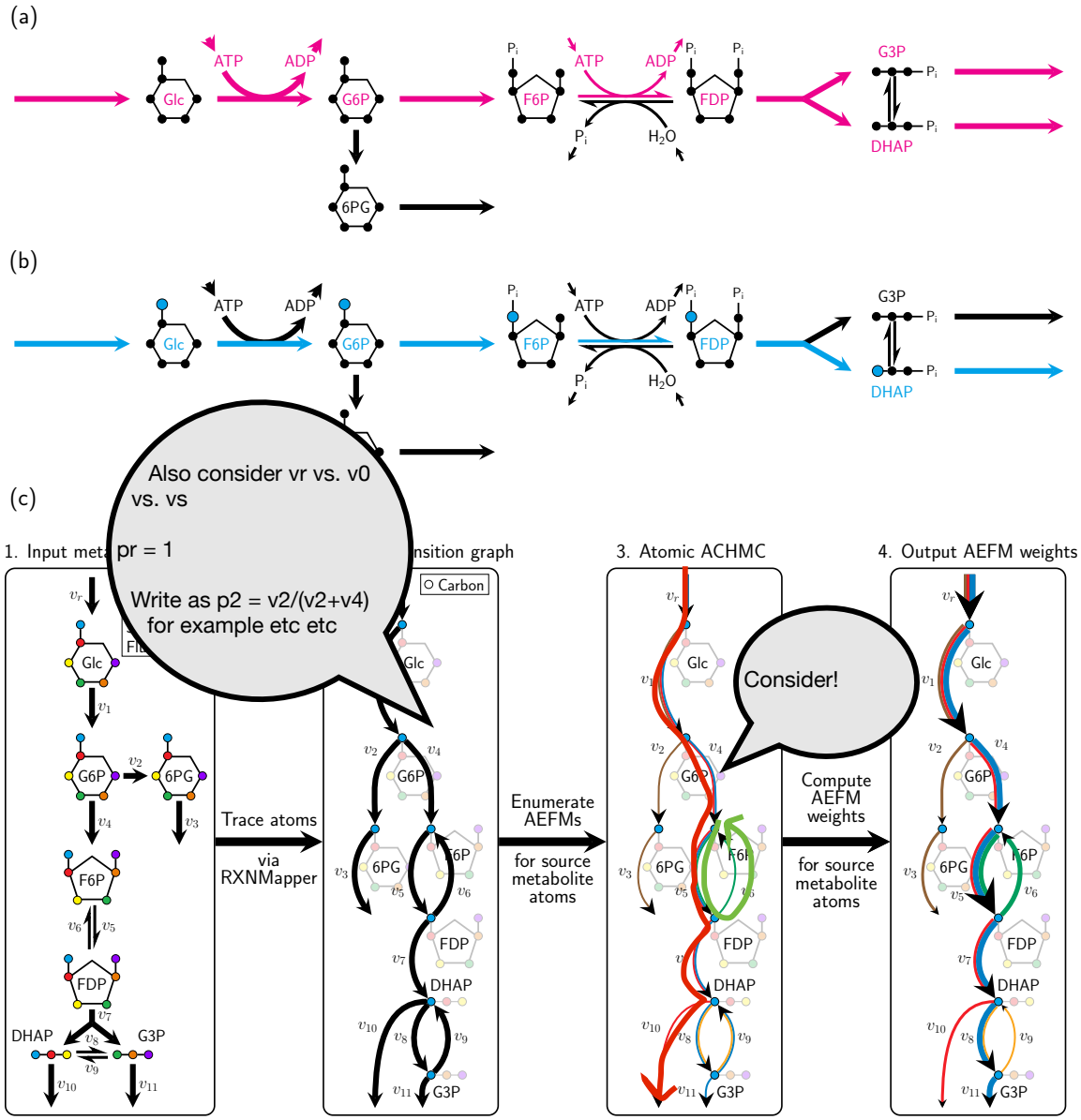

Figure 1: Atomic cycle-history Markov chain (ACHMC) pipeline. (a) An example molecular EFM in glycolysis. (b) An example AEFM tracing the flow of a given glucose carbon in glycolysis. (c) The major steps within our pipeline to enumerate AEFMs and compute their weights.

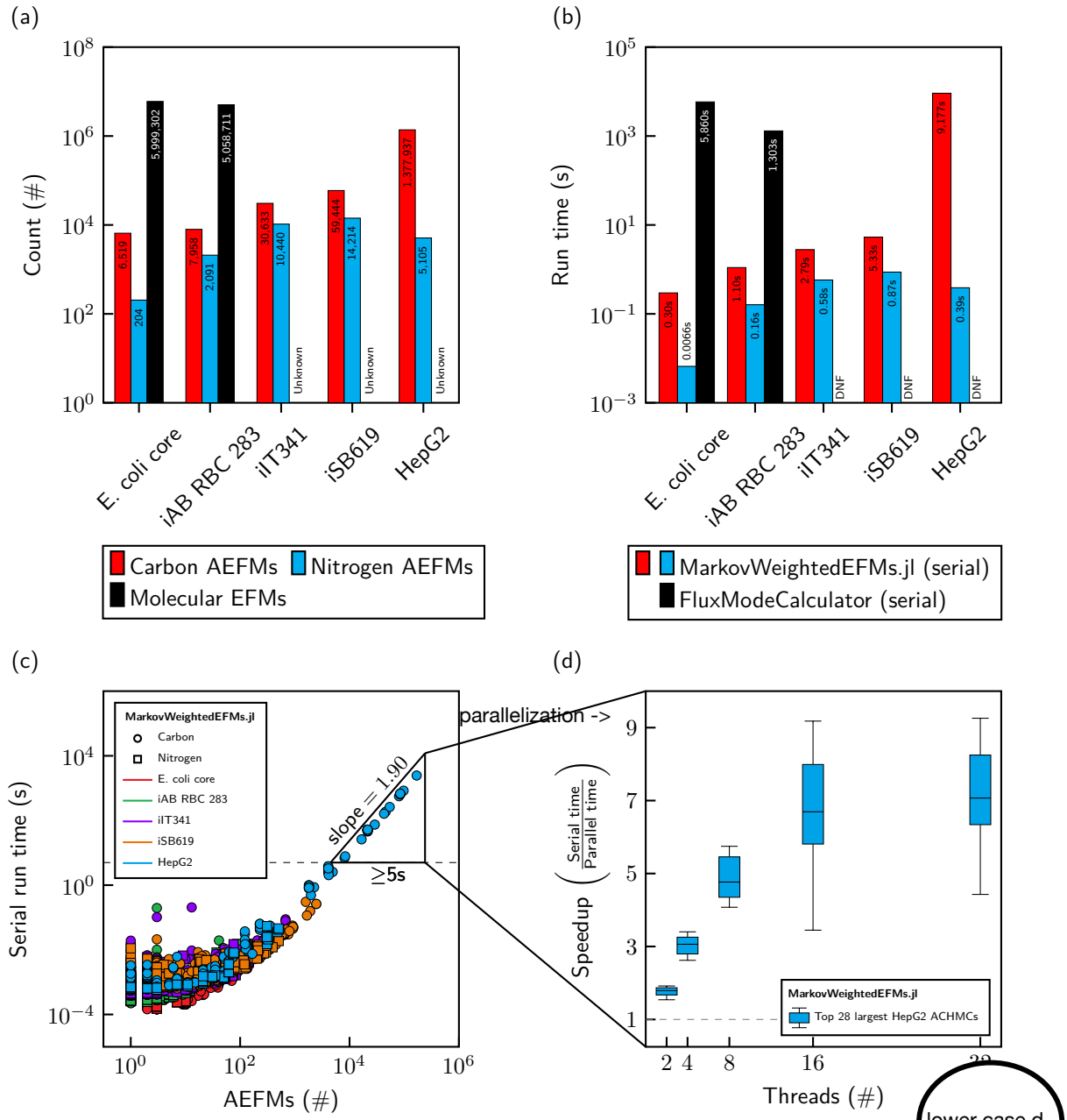

Figure 2: AEFMs are computationally tractable compared to molecular EFMs in five [illegible] (a) Number of atomic and molecular EFMs in the five GEMs. (b) The run time of [illegible] MarkovWeightedEFMs.jl method versus FluxModeCalculator running in serial. (c) Serial run time scaling of MarkovWeightedEFMs.jl as a function of the number of atomic EFMs. (D) Speedup of selected ACHMCs as a functional of additional threads.

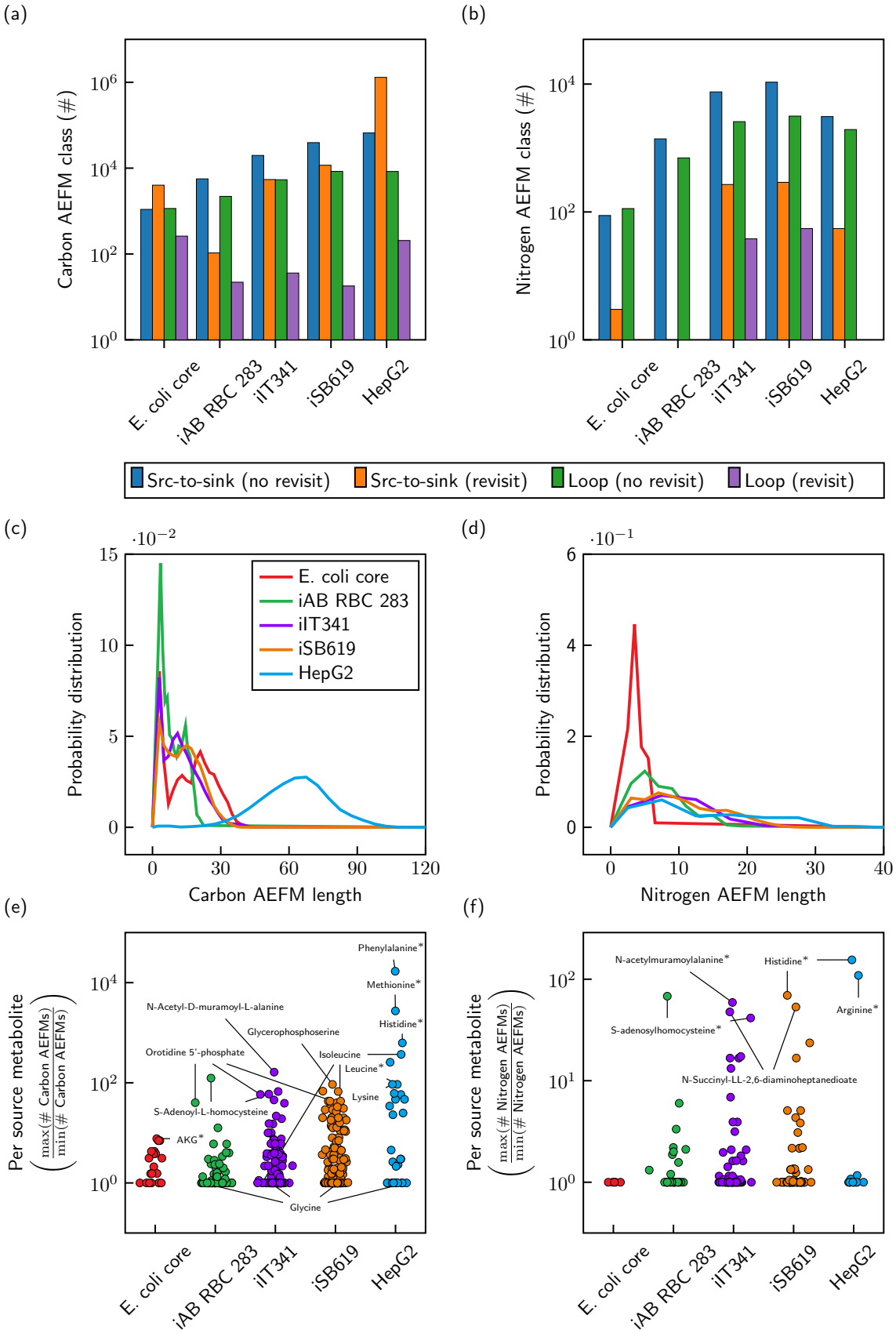

Figure 3: Structural analysis of AEFMs in five genome-scale metabolic models. (a-b) Categories of carbon and nitrogen EFMs. (c-d) Distribution carbon and nitrogen AEFM lengths. (e-f) Ratio of the greatest and smallest number of AEFMs between carbons and nitrogens within the same source metabolite. Representative metabolites from each dataset are labelled; labels with asterisks indicate that metabolite is also present in other networks.

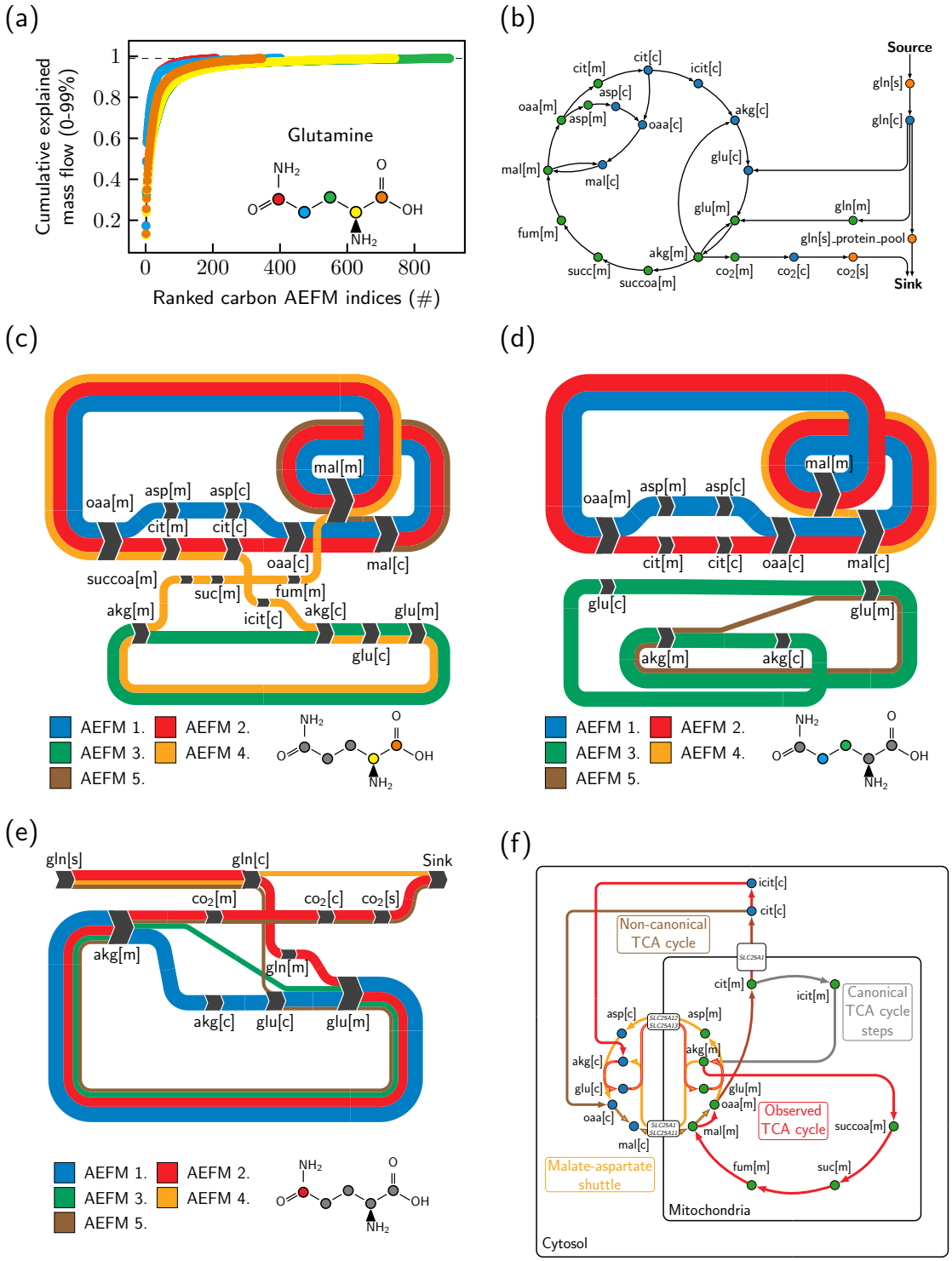

Figure 4: Carbon AEFM weight analysis of the HepG2 metabolic flux network. (a) A small number of highly active AEFMs explain the majority of glutamine flow. (b) Subnetwork of the top five AEFMs across each glutamine carbon collapsed onto metabolites. (c-e) Sankey diagrams of the top five glutamine carbon AEFMs. (f) Schematic mapping AEFMs onto traditionally defined metabolic pathways/subsystems. All metabolite names are labelled following the BiGG database nomenclature.