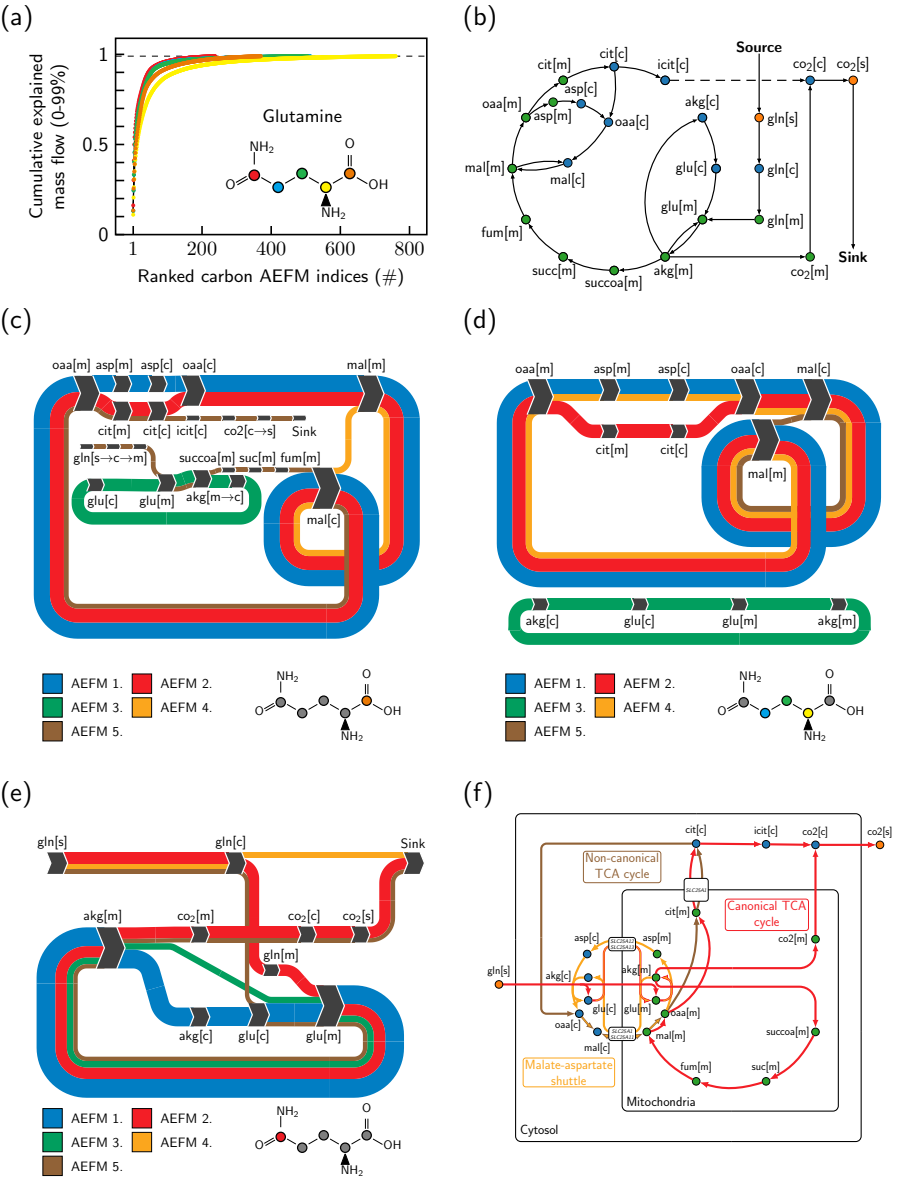
(a)
Cumulative explained mass flow (0-99%)
Ranked carbon AEFM indices (#)
Glutamine
(b)
Source
Sink
cit[m]
cit[c]
icit[c]
co2[c]
co2[s]
asp[c]
asp[m]
oaa[m]
oaa[c]
akg[c]
gln[s]
mal[m]
mal[c]
glu[c]
gln[c]
glu[m]
gln[m]
fum[m]
succ[m]
succoa[m]
akg[m]
co2[m]
(c)
oaa[m] asp[m] asp[c] oaa[c]
mal[m]
cit[m] cit[c] icit[c] co2[c→s] Sink
gln[s→c→m]
succoa[m] suc[m] fum[m]
glu[c] glu[m] akg[m→c]
mal[c]
AEFM 1.
AEFM 2.
AEFM 3.
AEFM 4.
AEFM 5.
(d)
oaa[m] asp[m] asp[c] oaa[c] mal[c]
cit[m] cit[c]
mal[m]
akg[c] glu[c] glu[m] akg[m]
AEFM 1.
AEFM 2.
AEFM 3.
AEFM 4.
AEFM 5.
(e)
gln[s]
gln[c]
Sink
akg[m]
co2[m]
co2[c]
co2[s]
gln[m]
akg[c]
glu[c]
glu[m]
AEFM 1.
AEFM 2.
AEFM 3.
AEFM 4.
AEFM 5.
(f)
cit[c]
icit[c]
co2[c]
co2[s]
Non-canonical TCA cycle
SLC25A1
cit[m]
Canonical TCA cycle
co2[m]
asp[c]
SLC25A13
SLC25A12
asp[m]
gln[s]
akg[c]
akg[m]
glu[c]
glu[m]
oaa[m]
oaa[c]
SLC25A11
mal[m]
mal[c]
succoa[m]
Malate-aspartate shuttle
fum[m]
suc[m]
Mitochondria
Cytosol