ITEM	PART NAME	QTY

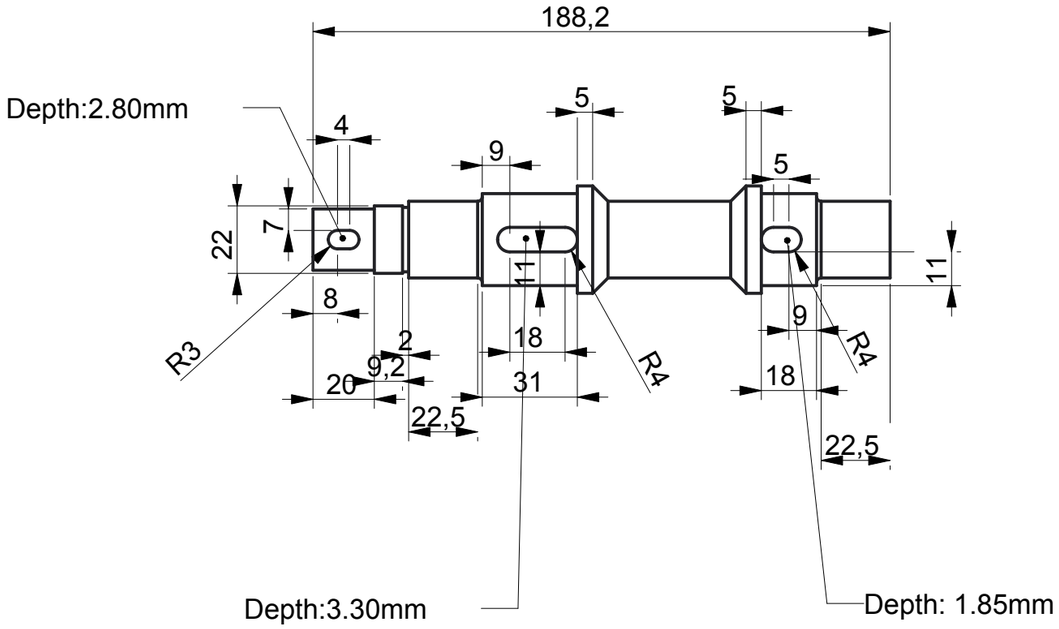

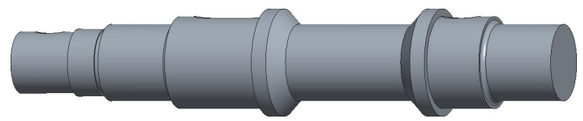

Material: AS1443

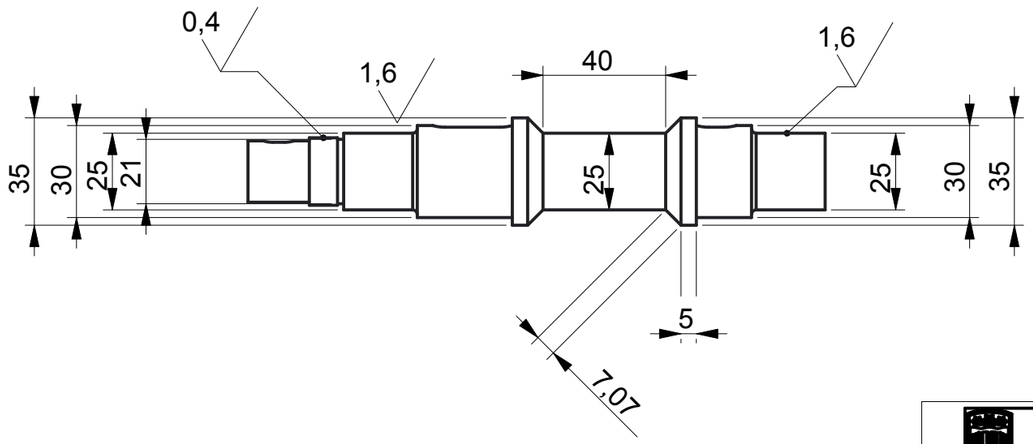

SYM	REVISION	DATE	APPD

DRAWN BY	Devin Yasas Devendra	SIZE A3	TITLE SHAFT_2	REV 1
DATE	Oct-27-17			
DIMENSIONS IN MILLIMETRES		SCALE 0,5:1	DWG NO. 3	SHEET 1 OF 1