ITEM	PART NAME	QTY

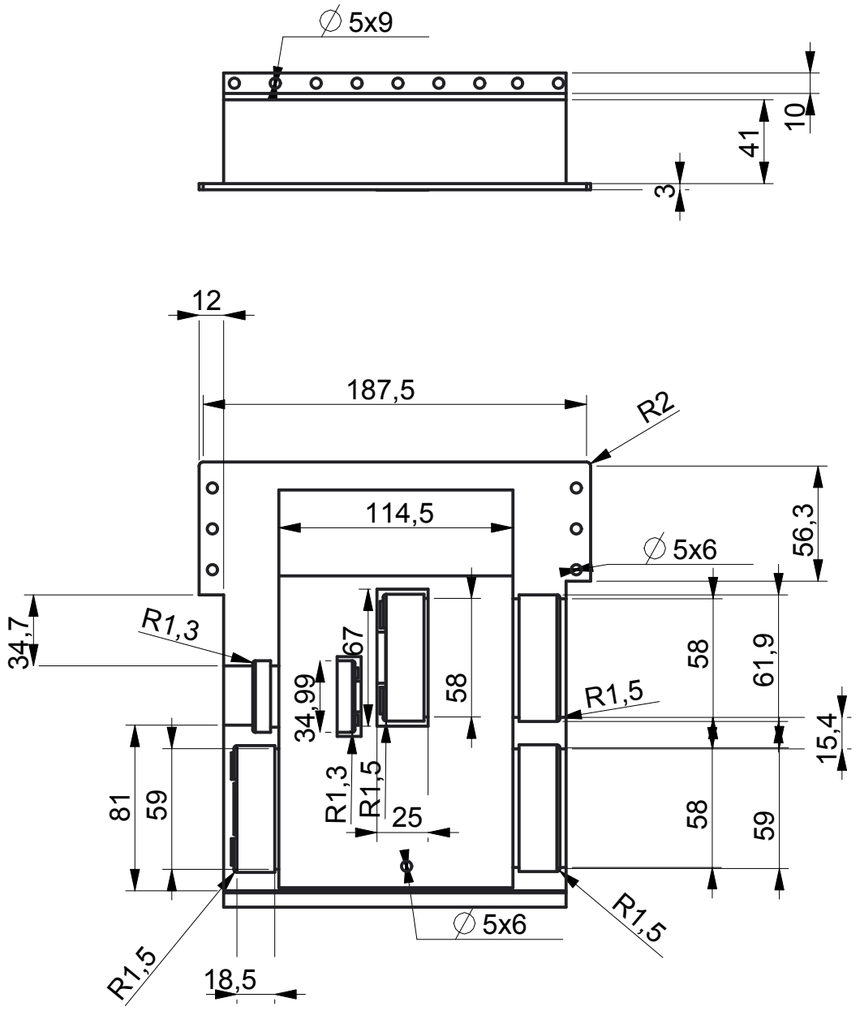

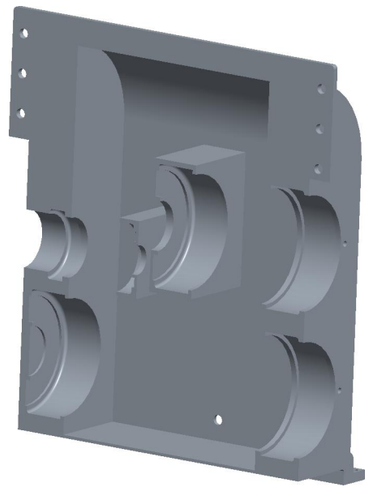

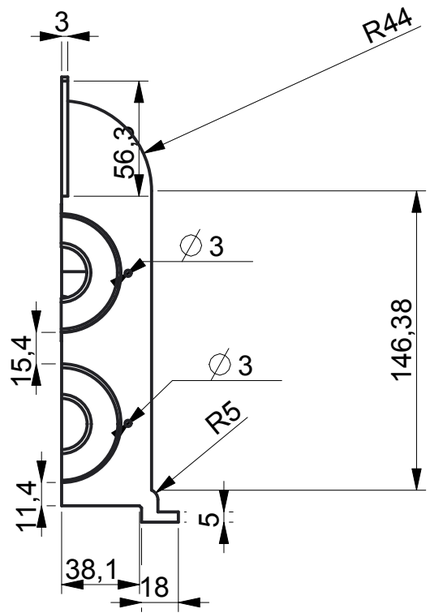

SYM	REVISION	DATE	APPD

DRAWN BY	Devin Yasas Devendra	SIZE	TITLE	REV
DATE	Oct-27-17	A3	HOUSE_RIGHT	1
DIMENSIONS IN MILLIMETRES		SCALE 0,3:1	DWG NO. 20	SHEET 1 OF 1