ITEM	PART NAME	QTY

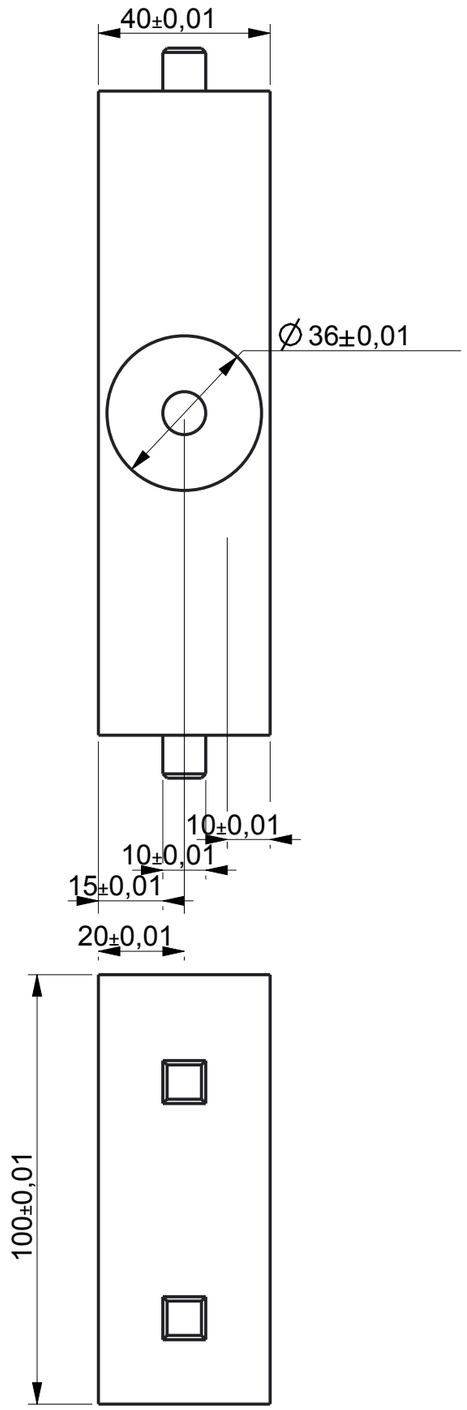

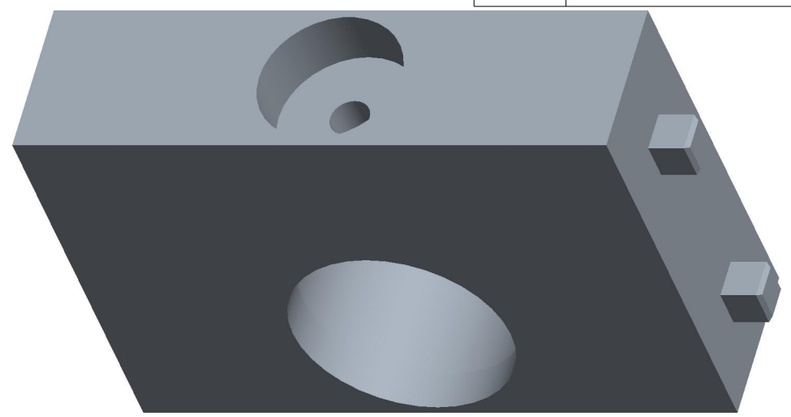

NOTE: ALL RADI MUST BE BLENDED SMOOTHLY, AVOID
AND TOOL STEP MARKS FOR SMOOTH BEARING INTERFERANCE FIT
AND OIL FLOW.

MATERIAL: HIGH CARBON STEEL

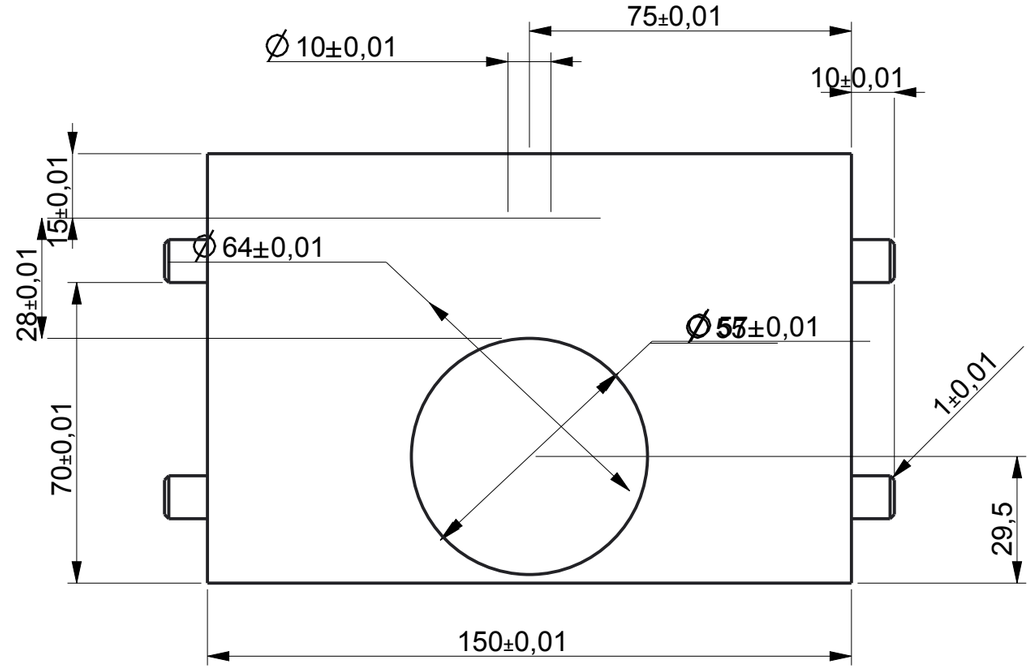

SYM	REVISION	DATE	APPD

UNIVERSITY OF WOLLONGONG AUSTRALIA

DRAWN BY	JEROME	SIZE	TITLE	REV
DATE	Oct-27-17	A3	TOP_CHUCK	V1
DIMENSIONS IN MILLIMETRES		SCALE 0,7:1	DWG NO. 1	SHEET 1 OF 1