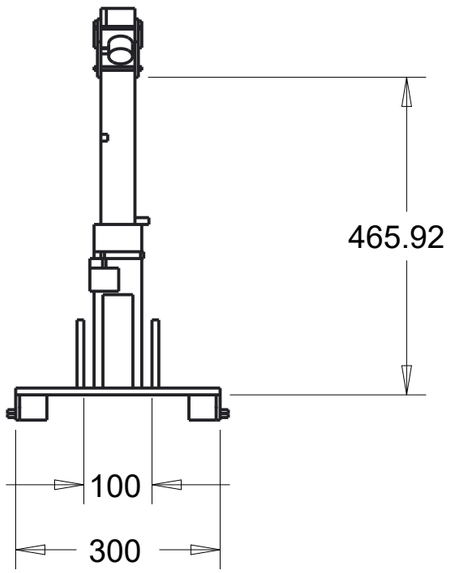

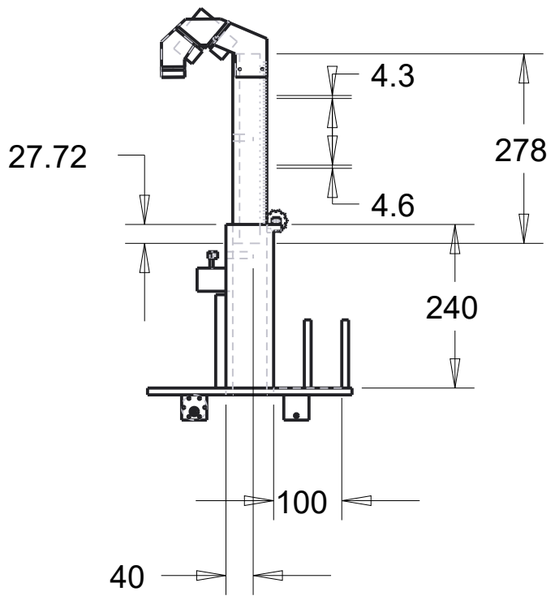

ITEM	PART NAME	QTY
1	BATTERY	1
2	BED	1
3	HEAD_ASSEMBLY_V2	1
4	INNER_TUBE	1
5	LOCKING_BAR	1
6	LOCKING_MOTOR	1
7	OUTER_TUBE	1
8	TELESCOPE_GEAR	1
9	TELESCOPE_MOTOR	1
10	TRACK_FREE_MOUNT	2
11	TRACK_MOTOR	2
12	TRACK_MOTOR_MOUNT	2

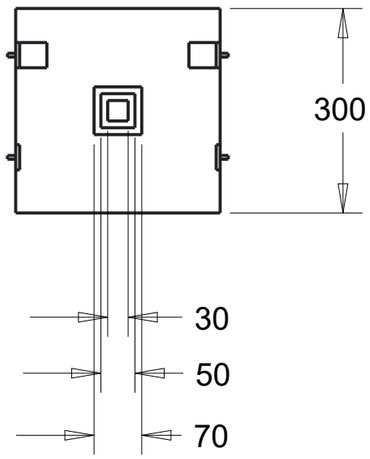

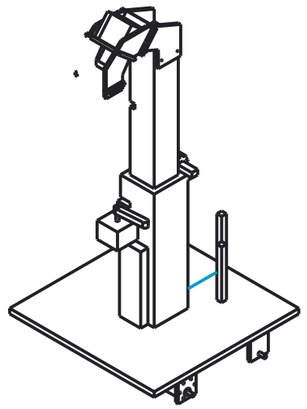

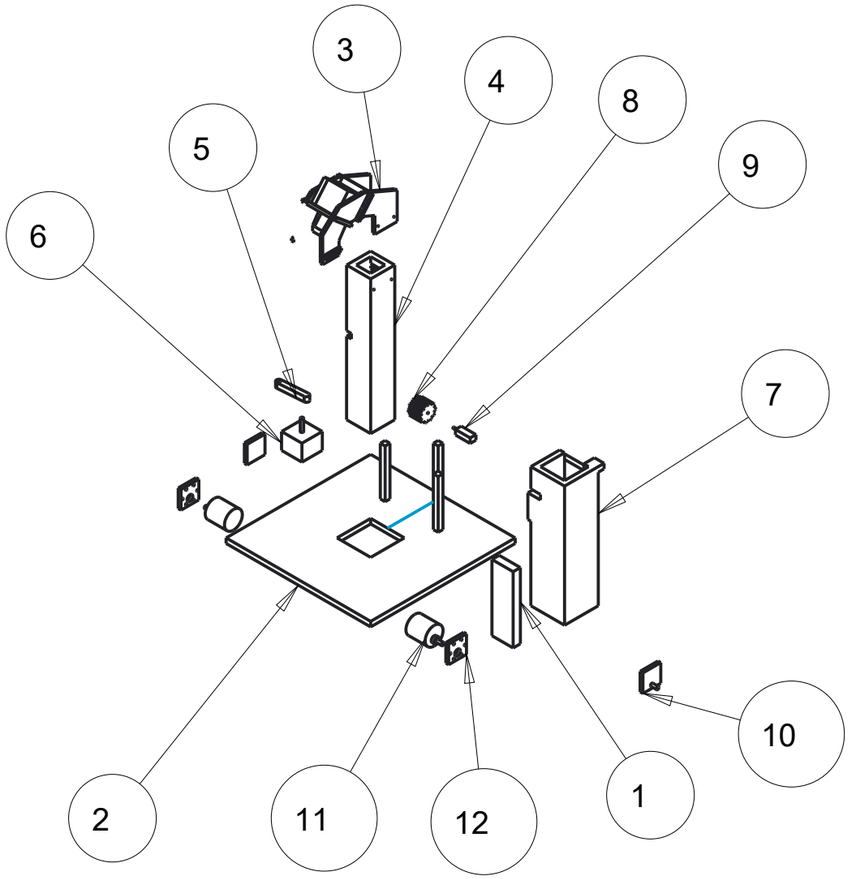

SYM	REVISION	DATE	APPD

DIMS IN mm	DRAWN BY		SIZE A3	TITLE ROBOT	REV 1
TOLERANCES	STUDENT #				
	DATE	Aug-27-16	SCALE 0.1:1	DWG NO. 1	SHEET 1 OF 1