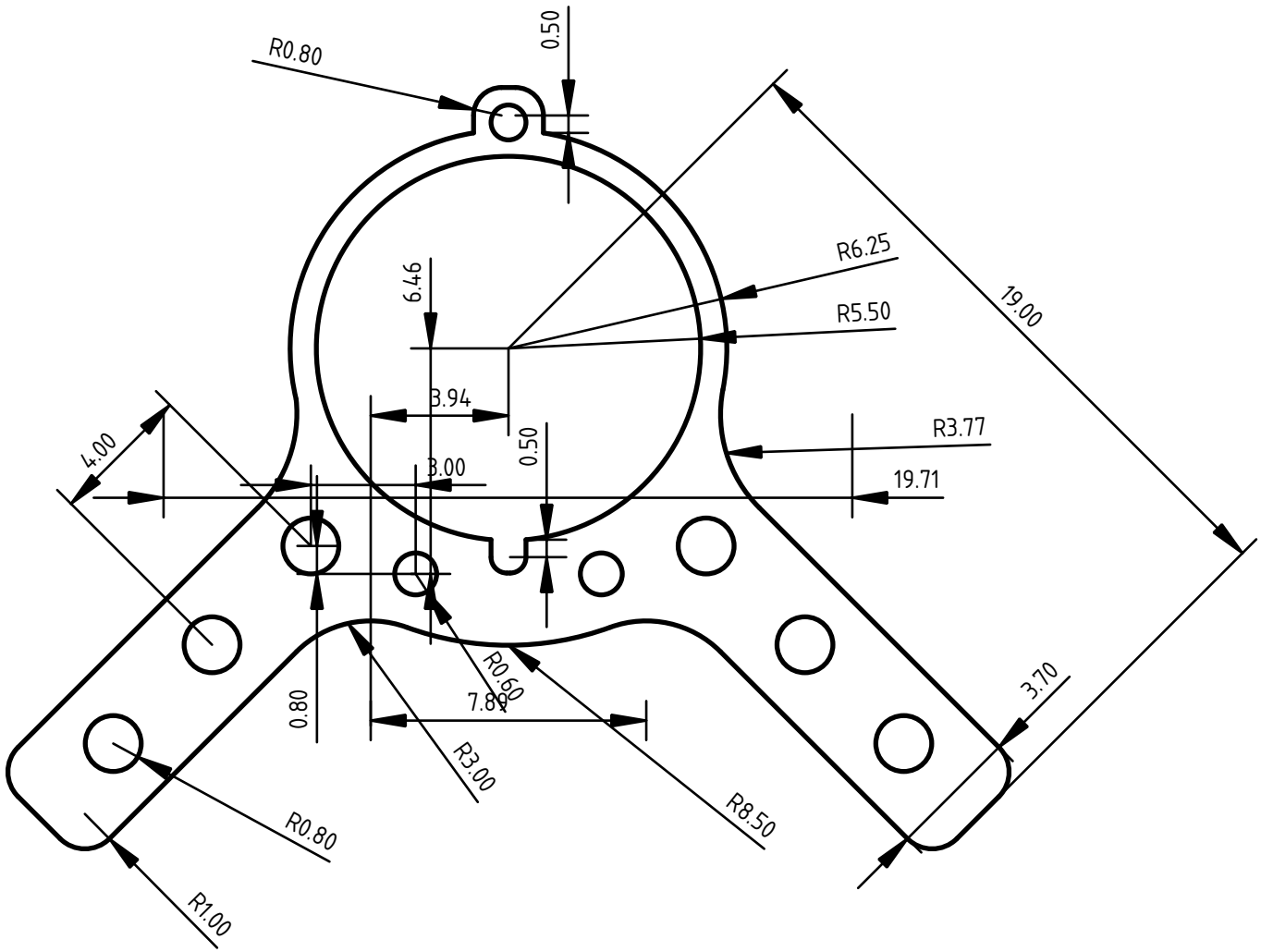

DESIGNED BY: Joao Couto DATE: 06-9-2021		Headbar 11mm ring		
SIZE A4				
SCALE 5	WEIGHT (kg) Weight	DRAWING NUMBER 001	SHEET 1	

This drawing is our property; it can't be reproduced or communicated without our written consent.

G	_
F	_
E	_
D	_
C	_
B	_
A	_