EVERYWHERE = NOWHERE = NOW

Compression & Release

by John-Clarence Prosper & Nat Nina

Cart360

Winter 2026

March 10th 2026

EVERYWHERE = NOWHERE = NOW

Context & Environment

Our device will exist in an installation piece context, but has the possibility to extend into a user's regular life. It aims to create a pause within a fast-paced, hyper-visual culture by offering an alternative mode of interaction through haptic and auditory feedback. The installation/device is made for individuals seeking a moment of self-awareness and mindfulness, encouraging them to engage with their body and senses at their own pace. In doing so, it positions itself against the dominance of screen-based interaction and centers instead slower, embodied modes of sensing. The user is not asked to watch or read anything; instead, they hold the object, feel it in their hand, and listen as their own state is translated into sound. Over time, this invites a shift from casually fidgeting with the device to noticing how their body and the artifact are in a continuous loop, each subtly influencing the other.

User & device

The device exists as a tool to foster a link between mind and body, allowing users to experience sustained self-awareness. Interaction is auditory and tactile, connecting the experience of touching and listening.

The senses

<u>Touch</u>

Touch is an important sense because it is directly linked to the vagus nerve, which affects the body's nervous system (heart rate, blood pressure, cortisol). This is why humans self-soothe through touch, and why toys like stress balls are used to heighten focus and reduce stress. We want this device to connect the user's body and consciousness, making touch a prime mediator between the two.

<u>Hearing</u>

Sound is the sense that activates the brain with the greatest speed and widest reach. This makes it great for output; the user rapidly discerns the feedback that they receive from the device. Because our goal is to stimulate a state of mindfulness, this feedback will reflect the user's input through pressure and light levels, which are translated into

sound in Max/MSP. This will allow the user to immediately be aware that their touch and the surrounding environment are shaping what they hear.

Sound can also light up nearly every region of the brain simultaneously; it engages the auditory cortex, the motor system, the limbic system and the hippocampus. Meditation as a process demands the participant's mind to narrow its focus towards a singular thing. This device could allow us to test meditation through sound.

Interoception

This last sense is not truly a sense, but has been written about in recent years by psychologists. It refers to the ability to sense internal signals like heartbeat, breathing and hunger. It is said that all those signals allow the brain to interpret mood. This is a useful definition because it reflects what we are aiming to develop with our device, even if, at this prototype stage, we only access interoception indirectly through how users choose to touch the device and attend to the sound.

Empowerment

This device aims to be helpful overall; the goal is to heighten one's awareness of their body, which is often neglected due to life's fast rhythm. The sound output by the device can be overwhelming and may create an unpleasant moment in the experience, but one's ability to control their bodily responses (for example by softening their grip or slowing down) will allow the sensations and output to subside. In that sense, the challenge is there to reveal that the user has some agency over how they feel and what they hear.

Communication Intentions

We want the device to quietly communicate that your internal state is real, noticeable, and worth paying attention to. By translating small bodily changes and changing light conditions into sound, it tells the user "this is what you feel right now" without judging or labelling it as good or bad. The intention is to show that technology does not only have to distract or speed things up; it can also act as a mirror that makes it easier to listen to oneself.

Interaction Design Strategy

The device communicates through cultural familiarity and output. The stress ball as an object is expected to bring heightened focus and calm. The feedback that the user receives through sound adds a layer to that interaction, transforming a familiar fidget into a small experiment in self-awareness. On a basic level, squeezing or holding the object changes the pressure sensor values and the light level around it, which Max/MSP turns into immediate sound responses; at a deeper level, repeated actions reveal one's internal state and one's ability to change it. The strategy is to start from something intuitive and low-friction, then slowly open up an experience where touch, hearing and interoception overlap. This allows the user to see themselves in a clear way that is both accessible and a bit challenging.

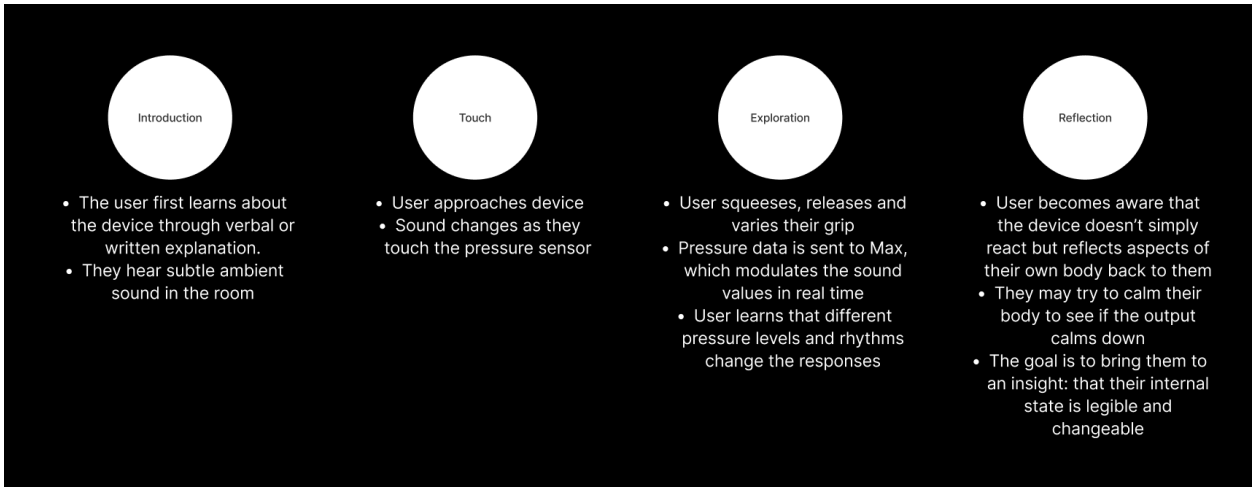

Sensors & Affordances

For this prototype, we scaled down to work with two simple sensors connected to Max/MSP: a pressure sensor (SparkFun Qwiic MicroPressure Sensor) and a photoresistor (light sensor). The pressure sensor detects how hard or soft the user is touching the object, and those values are mapped to the amplitude of the synth texture as well as the resonance of a filter through which pink noise is playing . The photoresistor senses the surrounding light level, allowing the system to subtly respond to the environment. This data is then used to control the playback of the partials of the synth texture. Together, these inputs let us explore how squeezing and context can become meaningful, legible input, and this scope of the project will allow us to test the best ways to incorporate these affordances into the experience.

3 similar projects

Reflect Orb
The Reflect Orb is a small, handheld biofeedback device that aims to calm users through touch. It measures heart rate and uses it to train the user's nervous system for better sleep and focus. It is a product dedicated towards wellness.

Pulse Topology
Pulse Topology is a piece by Rafael Lozano-Hemmer. Instead of being a focused device, it spreads out into an installation that illustrates the heartbeats of every participant interacting with the piece. This turns an intimate detail (one's heartbeat) into a shared experience.

Osmose
Osmose is an immersive VR piece where the main inputs are breath and balance. To navigate through this virtual world, the user must breathe and shift their weight while wearing a motion vest. This piece aims to make users aware of themselves as a body in space.

Why We're Different

Our project sits somewhere in between all these examples but doesn't attempt to be a commercial product or a dedicated performance. We're more interested in an experimentation between being and listening, which will interrupt the fast rhythms of everyday life and replace it with reflection and self-awareness, using only a pressure sensor, a light sensor, and sound as our main materials.

Photos

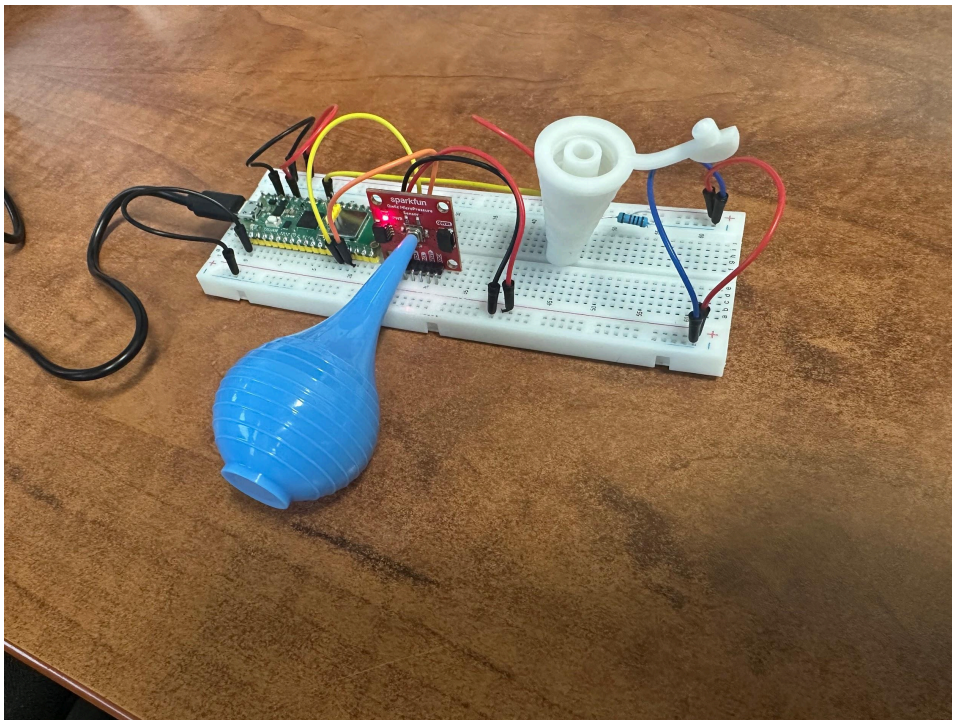

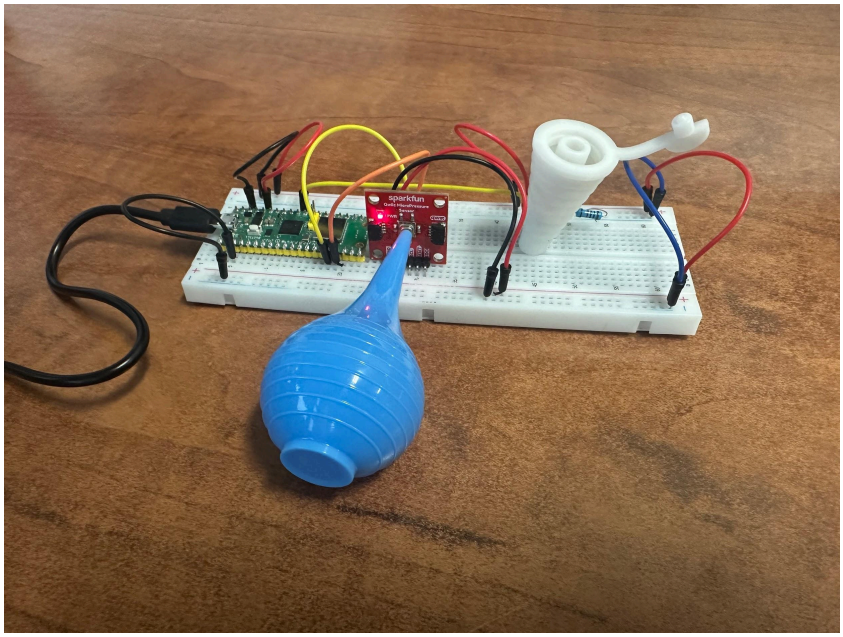

Circuit Diagram

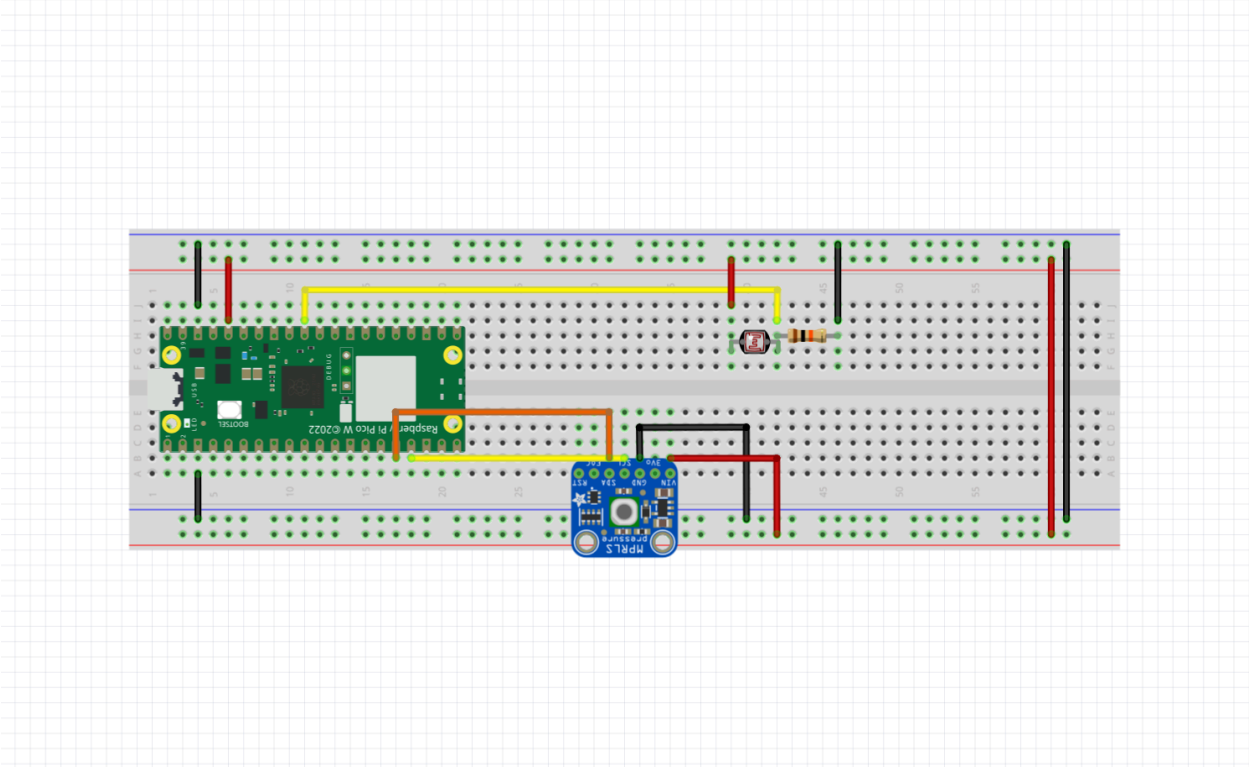

Note that in this diagram, the pressure sensor is an Adafruit MPRLS Ported Pressure Sensor, whereas the one used in the prototype is the SparkFun Qwiic MicroPressure Sensor. The functionality and connectivity remains the same.

Schematic Diagram

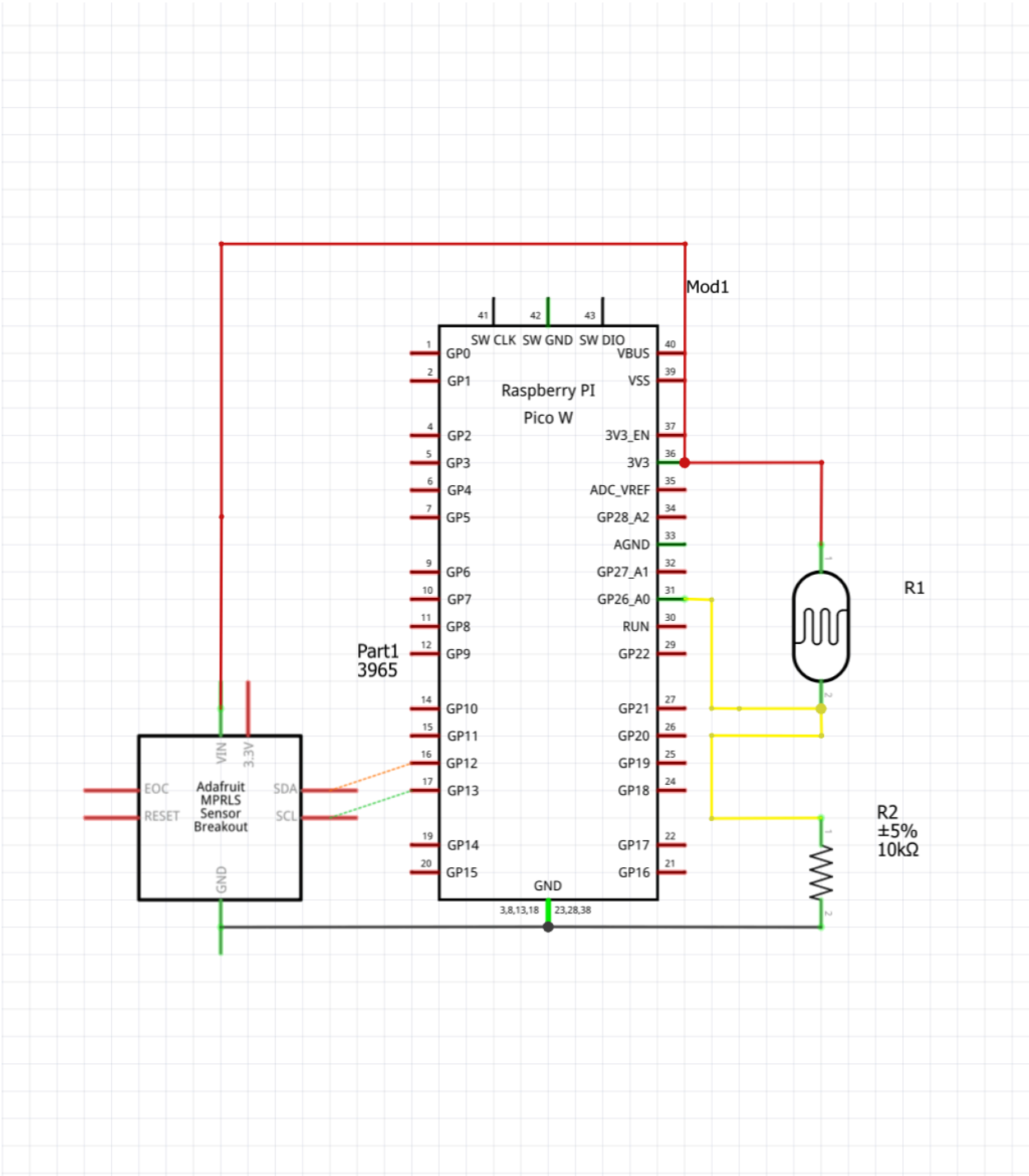

References

Eck, A. (2024, Spring). How music resonates in the brain. *Harvard Medicine Magazine*.

https://magazine.hms.harvard.edu/articles/how-music-resonates-brain

Klemm, W. R. (2011). Neural representations of the sense of self. *Advances in Cognitive Psychology, 7*, 16–30.

https://doi.org/10.2478/v10053-008-0084-2

Lozano-Hemmer, R. (2023). *Lumiere Festival*.

https://www.lozano-hemmer.com/pulse_topology.php

McDonough, M. (2024, Spring). Making sense of interoception. *Harvard Medicine Magazine*.

https://magazine.hms.harvard.edu/articles/making-sense-interoception

Davies, C. (1995). *Osmose*. Char Davies.

https://www.immersence.com/osmose

Paciorek, A., & Skora, L. (2020). Vagus nerve stimulation as a gateway to interoception. *Frontiers in Psychology, 11*, Article 1659.

https://doi.org/10.3389/fpsyg.2020.01659