CHARGING PART

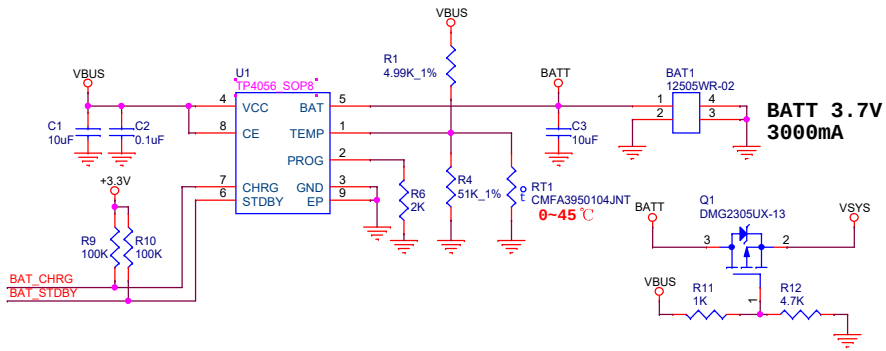

+5V

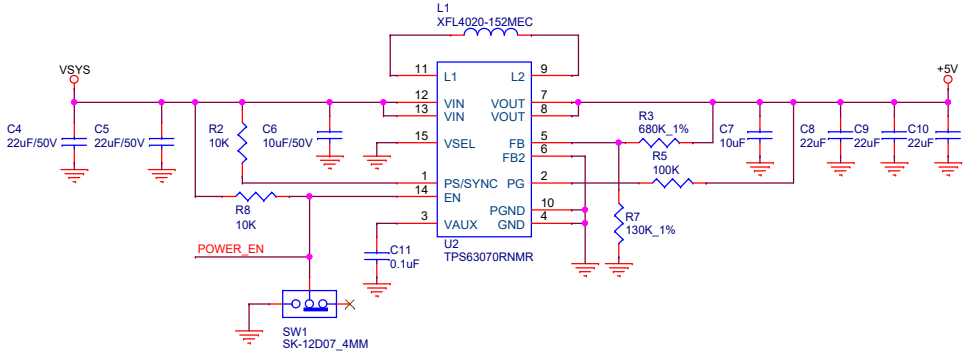

Raspberry Pi Pico W

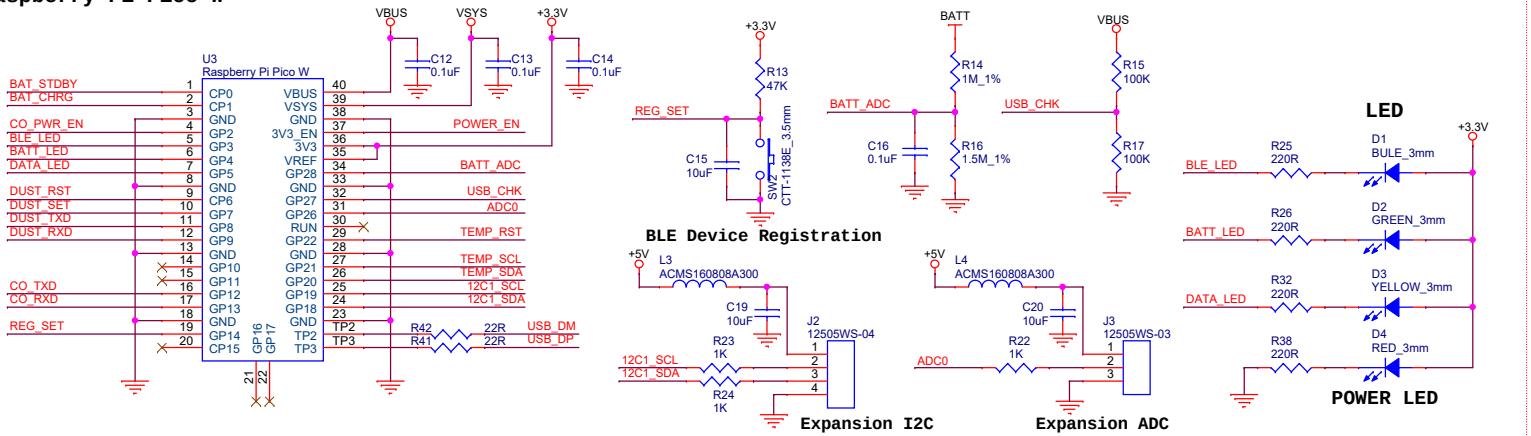

DUST PMS7003

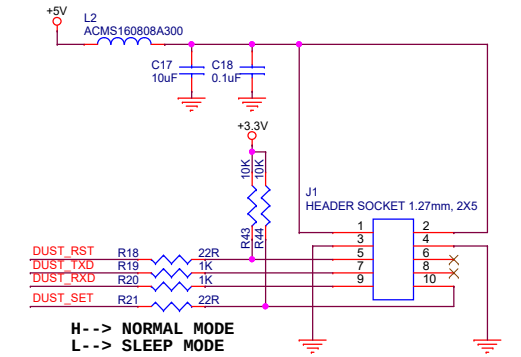

USB-C

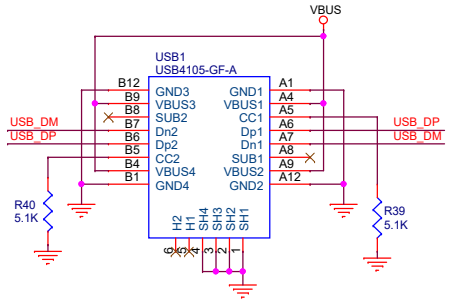

CO ZE07-CO

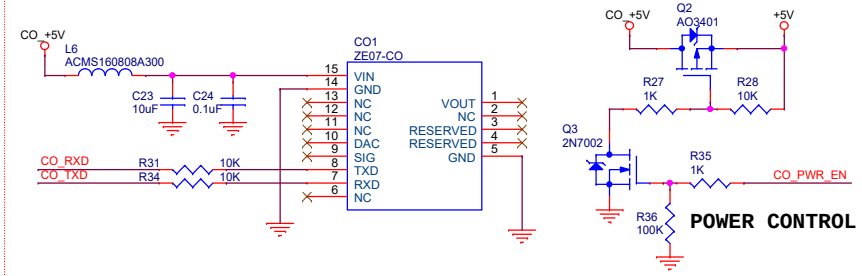

Temperature Humidity SHT31-DIS

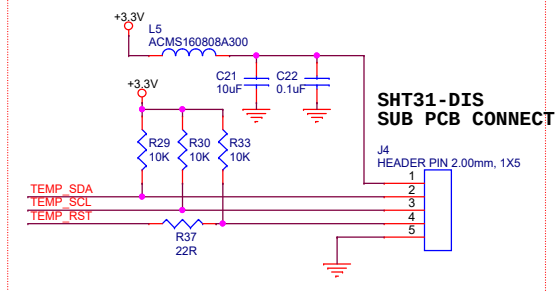

H1 H2 H3 H4

Title	AIR QUALITY SENSOR		
Size A3	Document Number MAIN		Rev V1.0
Date: Wednesday, December 31, 2025	Sheet 1 of 2		

Date: Wednesday, December 31, 2025 Sheet 1 of 2

5 4 3 2 1