MAE 3260 Final Groupwork

Group 3

Title: RC Sailboat Path-Following

Subtitle: Implementing Non-Linear Control Systems for Environment w/ Disturbances

Outline:
Page 1: cover page
Pages 2-9: any format you want in these pages, just include a few section headings in this outline)
Page 10: References

Abstract: This project models an rc sailboat and implements a control algorithm to guide the path of the sailboat along a predetermined set of waypoints. We decided on this project both because of a shared interest in sailing and because we were curious to explore the implementation of a control model for a more complex, non-linear system. The scope of the project extends from the definition of various parameters involved in the control of the boat, the modelling of system and performance constraints, and then to control system implementation and animation in MATLAB.

Students/Roles:

Student	Task/Role	Portfolio
Jake Dick (jdd249)	Assisted with the development of the script and developed physical & performance based constraints for the boat behavior.	Link to results in student's individual portfolio
Julius Goldberg (jlg445)	Developed the wind inputs using the Dryden Turbulence model.	
Will Hutter (wdh64)	Developed the script for the sailboat model.	
Emma Moore (ejm338)	Explained the context and explored future opportunities for the model.	

MAE 3260 concepts used:

- ODEs
- TFs
- Block Diagrams
- Steady State Behavior
- Feedback Control Law
- Command Following

Pages 2-9 include two pages for each student:

- Summarize technical work, including figures
- For references, use numbers/brackets (e.g. [1]) in text with list - IEEE citation format.
- Students can combine section (i.e. 4 pages for students A and B), but will get the same grade

Context

A sailboat is controlled via rudder, the steering mechanism of the boat, and the sail, the power mechanism of the boat. Both controls utilize lift to move the boat. In general, the rudder controls the direction change and speed of direction change, and the sail angle is tuned based on wind direction and heading, with the goal of maximizing lift.

Sailboats experience effects from many different variables in real-life situations. Any variations in wind and water conditions will affect the sailboat's heading and speed. Examples of these include: wind direction, wind speed, wind turbulence, water turbulence, waves, current, etc. In the reference model, the main variables considered in the system are wind speed and direction. Wind behavior in real-life can be highly dynamic, so we explore modeling wind variations, including turbulence, which would cause disturbance.

Sailboats also have unique limitations and constraints compared to a gas or electric powered vehicle. Since the boat utilizes lift for propulsion, certain rudder and sail angles can induce significant drag and affect sailboat performance. For example, a heading that is too close to the wind will call for a corresponding sail angle that induces too much drag to allow for forward motion. Due to this, there is a range of headings that a sailboat cannot utilize. This is also true for rudder angles, where angles that are too high will induce significant drag.

System Variables and Parameters

Name	Description
(x, y, θ)	boat position and orientation
v	boat velocity
ω	rate of rotation
f_s	wind force on the sail
f_r	water force on the rudder
δ_v	angle between the sail and the longitudinal axis
a	wind speed
ψ	wind orientation
σ	sheet tension indicator: $\sigma \geq 0$ means no sheet tension, else the sail is efficient
δ_s	maximum angle between the sail and the boat axis
δ_r	angle between the rudder and the boat axis

Name	Description
$\alpha_d = 0.5$	drift coefficient
$\alpha_v = 100$	longitudinalfriction coefficient
$\alpha_\omega = 6000$	rotational friction coefficient
$\alpha_s = 1750$	lift coefficient for the sail
$\alpha_r = 250$	lift coefficient for the rudder
$p_6 = 2m$	geometric property (see figure 2)
$p_7 = 2m$	geometric property (see figure 2)
$p_8 = 4m$	geometric property (see figure 2)
$M = 200kg$	mass
$J = 1000kg.m^2$	inertia

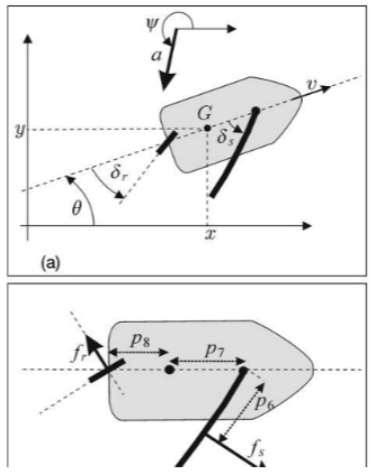

The system variables and parameters we elected to use were taken directly from the Clement research paper. We chose to model a 200kg sailboat with the geometric parameters described above. While these geometric parameters aren't representative of every sailboat, the conclusions we draw from our control algorithm should be generalizable to boats of varying performance and scales.

Control Algorithm Constraints

Before implementing and modelling the control algorithm of the sailboat, we must set boundaries on the control algorithm based on practical limitations of sailboat control.

We defined values for δ_{s_max}, the maximum allowable angle between the sail and the boat axis, and δ_{r_max}, the maximum angle between the rudder and boat axis. Based on research of typical sailboat performance, we opted for a δ_{s_max} of 90 degrees. It is unlikely that this constraint ever bounds our performance unless we are sailing directly downwind, but it is an important practical consideration to prevent the sail from hitting the stays (guy wires supporting the mast). For the maximum angle between the rudder and the boat axis, δ_{r_max}, we selected a value of 30 degrees. Beyond this value, the rudder will hit diminishing returns of steering force and will induce significant drag that we do not account for in our model.

Another constraint we discussed is the max sail angle (i.e., how close to the wind we will allow our boat to sail). Typical values for this parameter range from 30 - 60 degrees depending on sailboat

characteristics, with performance sailboats achieving lower angles. We chose not to define a constraint for maximum sail angle because this can be determined by the other parameters of our system. For example, if our control algorithm commands a direction 10 degrees from the wind, the boat will be “in-irons,” and the model will implicitly prevent forward progress.

Wind Characterization

To account for the complexity of actual wind conditions, we decomposed the wind into two different layers, a constant base wind and then a turbulent layer. Our model requires inputting a base wind speed and direction, and then gives the option to overlay colored noise in addition with a 2-D Dryden Wind Turbulence Model. This model treats components of continuous gusts

This model takes in parameters for the wind, turbulence, and timespan and then outputs values for the longitudinal and cross-wind turbulence contribution.

Inputs		
Parameter	Definition	Rationale
seed	The grounding point for a random number generator	Repeatable random outputs for testing
N	The number of cycles to run the model for	To set the length of the simulation
dt	The time between cycles	To define the quality of the simulation
u_{base}	The speed of the base wind	The basis for the boat propulsion and turbulence intensity
TI	The ratio of the turbulence RMS speed to the mean wind speed	Rather than having a separate value for the velocity of the turbulence, we use the ratio to ground the value.
L_u	The length scale of the longitudinal turbulence	The length scale determines how fast fluctuations evolve. The longitudinal and cross-wind are separate because the two have different ranges of typical values and are encoded differently in the Dryden model.
L_v	The length scale of the cross-wind turbulence	-

Outputs		
Parameter	Definition	Rationale
u_{turb}	Longitudinal turbulence	Isolating the two turbulences from the base wind speed can help us separate the disturbance from the input.
v_{turb}	Cross-wind turbulence	-

It’s quite a lot to include for the purpose of this group work, but the Dryden Model is provided as a power spectral density function, but can be rewritten as an ODE by rewriting the PSD as a transfer function.

$$\Phi(\omega) = |G(j\omega)|^2$$

From the transfer functions, we can obtain the ODEs for the longitudinal and cross-wind ODEs:

$$\frac{du}{dt} = -\frac{u_{mean}}{L_u}(u) + \sigma_u\sqrt{\frac{2u_{mean}}{L_u}}\,w(t)$$

$$\frac{d^2v}{dt^2} + 2\left(\frac{u_{base}}{L_v}\right)\left(\frac{dv}{dt}\right) + \left(\frac{u_{base}}{L_v}\right)^2(v) = \sigma_v\sqrt{\frac{3u_{mean}}{L_v}}\,w(t)$$

These ODEs then get integrated over the periods that are defined by N and dt for the outputs.

As an example, given the inputs of N = 300, dt = 0.1 seconds, U_{base} = 5, $theta_{base}$ = 100 degrees, TI = 0.1, L_u = 100, L_v = 50, seed = 100000

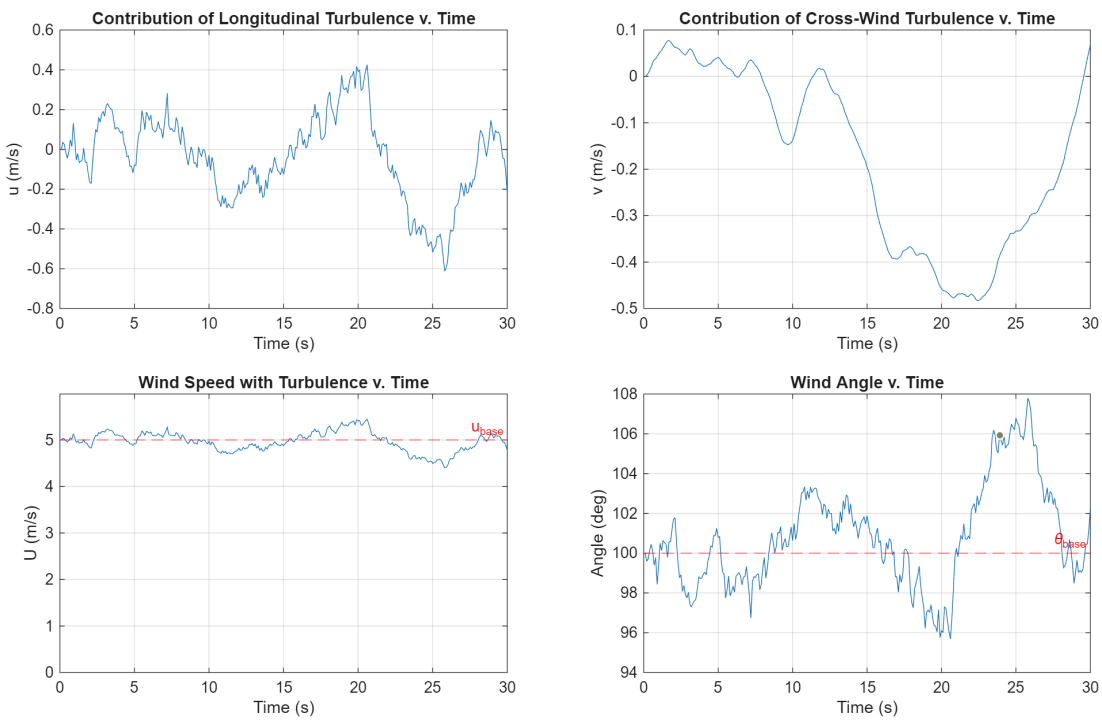

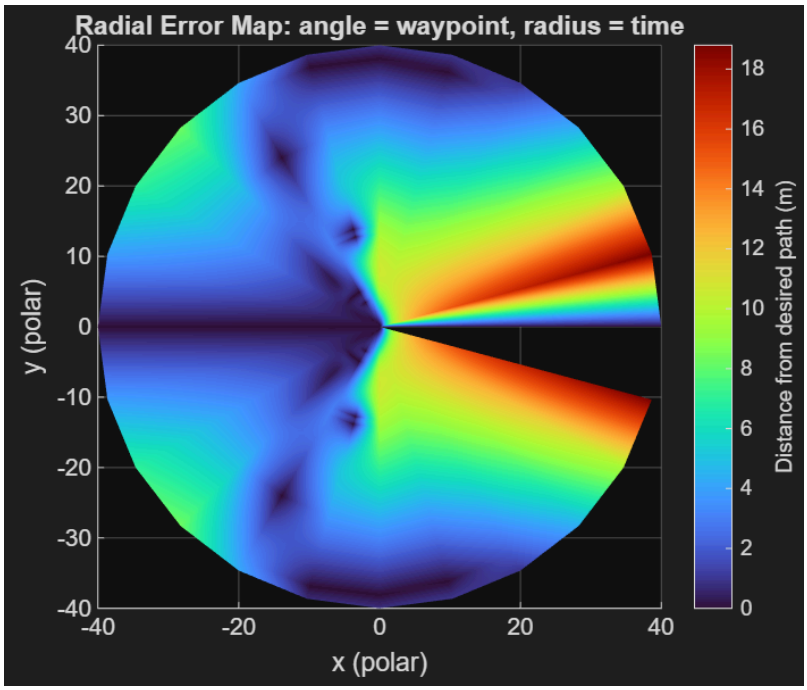
Radial Error Map: angle = waypoint, radius = time
y (polar)
x (polar)
Distance from desired path (m)
40
30
20
10
0
-10
-20
-30
-40
-40
-20
0
20
40
18
16
14
12
10
8
6
4
2
0

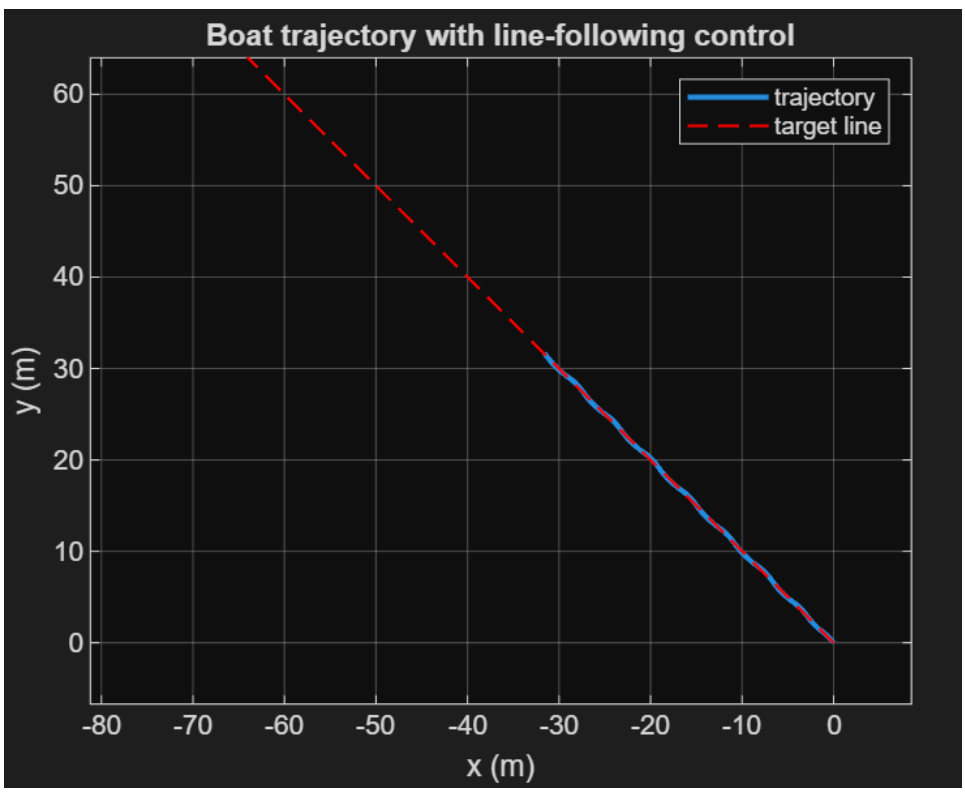
Boat trajectory with line-following control
trajectory
target line
y (m)
x (m)
60
50
40
30
20
10
0
-80
-70
-60
-50
-40
-30
-20
-10
0

Control Law

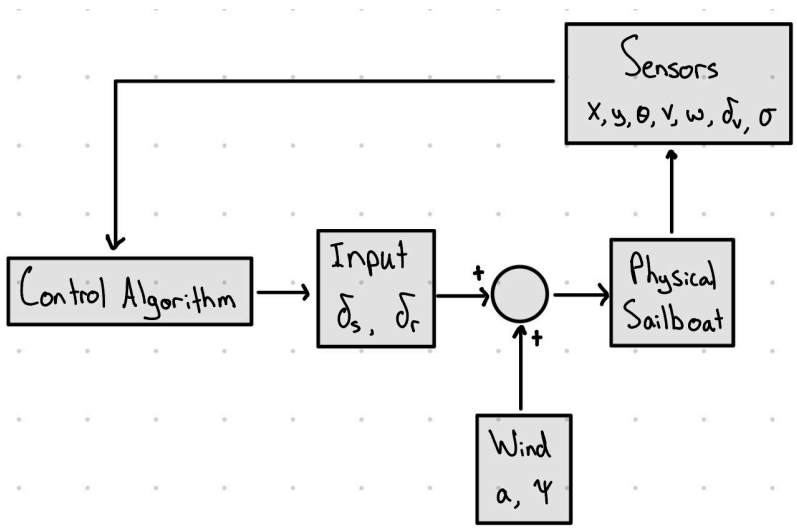

The block diagram drawn above describes the system at a high level. The control algorithm takes as input the sailboat position, velocities, and geometric information about the sail and outputs values for the desired sail position and rudder position. Combining these two variables with information about the wind and the geometric parameters of our sailboat, our model is able to accurately predict how the physical sailboat will respond. Several sensors on the sailboat are used to obtain information about its position, velocity, and sail geometry, which then feeds back into the control algorithm.

[Here it would be good to talk about the equations themselves, how they're being numerically integrated. It would be helpful to describe lambda and maybe connect that to a proportional input?]

Results

[Maybe a brief run through of the code, then an example of the implementation]

Next Steps

Given the model that we have, it would be interesting to optimize the behavior of the boat for a certain set of performance parameters. For example, if we could define a situation such as a race versus an autonomous security vehicle, the guiding inputs would be vastly different. Changing the parameters such as lambda or even changing the overall physical abilities of the vehicle would yield interesting insights into the limitations of this model and the potential for different operational efficiencies.

Additionally, this model focused primarily on the heading of the sailboat due to limitations on time and resources. However, in future iterations it would be interesting to add additional waypoints to the model

and figure out how to interpolate between them so that the splines are smooth and the boat follows the path as accurately as necessary.

Finally, adding in other autonomous features such as obstacle avoidance or detection and classification could make the model more usable in real-world settings such as security, marine biology study, or ocean debris classification.

References

B. Clement, “Control Algorithms for a Sailboat Robot with a Sea Experiment,” *Proc. 9th IFAC Conf. Control Applications in Marine Systems*, Osaka, Japan, Sept. 17–20, 2013, pp. 19–10, doi: 10.3182/20130918-4-JP-3022.00061.

P. Abichandani, D. Lobo, G. Ford, D. Bucci and M. Kam, "Wind Measurement and Simulation Techniques in Multi-Rotor Small Unmanned Aerial Vehicles," in IEEE Access, vol. 8, pp. 54910-54927, 2020, doi: 10.1109/ACCESS.2020.2977693.