Hinge Design

2025 DAVID MALAWEY – SCUTTLE ROBOTICS

A parametric hinge design as a case study for best practices in open-source design

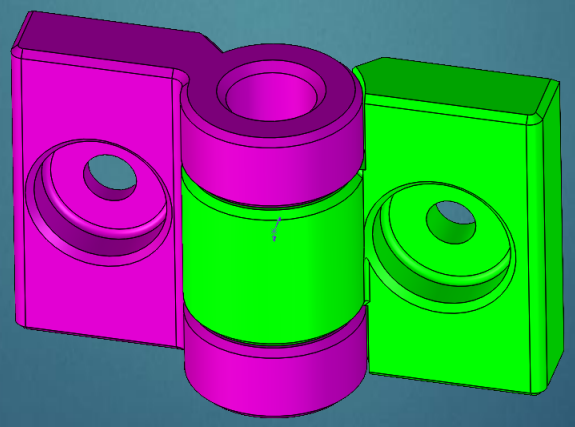

© 2025 OpenLabProject

revision 2025.09

qr.net/openlabproject

Contents

A Combined Lesson for the topics of:

- Design for 3D Printing
- Parametric Design
- Design of a hinge
- Open Source Design Strategy
- Application of Best Practices
- ~~How to use Solidworks~~

The included slides answer the following questions about this hinge design

- How does 1 model include multiple bodies?
- What are the variants of the hinge design and the purpose of each?
- What is the desired gap between bodies and printing tolerance?
- How do we control the friction of the hinge using fasteners?
- How can you make a double hinge from this design? (2 degrees of freedom)
- What are the key parameters that can be adjusted?
- What are the standards used in this model for overall design-for-printing?

Bodies

Fixed Body
(hinge arms)

Pivot Body
(hinge grip)

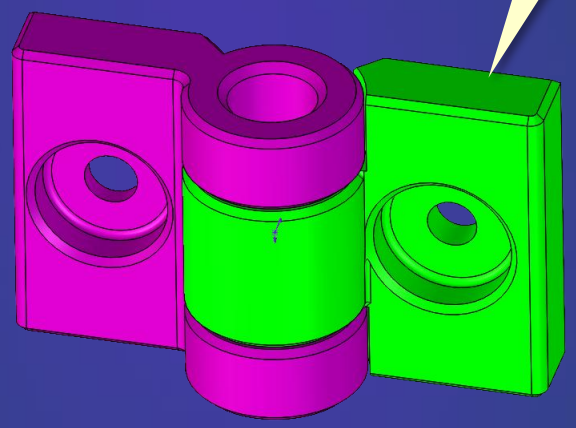

- the side we call "fixed" is the side with two arms.
- for 1DOF hinges, the purple part is fixed to an assembly and the green part pivots with a module.
- for 2DOF hinges, the purple is fixed to the main assembly, and opposing purple is fixed to a module, and green part is not fixed to any module.

Bodies Identification

- two colors for opaque plastic, with texture
- originating from PW-MT11050

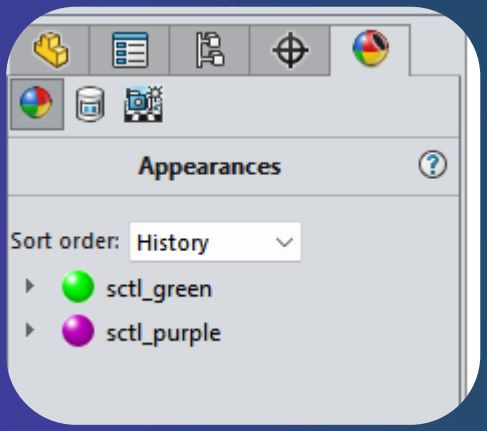

- default location of custom materials:
- c\programdata\solidworks 2022\custom materials

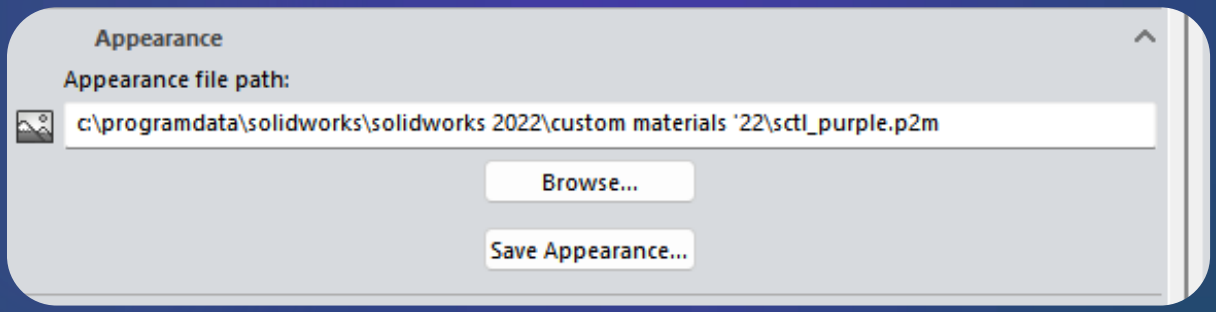

Solid Bodies

- The model features two "bodies"
- An air gap exists between solids in this model – the bodies do not contact
- pivoting body is indicated with green color

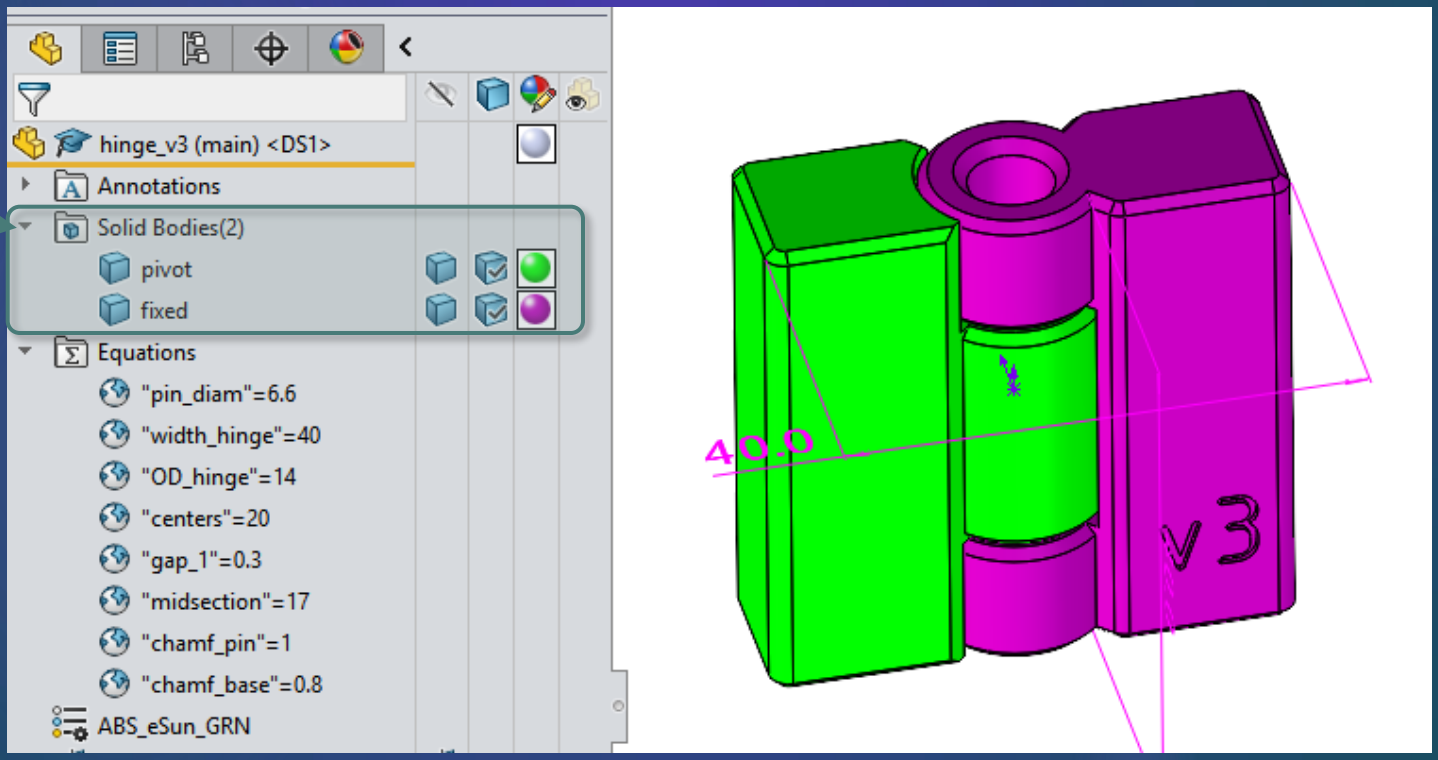

Solid Bodies 2

- bodies are formed when a solid is cut and separated.
- names can be assigned only after the cut feature in the feature tree sequence.

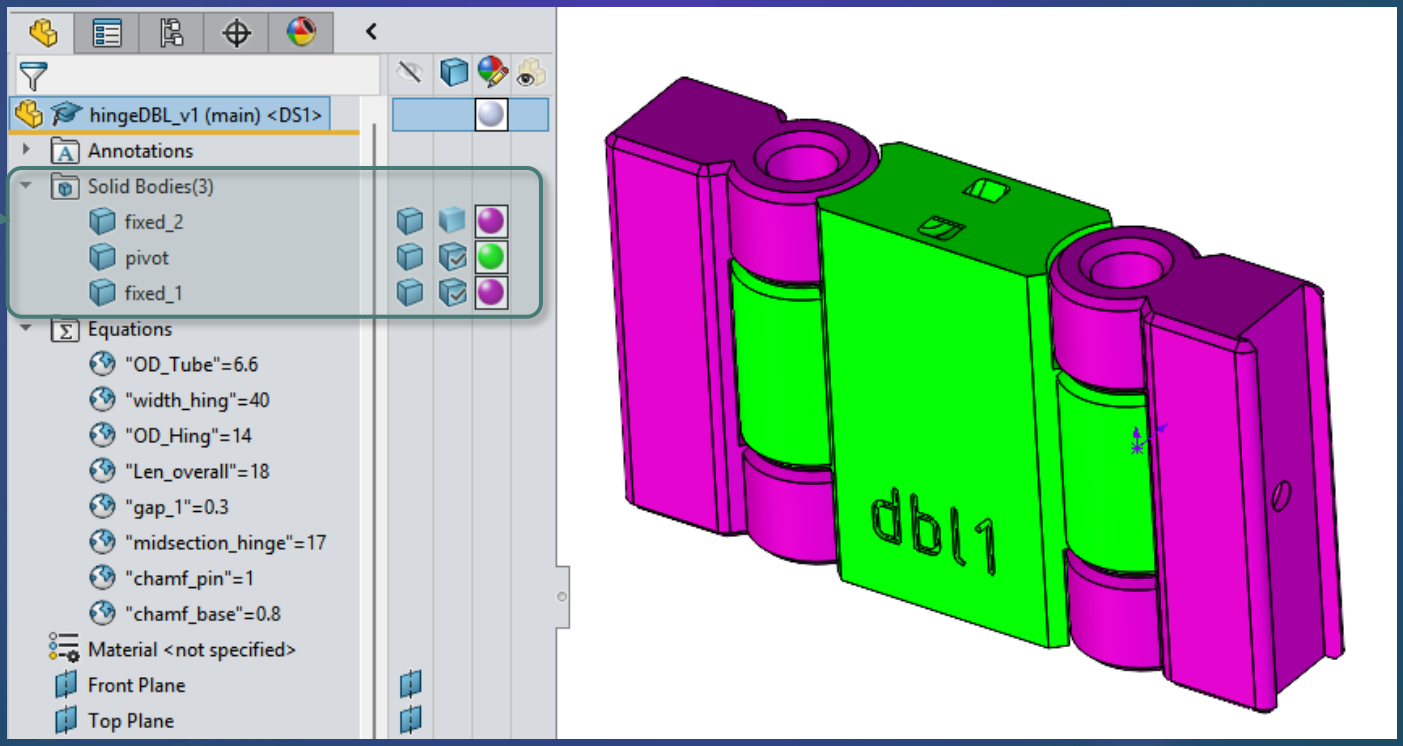

Hinge v3

- hinge v3: for bodies matching to hinge thickness

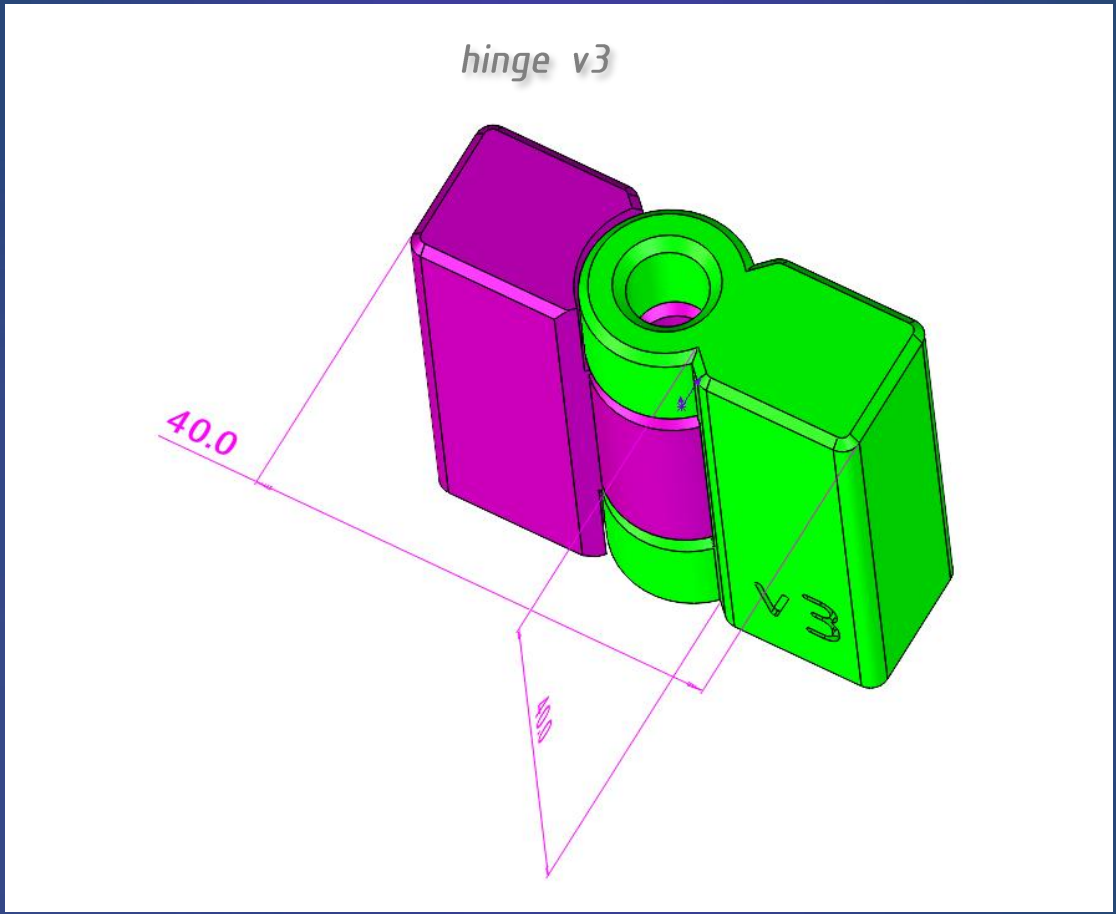

Clarifying: the version chosen as version 3, uses all of the same equations to describe the design except the exterior of the hinge circle is set to match the thickness of the rectangular body (flush lines appear looking from top view)

Hinge v2

- hinge v3: for mounting a panel flush to another panel. Carry 10kg using one pair of hinges and turn at least 90 degrees

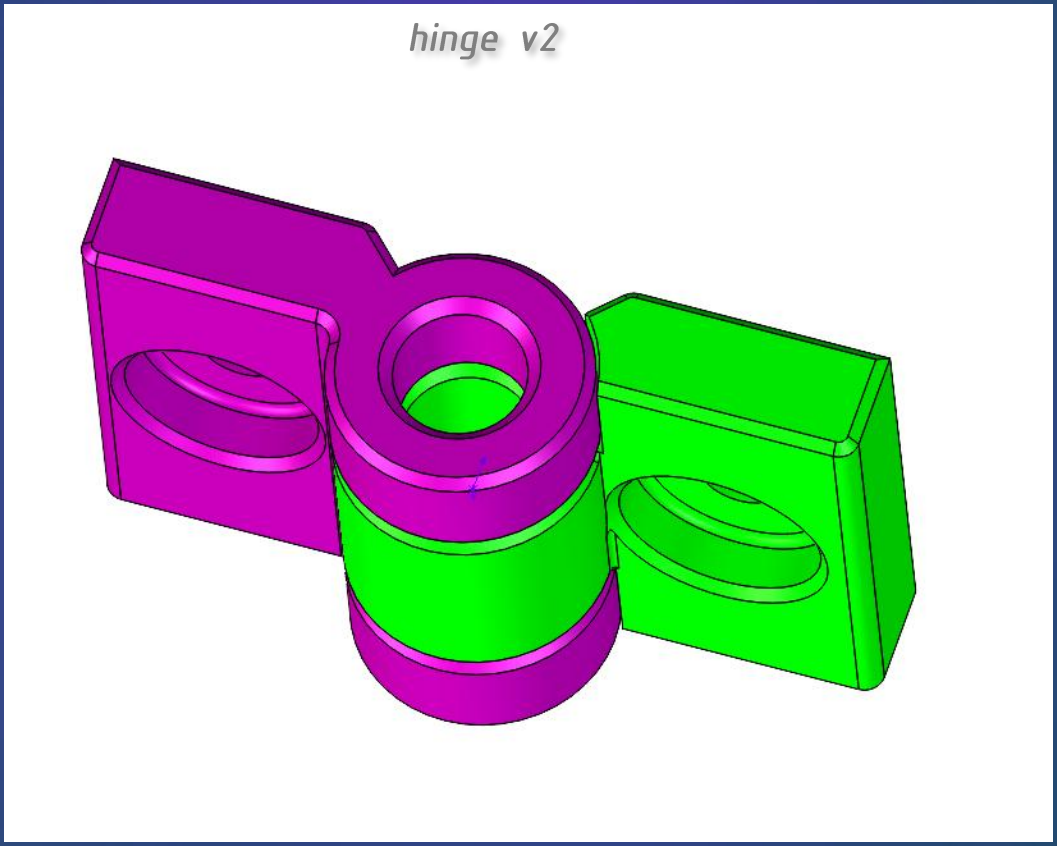

Hinge DBL

- hingeDBL for adding articulation to a light load (1kg) or so

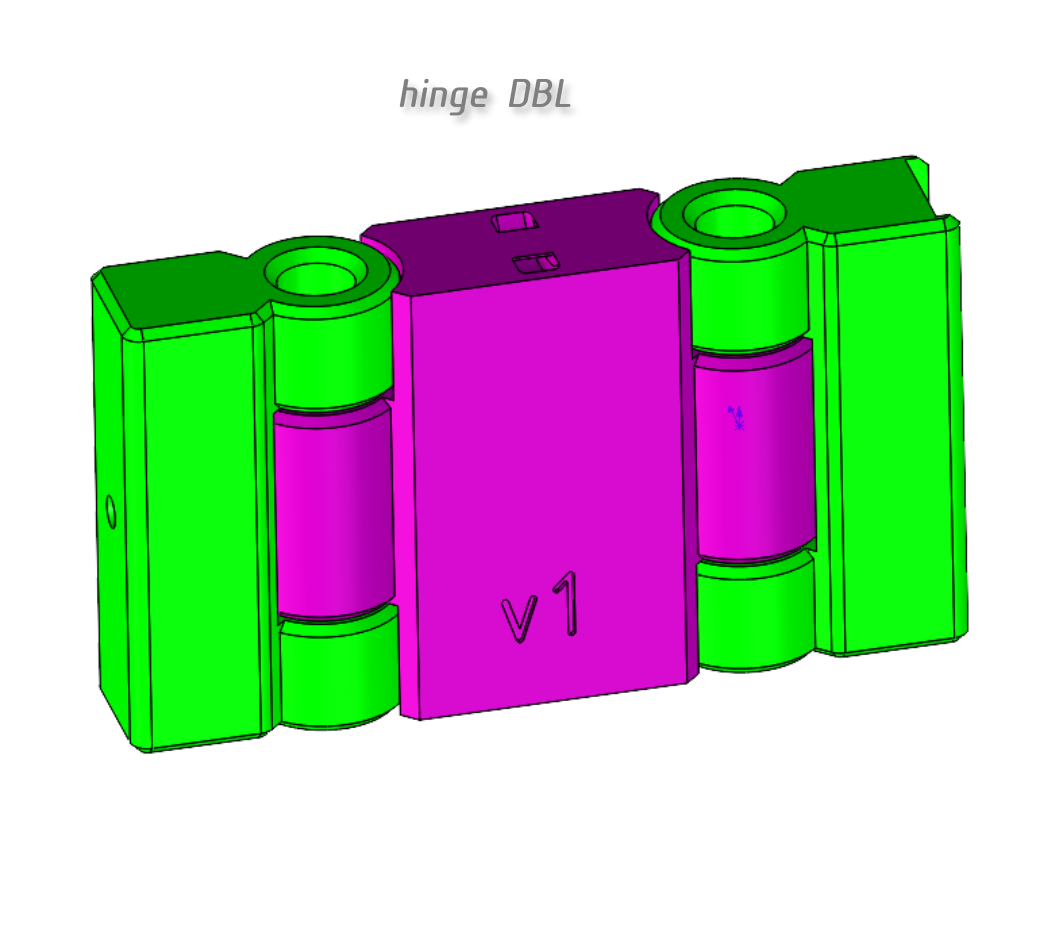

Parameters (summary)

- see notes in equations for variables as needed

Equations, Global Variables, and Dimensions

Filter All Fields

Name	Value / Equation	Evaluates to	Comments
Global Variables			
"pin_diam"	= 6.6	6.600000	LDPE tube - snug fit
"width_hinge"	= 40	40.000000	length of pivoting axis (length of hinge pin)
"OD_hinge"	= 14	14.000000	diameter of round body exterior
"centers"	= 20	20.000000	from pin center to body extremity
"gap_1"	= 0.3	0.300000	gap between bodies (horizontal & vertical)
"midsection"	= 17	17.000000	length of midsection body around pin (height)
"chamf_pin"	= 1	1.000000	
"chamf_base"	= 0.8	0.800000	
Add global variable			
Features			
Add feature suppression			
Dimensions			
D1@sk_cylinder	= "pin_diam"	6.6mm	
D2@sk_cylinder	= "OD_hinge"	14mm	
D3@sk_cylinder	= "width_hinge"	40mm	
D1@cylinder1	360deg	360deg	

OK
Cancel
Import...
Export...
Help

Automatically rebuild
Angular equation units: Degrees
Automatic solve order
Link to external file:

1 Diameters

- pin diameters are 6.6mm or 10.0 mm (tested fitment)
- width_hinge is the exterior diameter for hinge region

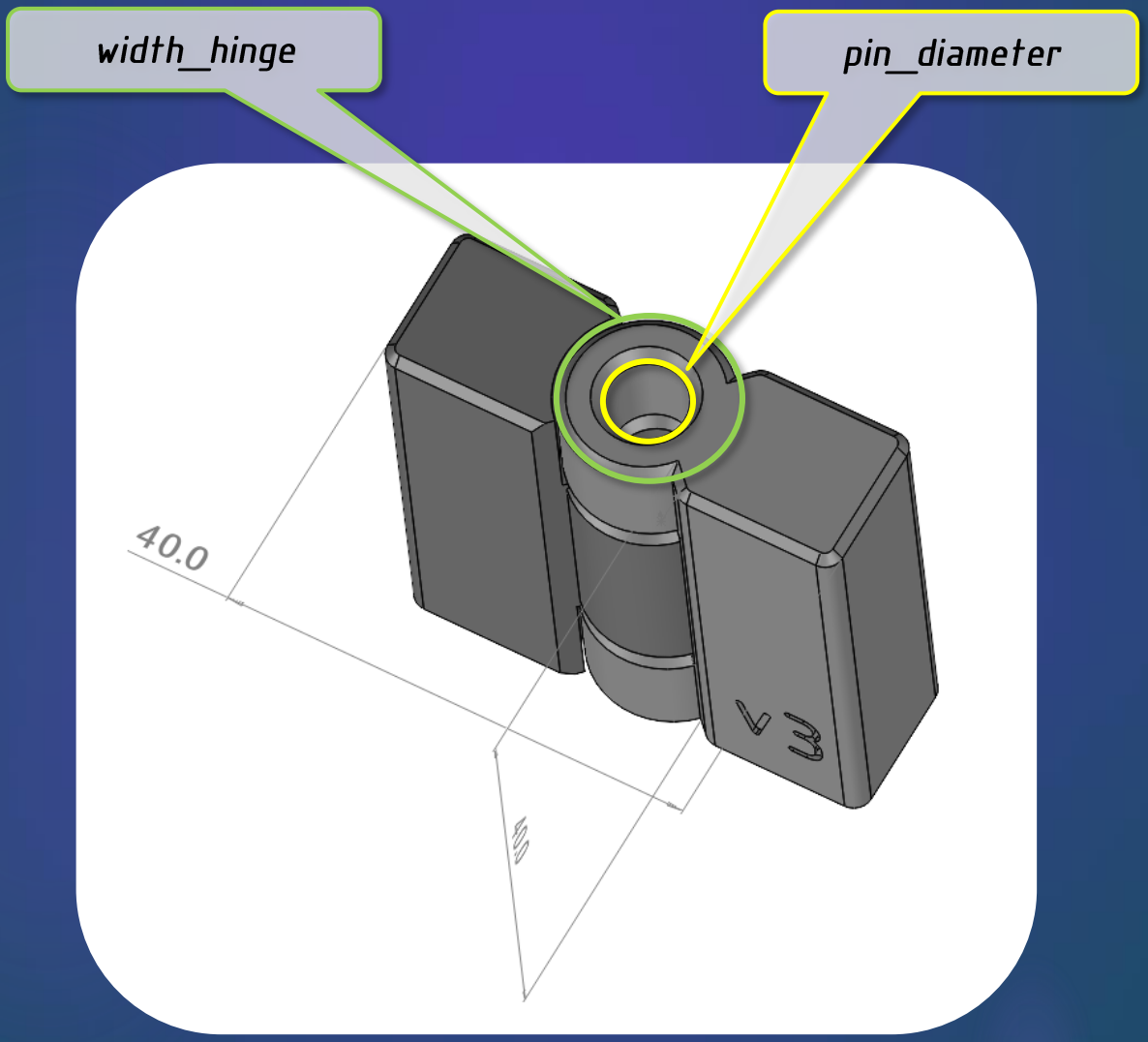

2 Gaps

- gap describes gaps between bodies

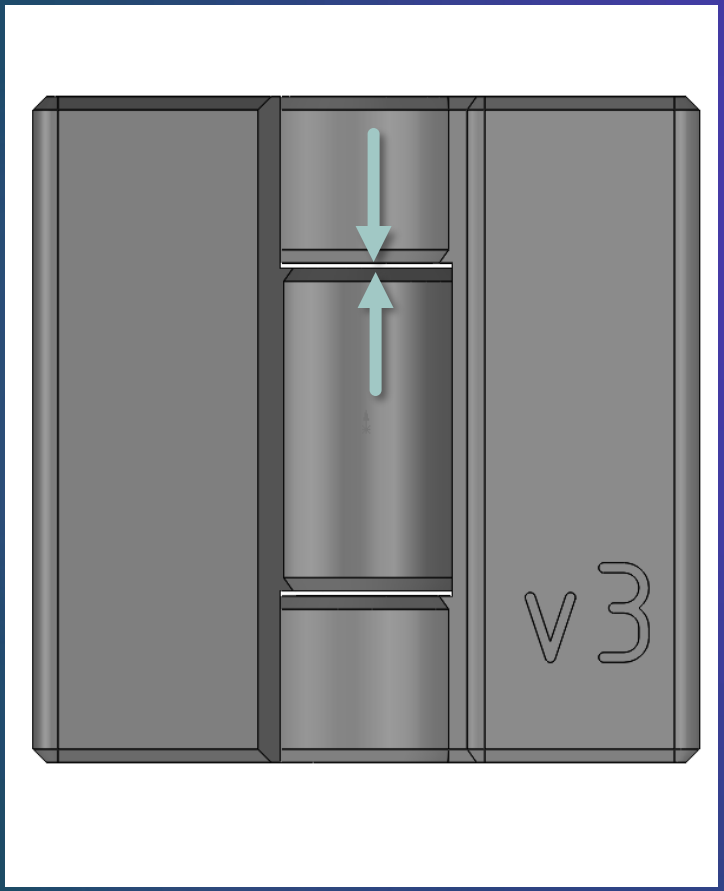

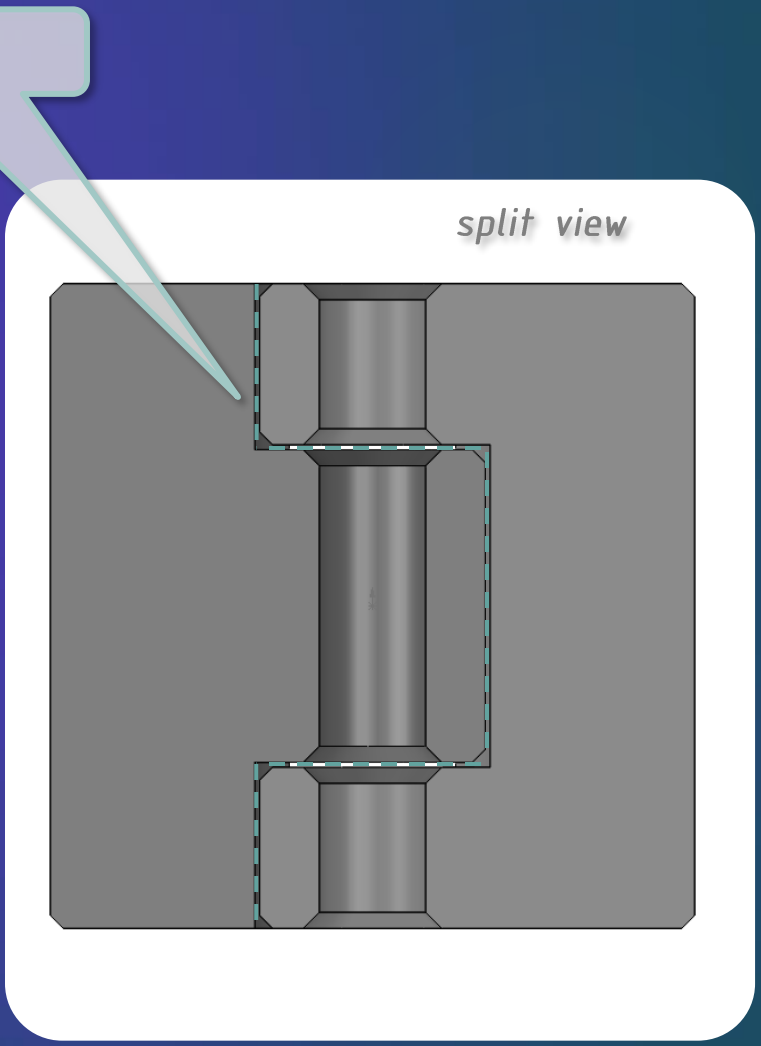

3 Grips

▶ grip length – the dimension of the arm along which the arm contacts the hinge pin

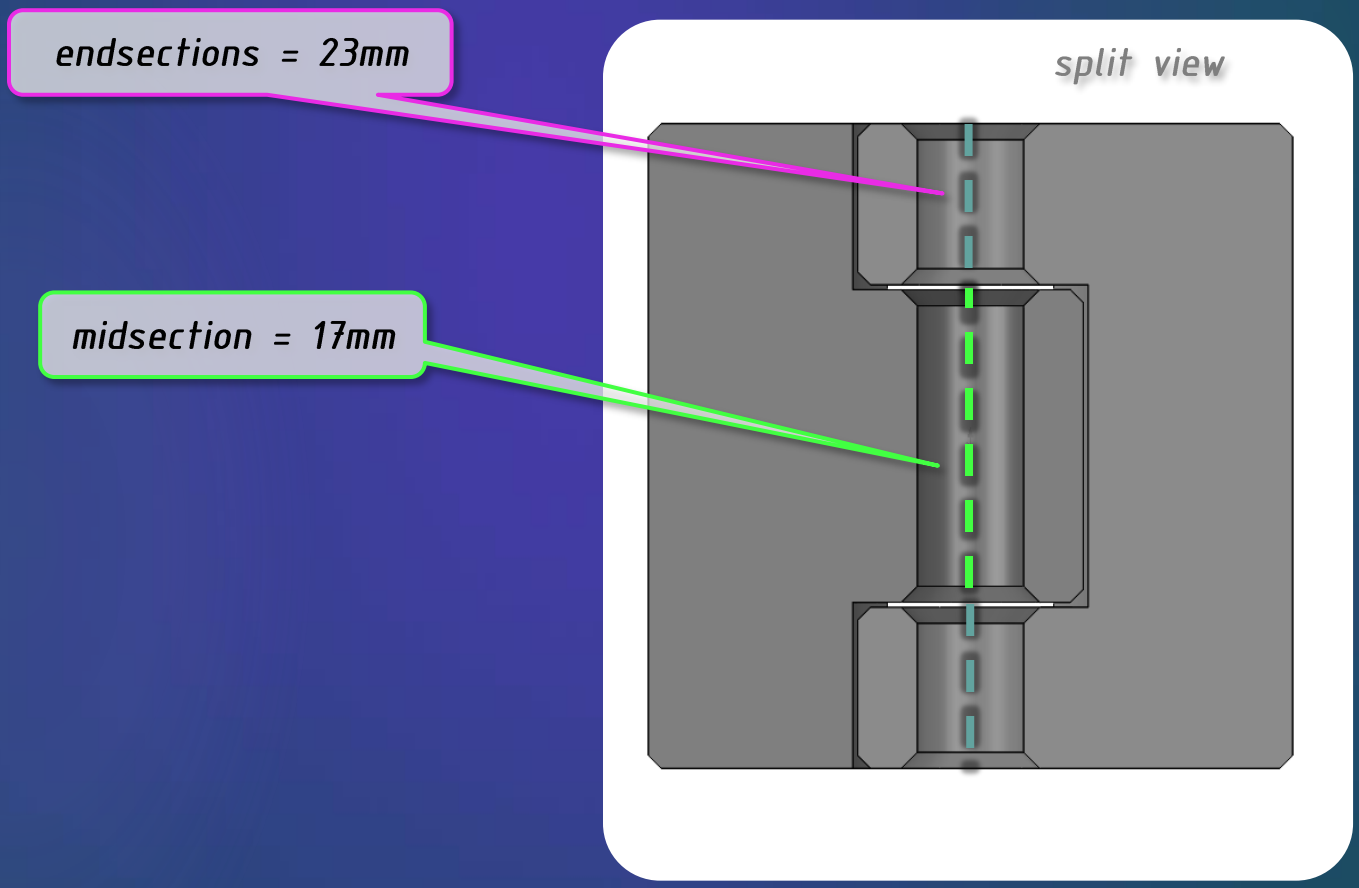

3.1 Grips

- hinge strength aims for equal distribution
- grip height is divided 50%

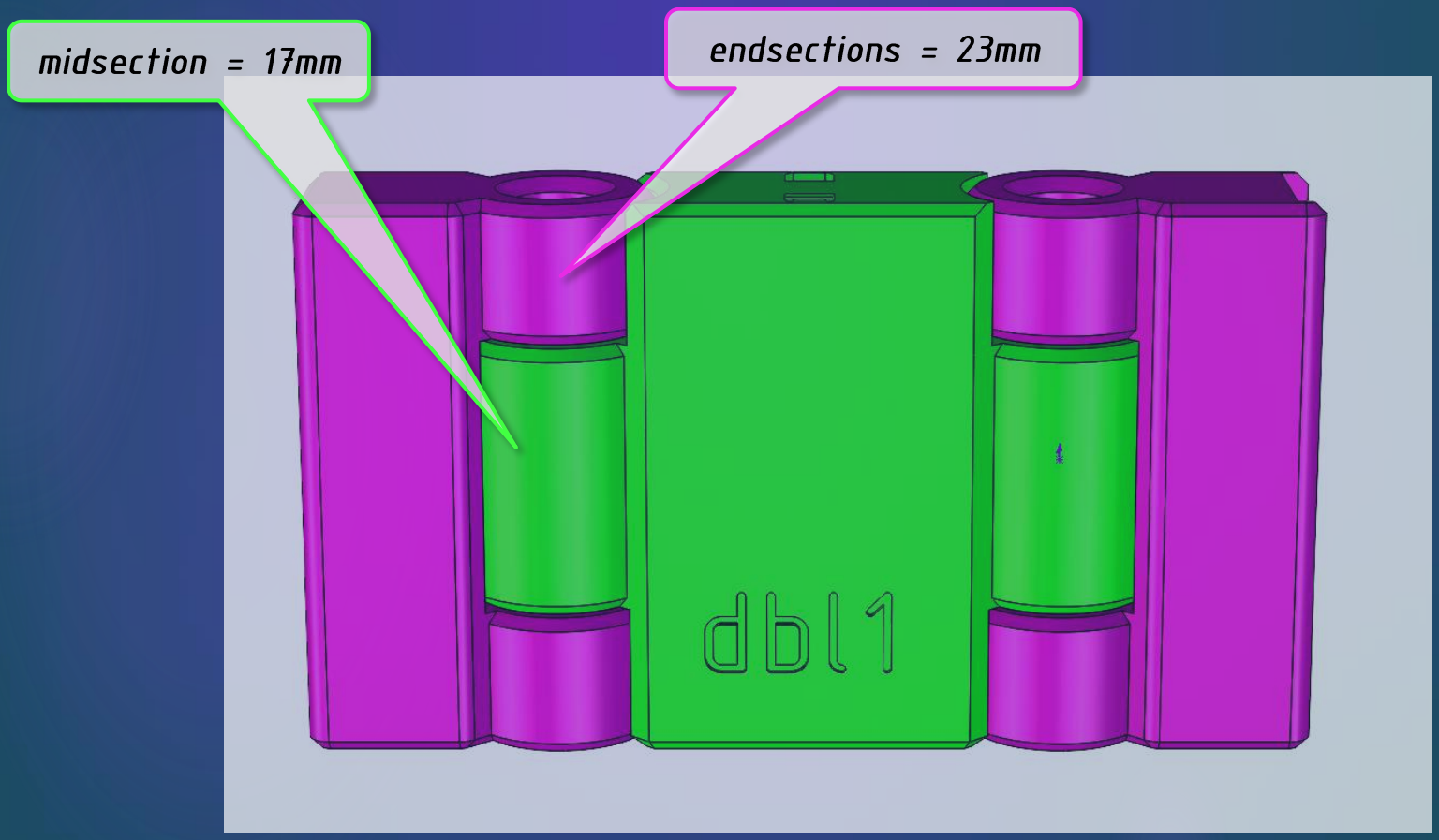

Parameters 2.2

- pin_diameter refers to the mating pin (not shown)
- hole diameter will be nominal pin diameter + adjustments

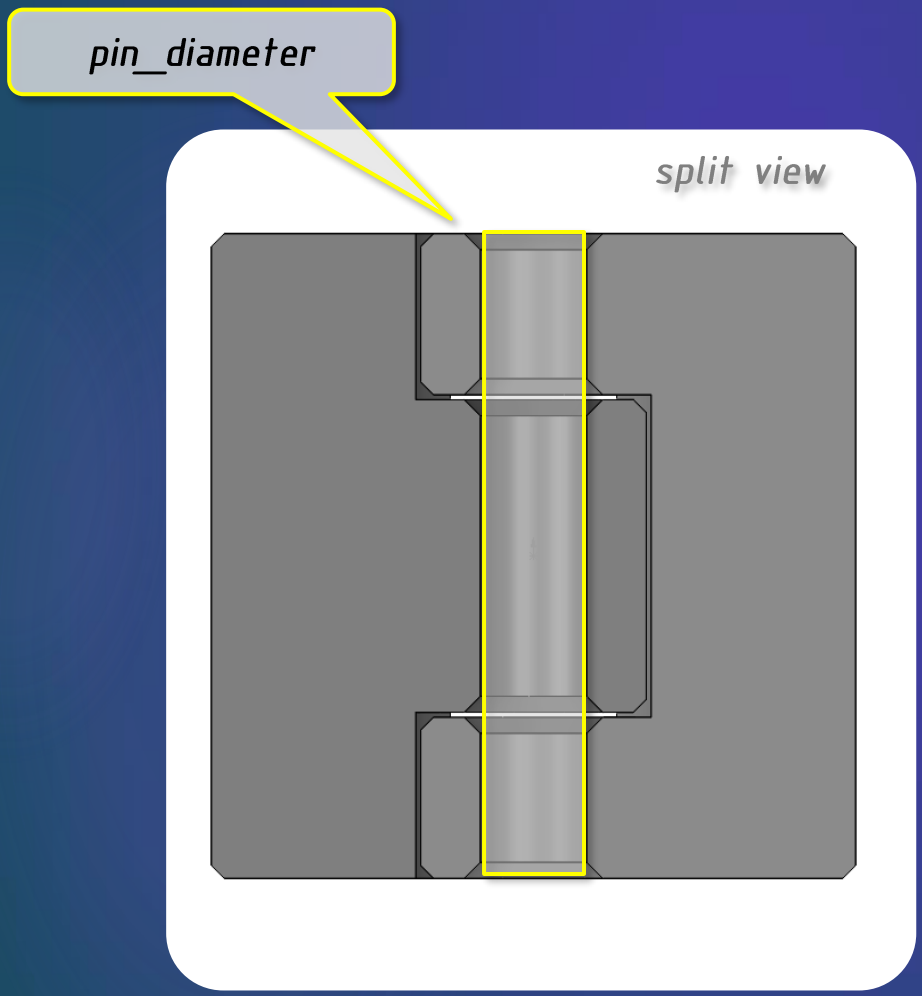

Adjustment is driven by tolerance stackup:

A) plastic is overbuilt, standard is 0.3mm per dimension
B) clearance is desired: standard is 0.3mm to make contact
C) interference for friction is desired, 0.3mm for friction.
D) compressibility of pin is accounted for, assumed 0.3mm

A) applied to all parts, all regions
B) applied to mating regions with free movement
C) applied to this design for friction
D) applied to this assembly for compressibility

Parameters3

- chamf_pin and chamf_base control size of chamfers.
- chamf_base also sets the "base" solids contacting the 3D printer plate

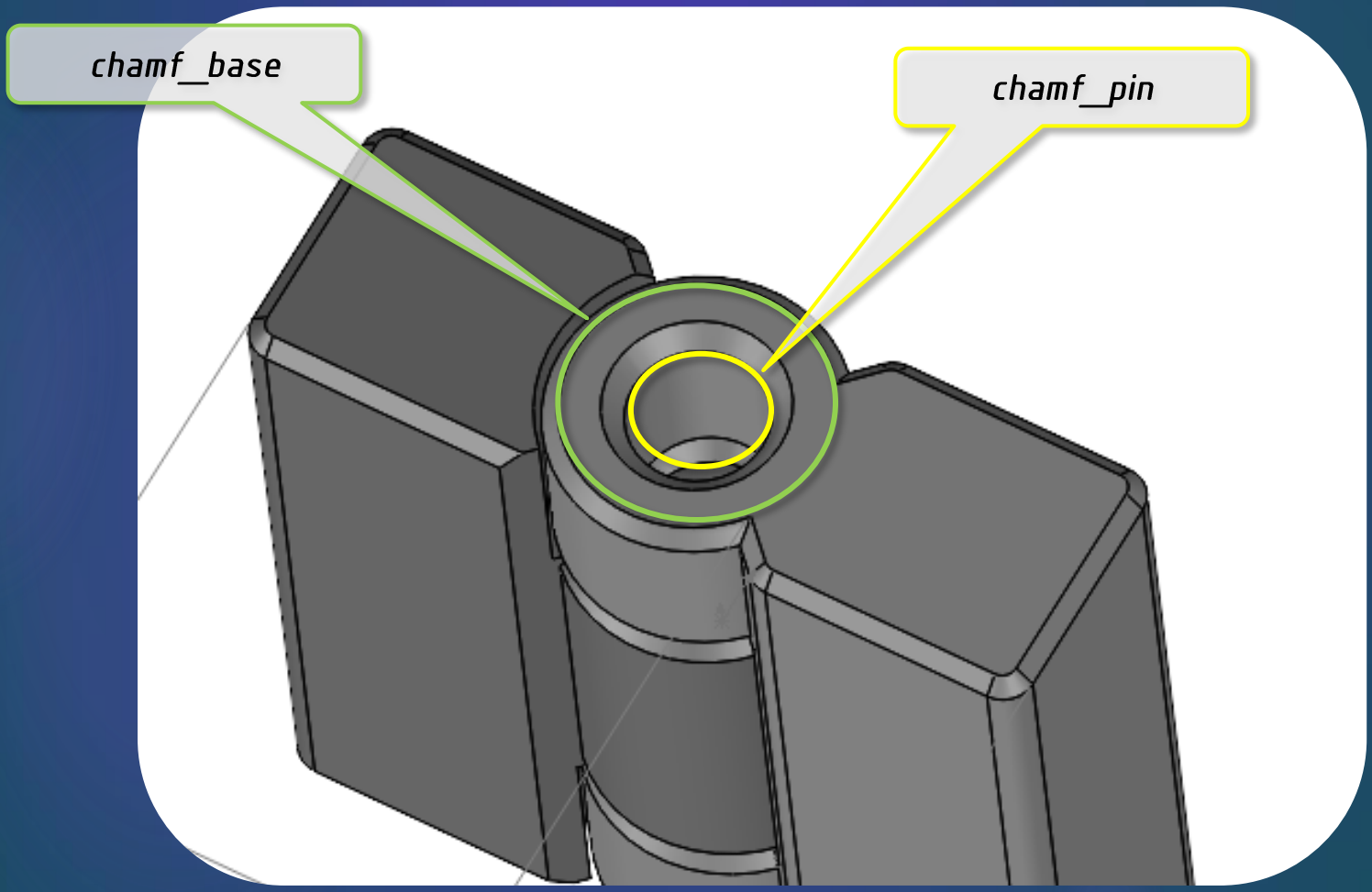

Standards

- chamfers always applied to base, usually 0.6mm or 0.8mm
- top/bottom symmetry is default unless asymmetry is required
- parts printed in near-contact with 0.3mm gap
    - gap is equal to one printing layer height
- gaps in vertical space are 0.3mm, equal to our standard tolerance
    - therefore, jt is assumed the parts may contact each other

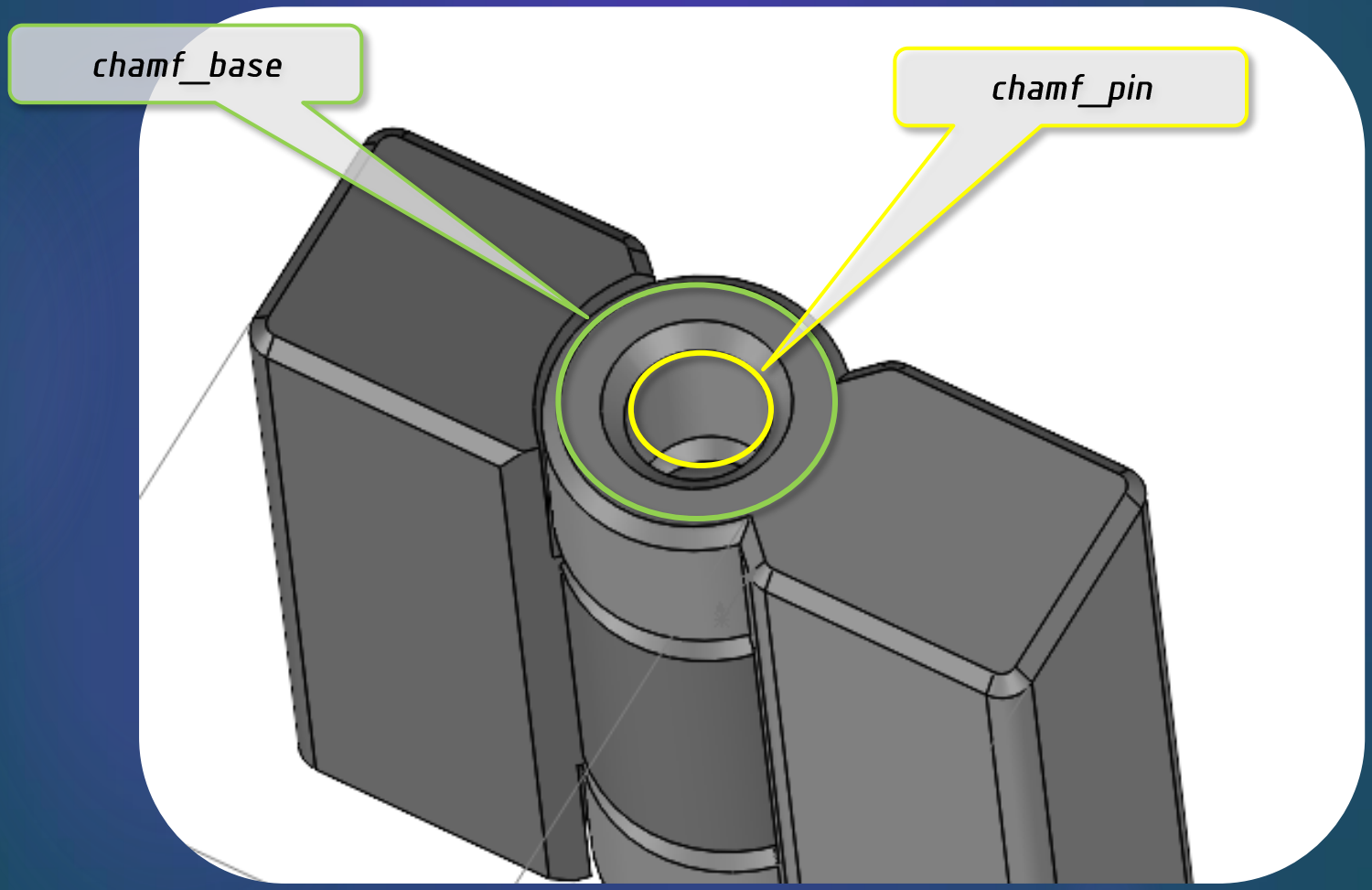

Labeling

- deboss with 0.5mm
  - (between 1 and 2 path widths of printer)
- text height = 6mm for legible result
- text orientation matches pring direction

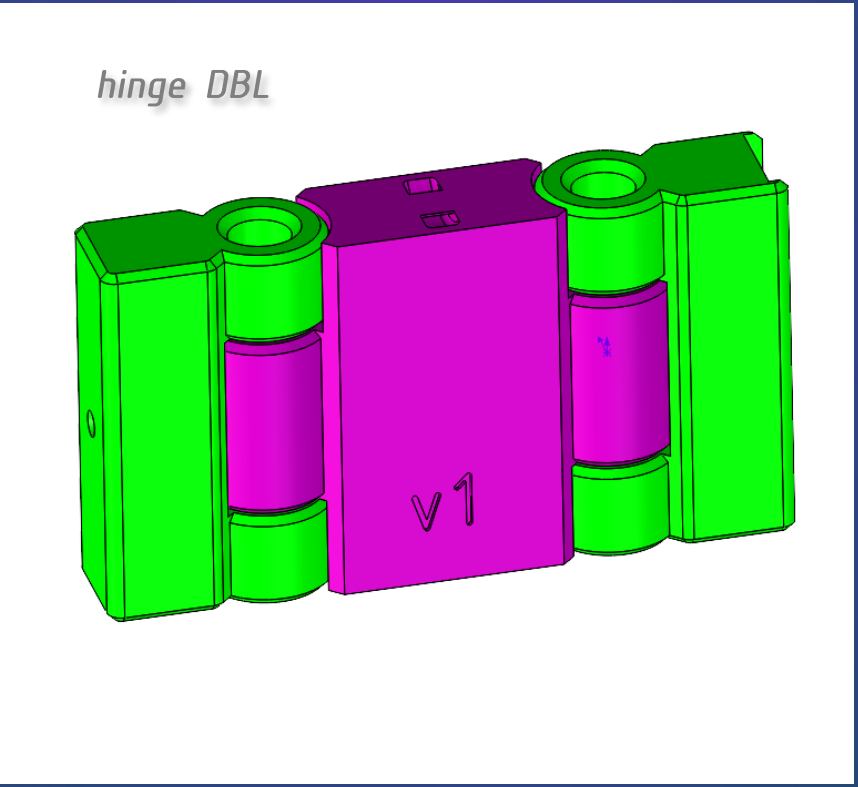

Properties

- keywords allow finding parts in windows explorer. keywords are promoted as highly as filename in windows search.
- comments become necessary if part is parametric, has revison numbers, or has nonobvious design intentions

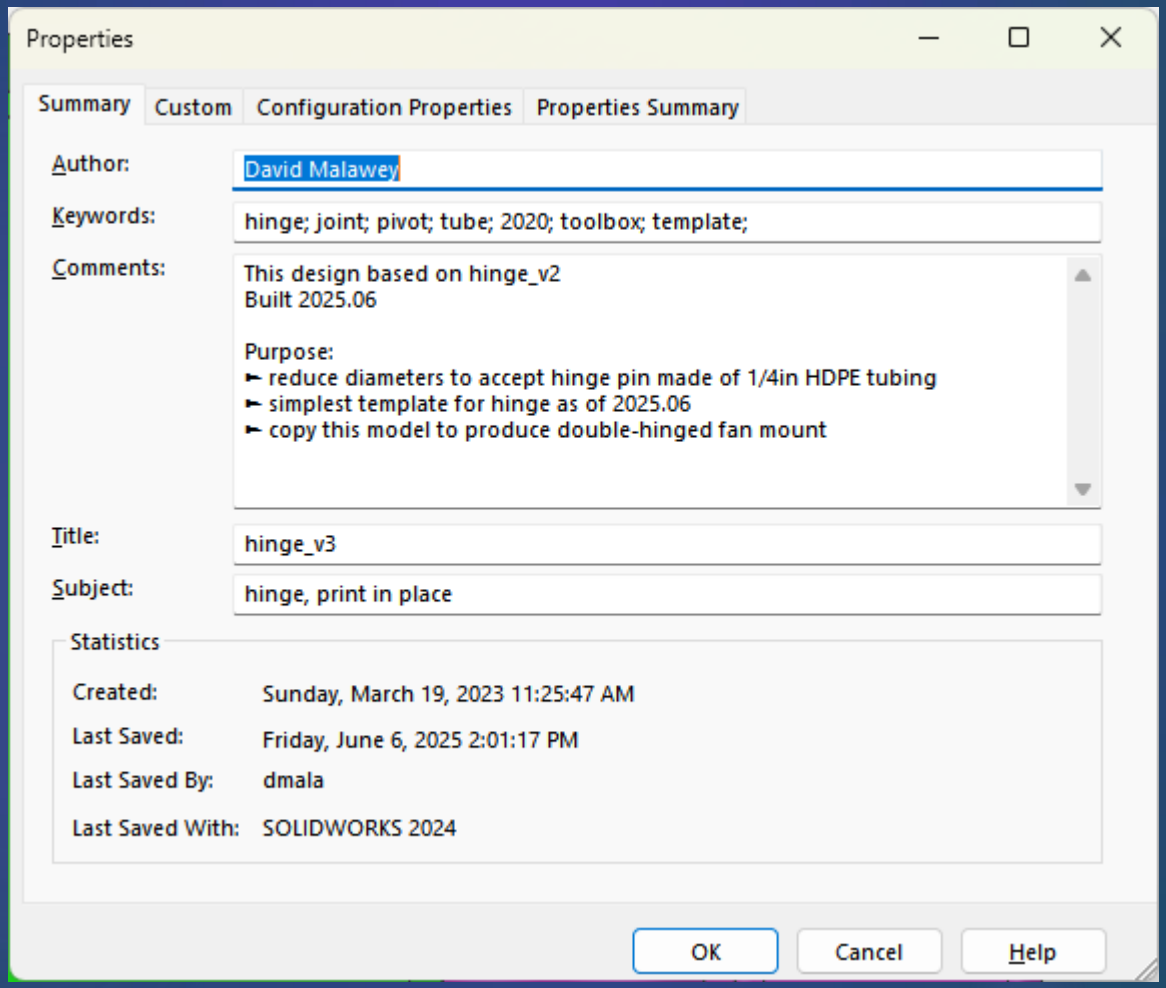

Coordinate System

- Solidworks includes a coordinate system in every part, and we add one additional coordinate system named "PRINT"
- If during the design, it is decided the best print direction will not be the "z" axis of the main coordinate system, then the "print" coordinates are adjusted to give a Z-direction which aligns to the vertically-UP direction of the part during printing.

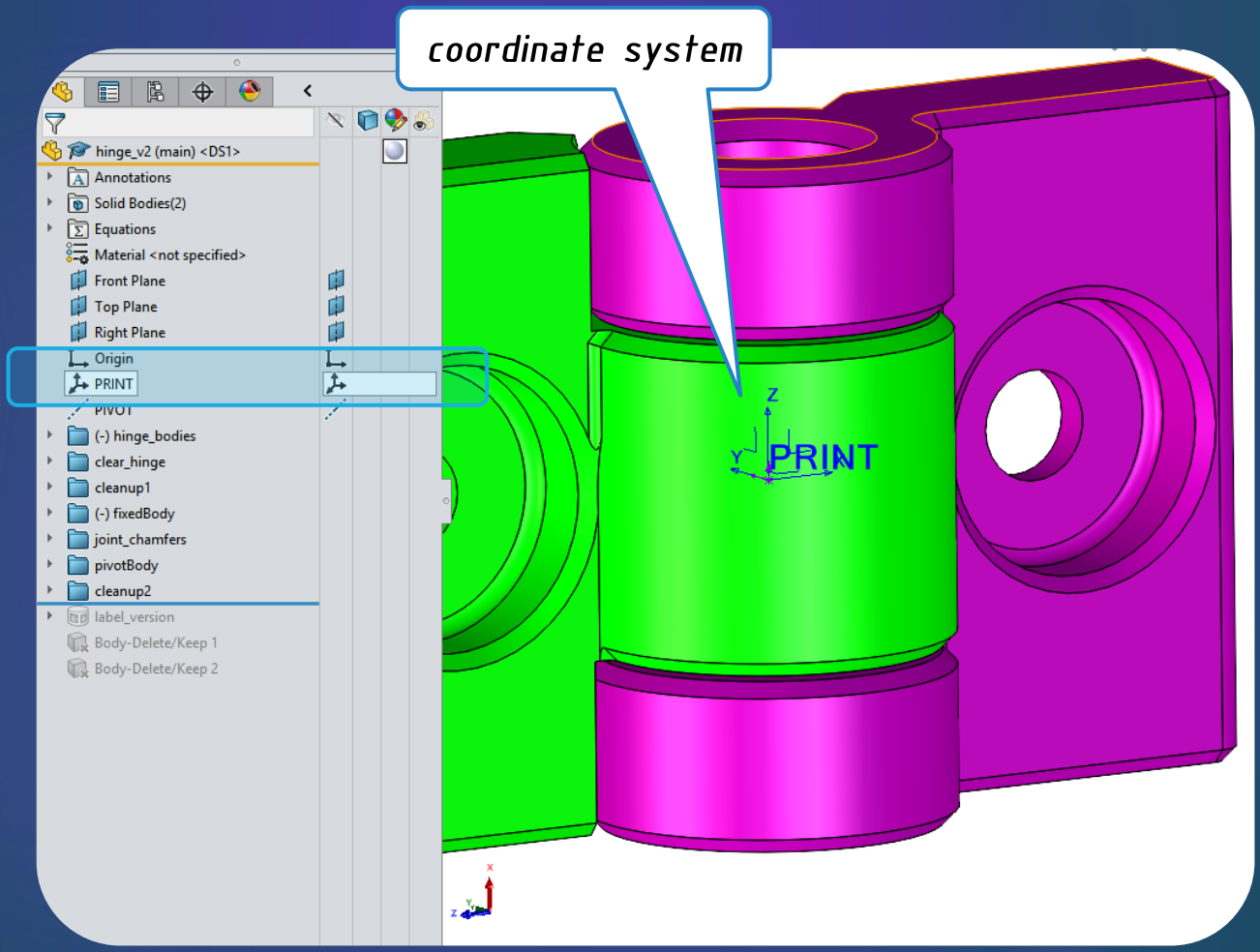

Exporting STL

- select the "PRINT" coordinate system when we export the STL file.
- by default, the slicer software will import the part in the proper orientation.
- When exporting to STEP, the online viewers will orient the parts properly on-screen

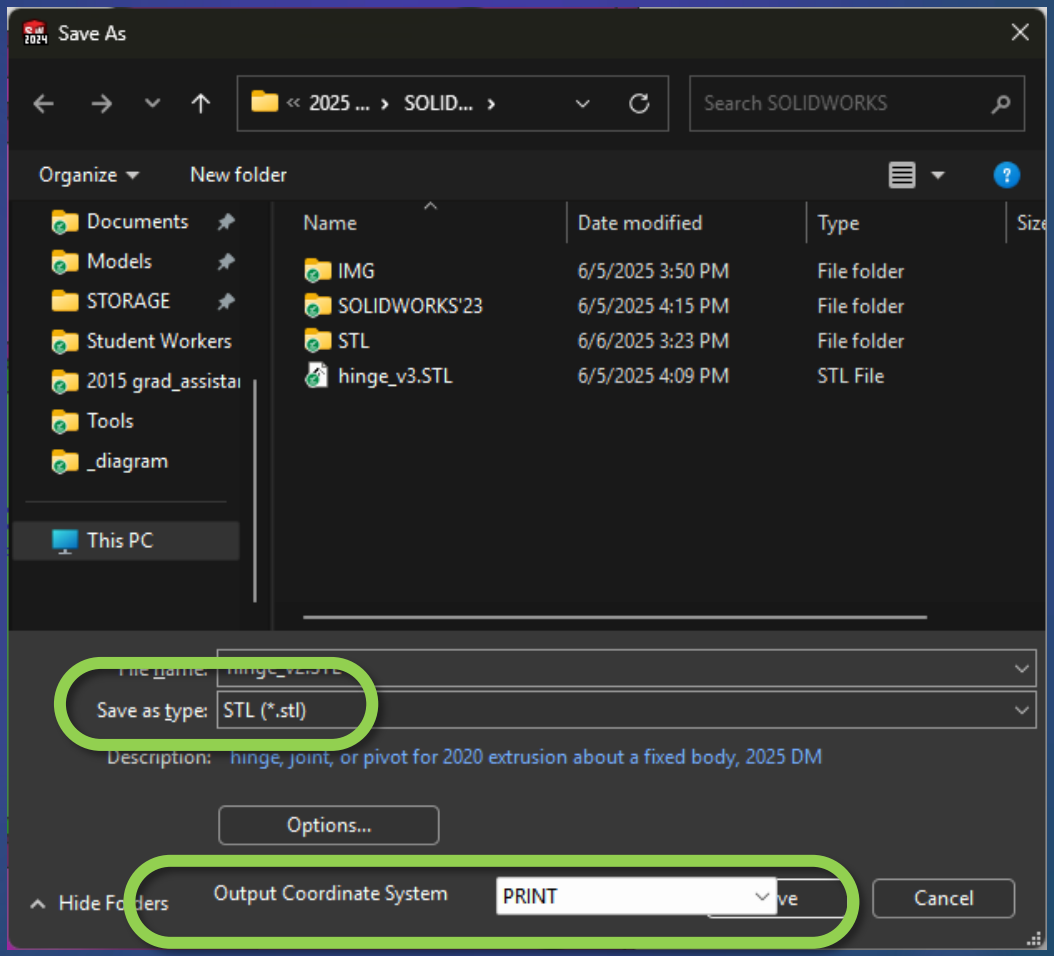

Errors

As of 2025.09 you may find improvements in the parametric formulation of the hinge model in "HingeEnd.sldprt"

- Each published design (on grabCAD) meets a minimal set of criteria for open publication
  - physical printing validation done
  - model fully defined
    - names applied to feature tree
- However, errors surface over time.
  - the standards do improve over time
  - our "best example" models become slightly outdated.
  - this tutorial made in 2025.06 prefers hinge v3, but a new hinge_2020 has made some improvements to the core geometry
  - it is important to note the dates of publications, cad models, and images
- many designs have explanations on YouTube – note the discussions on youtube follow the standards at that given time.

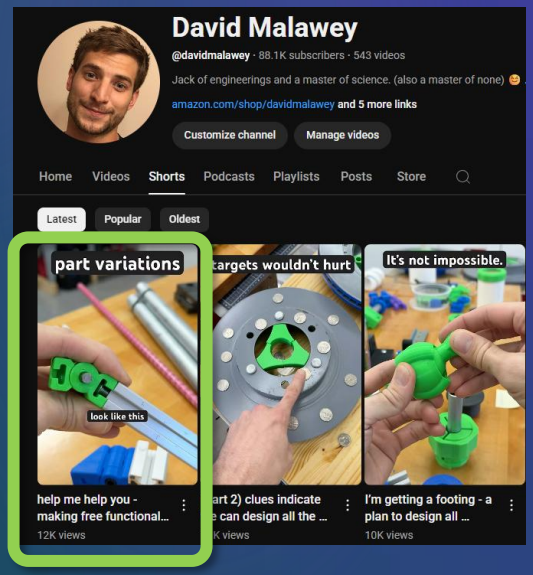

Short Video titled: help me help you – making free functional parts Youtube Shorts Video Link 2025.09