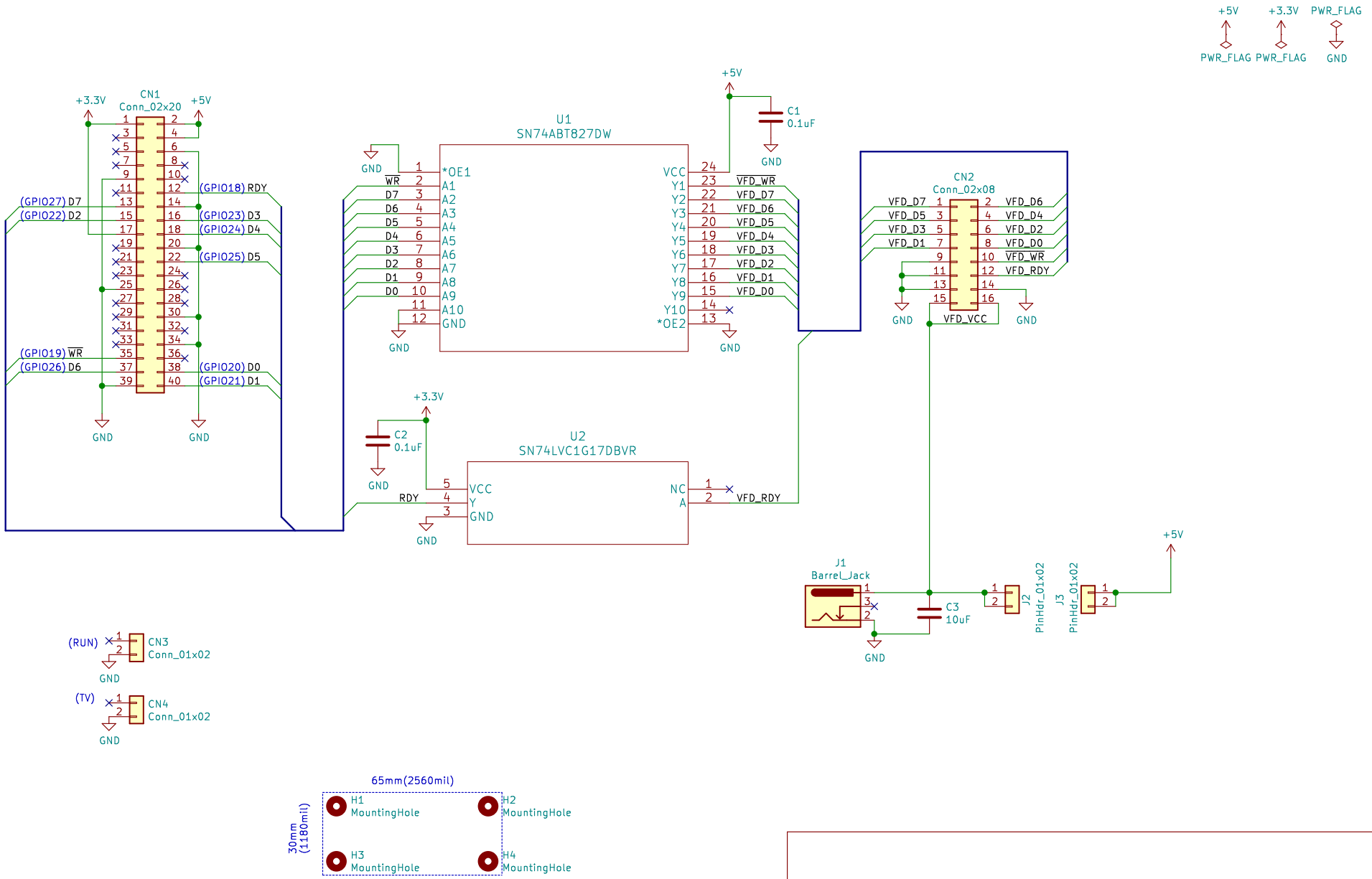

Parallel interface for Raspberry pi and Noritake GU-3000 Series VFD Module

Mukai Lab.

Sheet: /

File: GU3000RasPiIF.sch

Title: GU3000RasPiIF

Size: A4	Date: 2021-02-01	**Rev: 1.2**
KiCad E.D.A. kicad (5.1.5)-3		Id: 1/1