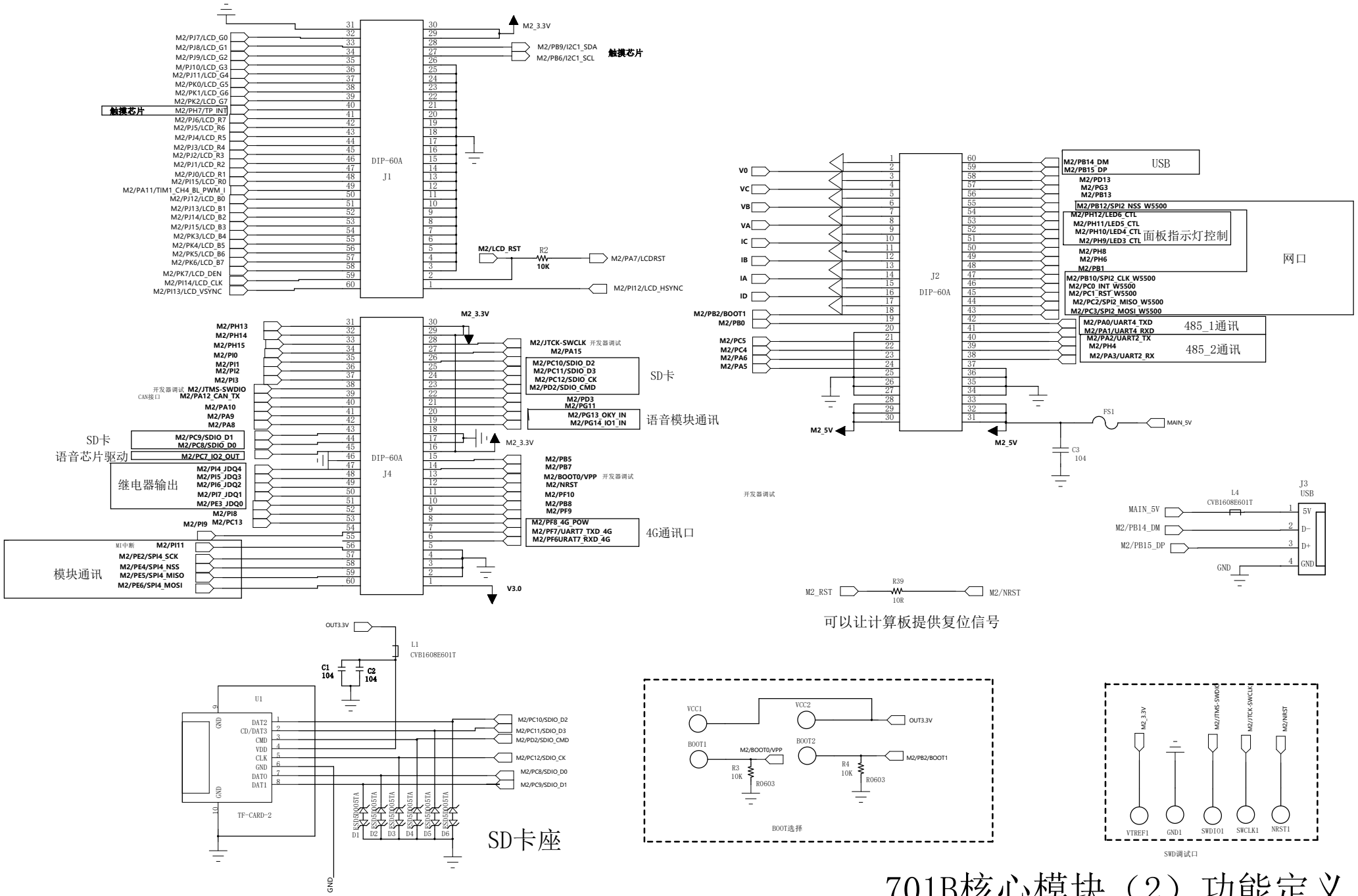

701B核心模块（2）功能定义

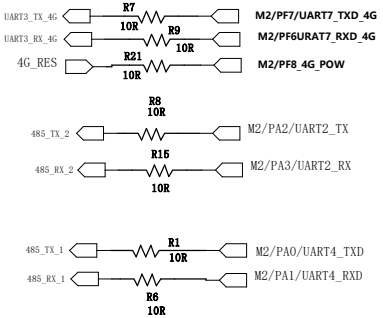
UART3_TX_4G
R7
10R
M2/PF7/UART7_TXD_4G
UART3_RX_4G
R9
10R
M2/PF6URAT7_RXD_4G
4G_RES
R21
10R
M2/PF8_4G_POW
R8
10R
485_TX_2
M2/PA2/UART2_TX
R15
485_RX_2
10R
M2/PA3/UART2_RX
485_TX_1
R1
10R
M2/PA0/UART4_TXD
485_RX_1
M2/PA1/UART4_RXD
R6
10R

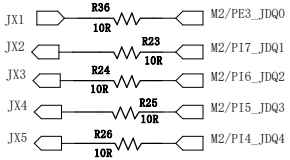
JX1
R36
10R
M2/PE3_JDQ0
JX2
R23
10R
M2/PI7_JDQ1
JX3
R24
10R
M2/PI6_JDQ2
JX4
R25
10R
M2/PI5_JDQ3
JX5
R26
10R
M2/PI4_JDQ4

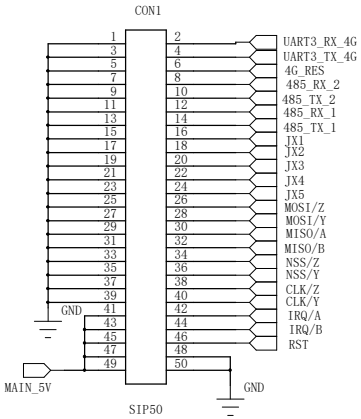
CON1
UART3_RX_4G
UART3_TX_4G
4G_RES
485_RX_2
485_TX_2
485_RX_1
485_TX_1
JX1
JX2
JX3
JX4
JX5
MOSI/Z
MOSI/Y
MISO/A
MISO/B
NSS/Z
NSS/Y
CLK/Z
CLK/Y
IRQ/A
IRQ/B
RST
GND
MAIN_5V
SIP50

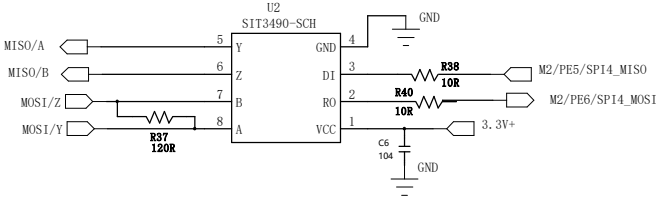
U2
SIT3490-SCH
MISO/A
MISO/B
MOSI/Z
MOSI/Y
R37
120R
Y
Z
B
A
GND
DI
RO
VCC
R38
10R
M2/PE5/SPI4_MISO
R40
10R
M2/PE6/SPI4_MOSI
3.3V+
C6
104
GND

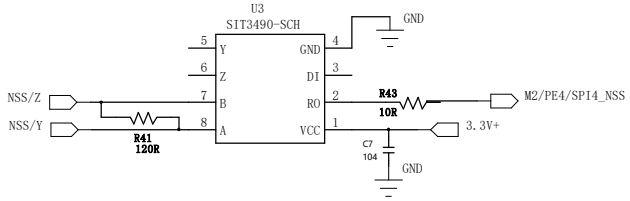
U3
SIT3490-SCH
NSS/Z
NSS/Y
R41
120R
Y
Z
B
A
GND
DI
RO
VCC
R43
10R
M2/PE4/SPI4_NSS
3.3V+
C7
104
GND

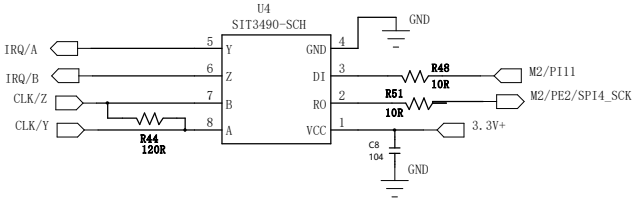
U4
SIT3490-SCH
IRQ/A
IRQ/B
CLK/Z
CLK/Y
R44
120R
Y
Z
B
A
GND
DI
RO
VCC
R48
10R
M2/PI11
R51
10R
M2/PE2/SPI4_SCK
3.3V+
C8
104
GND

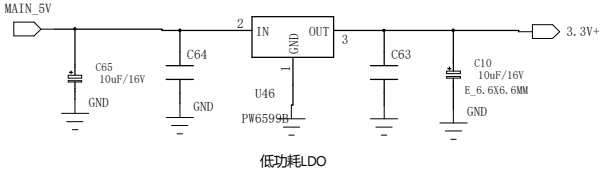
MAIN_5V
C65
10uF/16V
GND
C64
IN
OUT
GND
U46
PW6599B
C63
C10
10uF/16V
E_6.6X6.6MM
3.3V+
低功耗LDO

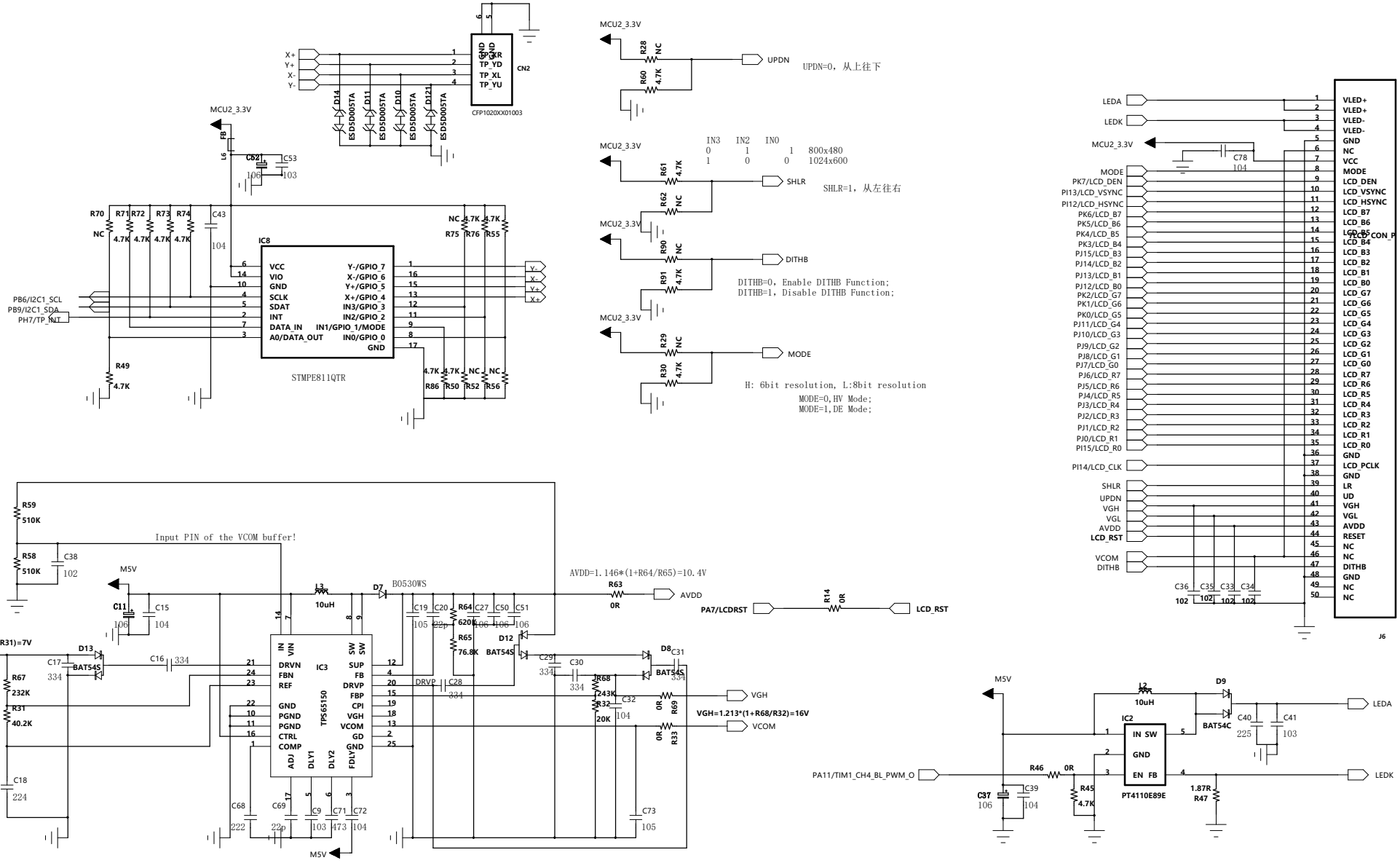
CN2
CFP1020XX01003
TP_XR
TP_YD
TP_XL
TP_YU
X+
Y+
X-
Y-
ESD5D005TA
MCU2_3.3V
IC8
STMPE811QTR
VCC
VIO
GND
SCLK
SDAT
INT
DATA_IN
A0/DATA_OUT
Y-/GPIO_7
X-/GPIO_6
Y+/GPIO_5
X+/GPIO_4
IN3/GPIO_3
IN2/GPIO_2
IN1/GPIO_1/MODE
IN0/GPIO_0
PB6/I2C1_SCL
PB9/I2C1_SDA
PH7/TP_INT
UPDN
UPDN=0, 从上往下
IN3 IN2 IN0
0 1 1 800x480
1 0 0 1024x600
SHLR
SHLR=1, 从左往右
DITHB
DITHB=0, Enable DITHB Function;
DITHB=1, Disable DITHB Function;
MODE
H: 6bit resolution, L:8bit resolution
MODE=0,HV Mode;
MODE=1,DE Mode;
LCD_CON_P
J6
LEDA
LEDK
VLED+
VLED-
GND
NC
VCC
MODE
LCD_DEN
LCD_VSYNC
LCD_HSYNC
LCD_B7
LCD_B6
LCD_B5
LCD_B4
LCD_B3
LCD_B2
LCD_B1
LCD_B0
LCD_G7
LCD_G6
LCD_G5
LCD_G4
LCD_G3
LCD_G2
LCD_G1
LCD_G0
LCD_R7
LCD_R6
LCD_R5
LCD_R4
LCD_R3
LCD_R2
LCD_R1
LCD_R0
LCD_PCLK
LR
UD
VGH
VGL
AVDD
RESET
DITHB
LCD_RST
VCOM
PA7/LCDRST
AVDD=1.146*(1+R64/R65)=10.4V
Input PIN of the VCOM buffer!
VGL=1.213*(1+R67/R31)=7V
VGH=1.213*(1+R68/R32)=16V
IC3
TPS65150
DRVN
FBN
REF
GND
PGND
CTRL
COMP
IN
SUP
FB
DRVP
FBP
CPI
VGH
VCOM
GD
ADJ
DLY1
DLY2
PA11/TIM1_CH4_BL_PWM_O
IC2
PT4110E89E
IN SW
GND
EN FB
M5V

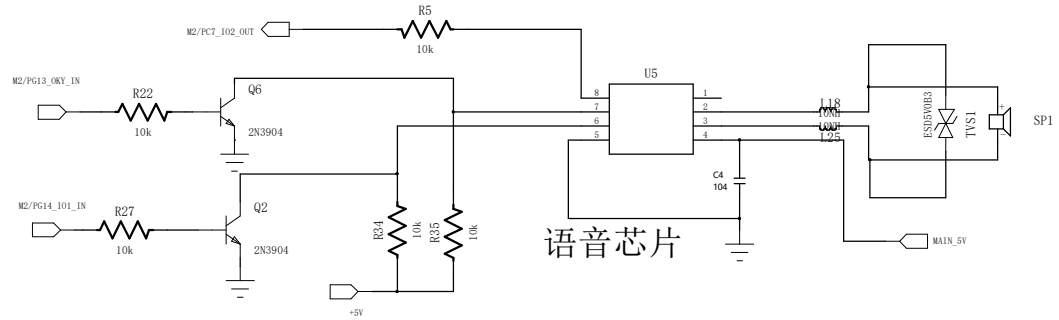
M2/PC7_IO2_OUT
R5
10k
M2/PG13_OKY_IN
R22
10k
Q6
2N3904
M2/PG14_IO1_IN
R27
10k
Q2
2N3904
R34
10k
R35
10k
+5V
U5
8
7
6
5
1
2
3
4
L18
L24
L25
C4
104
ESD5V0B3
TVS1
SP1
MAIN_5V
语音芯片

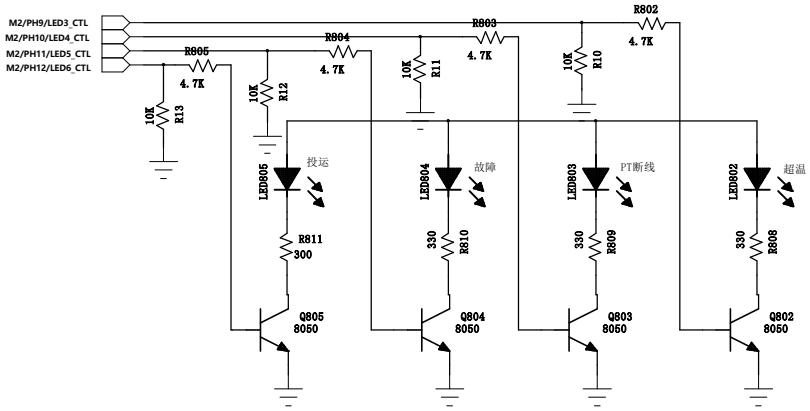
M2/PH9/LED3_CTL
M2/PH10/LED4_CTL
M2/PH11/LED5_CTL
M2/PH12/LED6_CTL
R805
4.7K
R804
4.7K
R803
4.7K
R802
4.7K
10K
R13
10K
R12
10K
R11
10K
R10
LED805
投运
LED804
故障
LED803
PT断线
LED802
超温
R811
300
330
R810
330
R809
330
R808
Q805
8050
Q804
8050
Q803
8050
Q802
8050

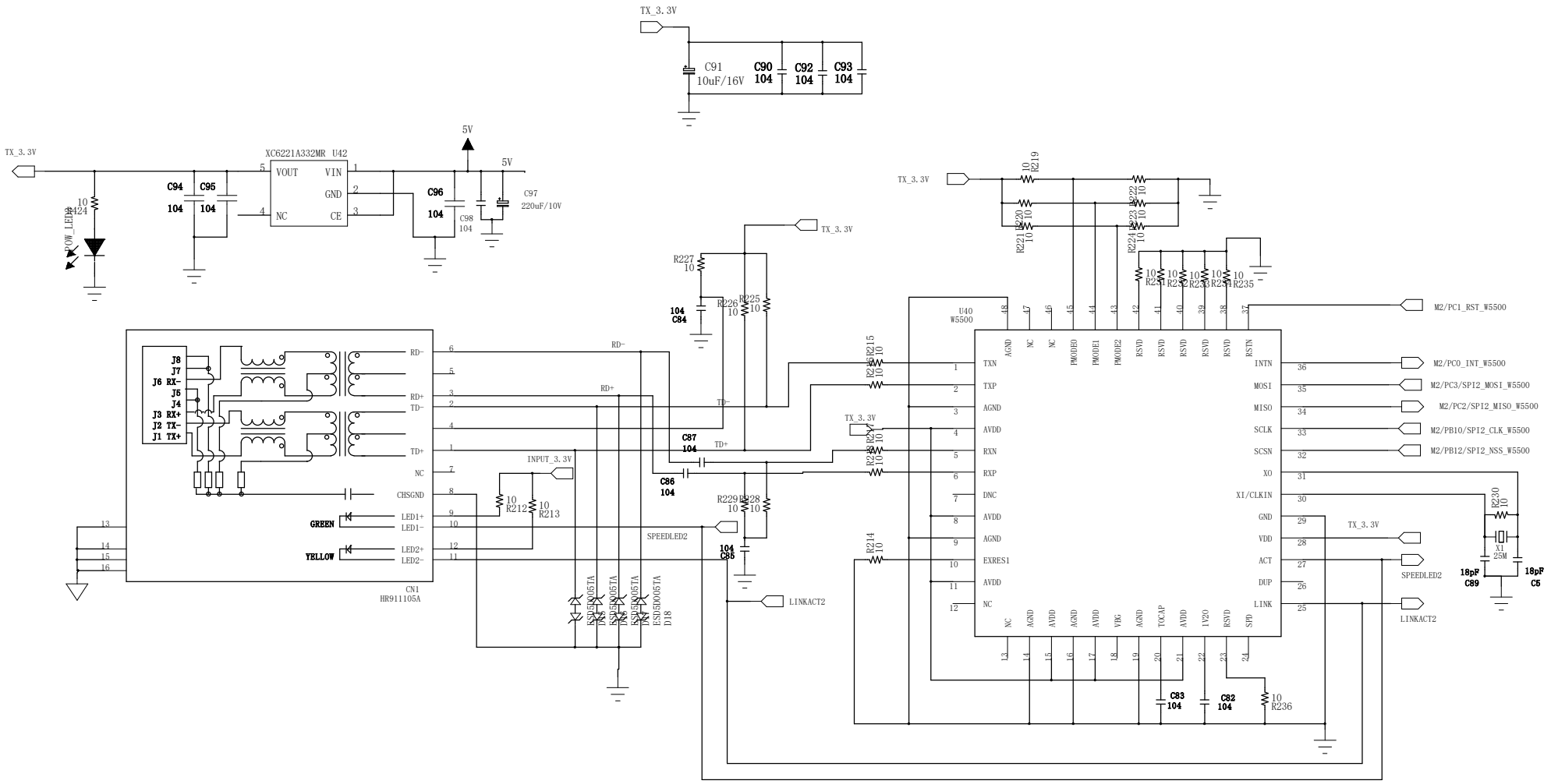
TX_3.3V
C91
10uF/16V
C90
104
C92
104
C93
104
5V
XC6221A332MR U42
VOUT
VIN
GND
NC
CE
C94
104
C95
104
C96
104
C98
104
C97
220uF/10V
R424
10
POW_LED2
J8
J7
J6 RX-
J5
J4
J3 RX+
J2 TX-
J1 TX+
RD-
RD+
TD-
TD+
NC
CHSGND
LED1+
LED1-
LED2+
LED2-
GREEN
YELLOW
CN1
HR911105A
INPUT_3.3V
R212
10
R213
10
ESD5005TA
D18
R227
10
R226
10
R225
10
104
C84
C87
104
C86
104
R229
10
R228
10
104
C85
SPEEDLED2
LINKACT2
R215
10
R216
10
R217
10
R218
10
R214
10
U40
W5500
AGND
NC
PMODE0
PMODE1
PMODE2
RSVD
RSTN
TXN
TXP
AVDD
RXN
RXP
DNC
EXRES1
INTN
MOSI
MISO
SCLK
SCSN
XO
XI/CLKIN
GND
VDD
ACT
DUP
LINK
SPD
VBG
TOCAP
1V20
M2/PC1_RST_W5500
M2/PC0_INT_W5500
M2/PC3/SPI2_MOSI_W5500
M2/PC2/SPI2_MISO_W5500
M2/PB10/SPI2_CLK_W5500
M2/PB12/SPI2_NSS_W5500
R230
10
X1
25M
18pF
C89
18pF
C5
C83
104
C82
104
R236
10
R219
10
R220
10
R221
10
R222
10
R223
10
R224
10
R231
10
R232
10
R233
10
R234
10
R235
10