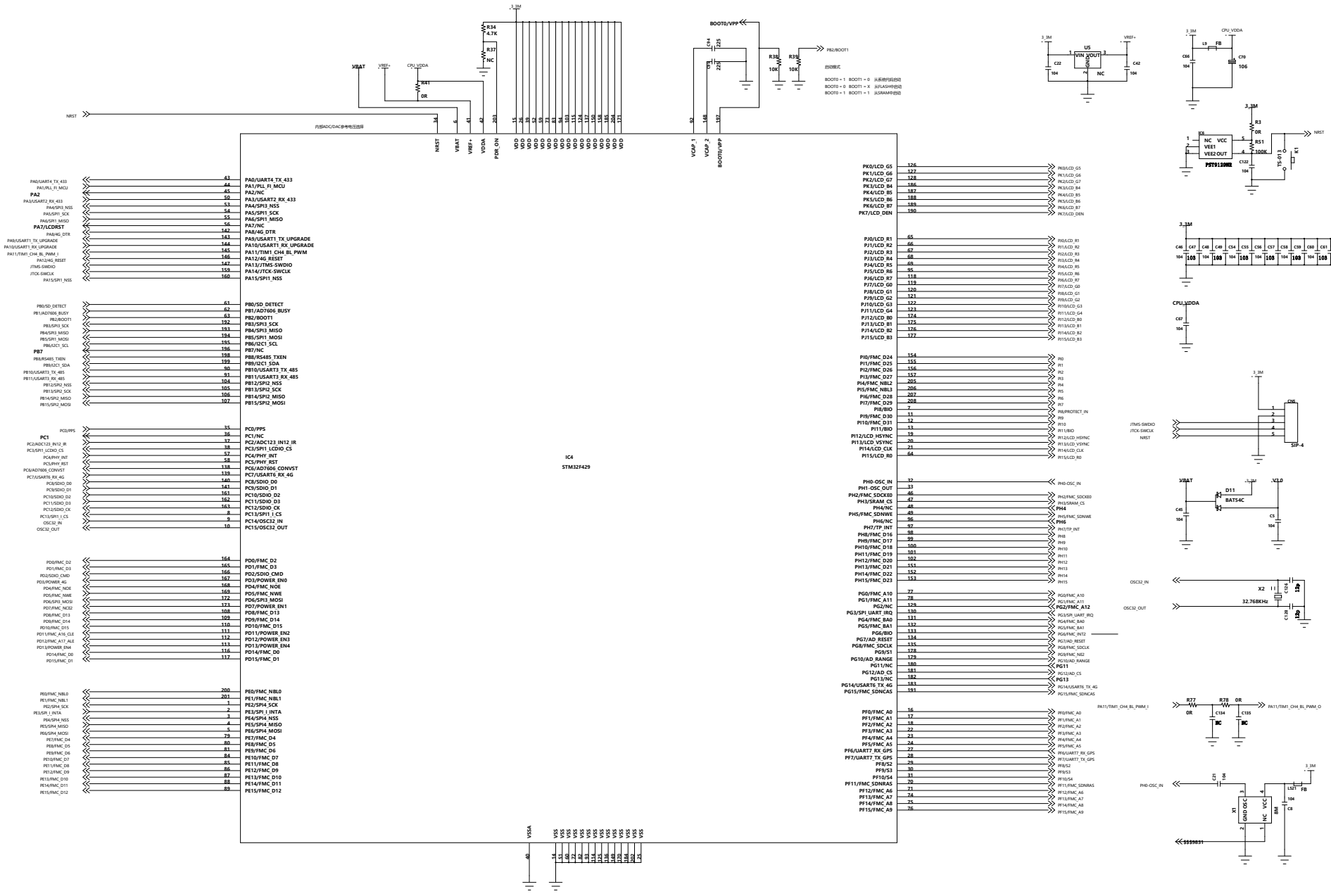

Model:		Designer:	
Filename:		Check:	
File NO.:		Approve:	
REV:	Page: of	DATE:	

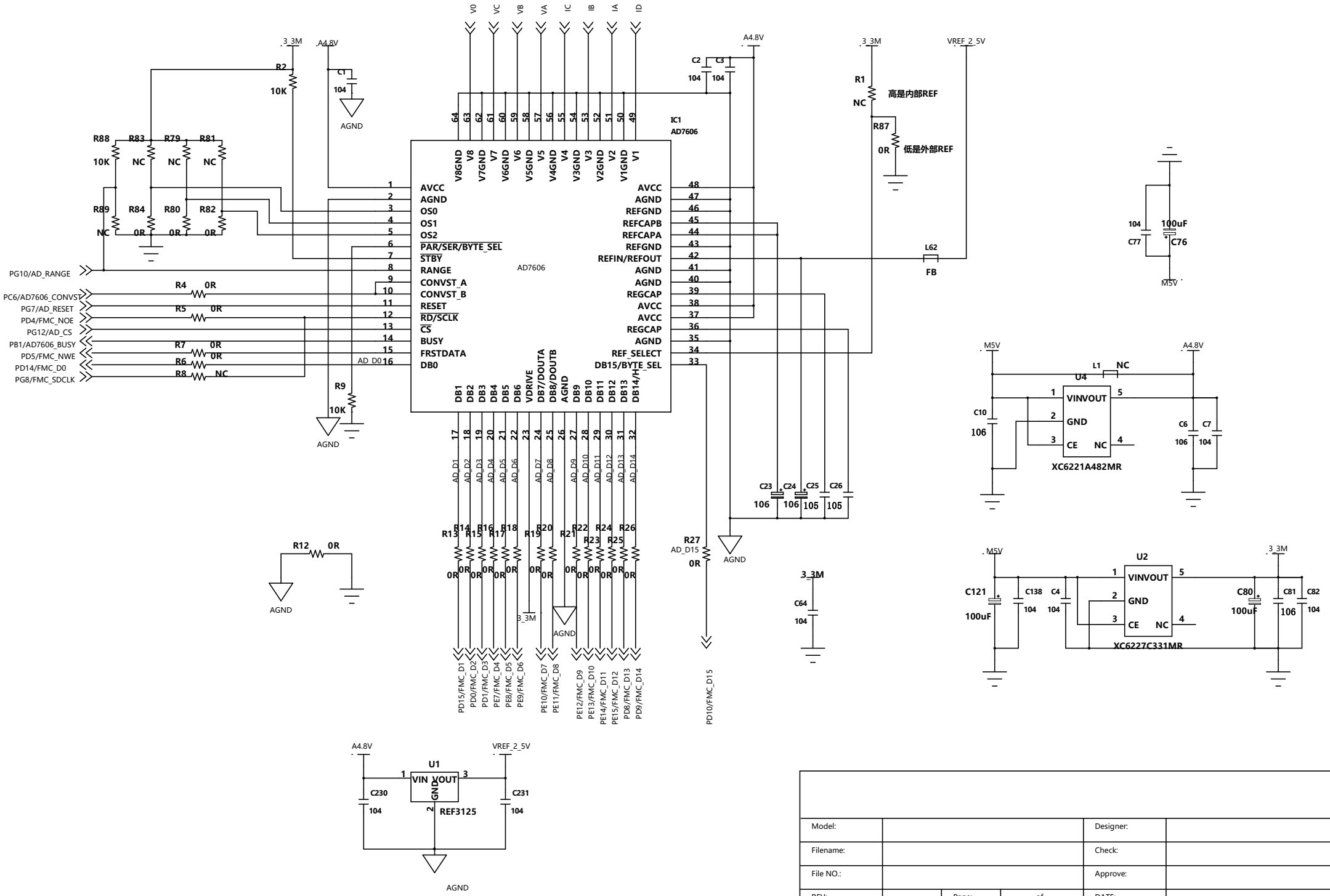

Model:				Designer:	
Filename:				Check:	
File NO.:				Approve:	
REV:		Page:	of	DATE:	

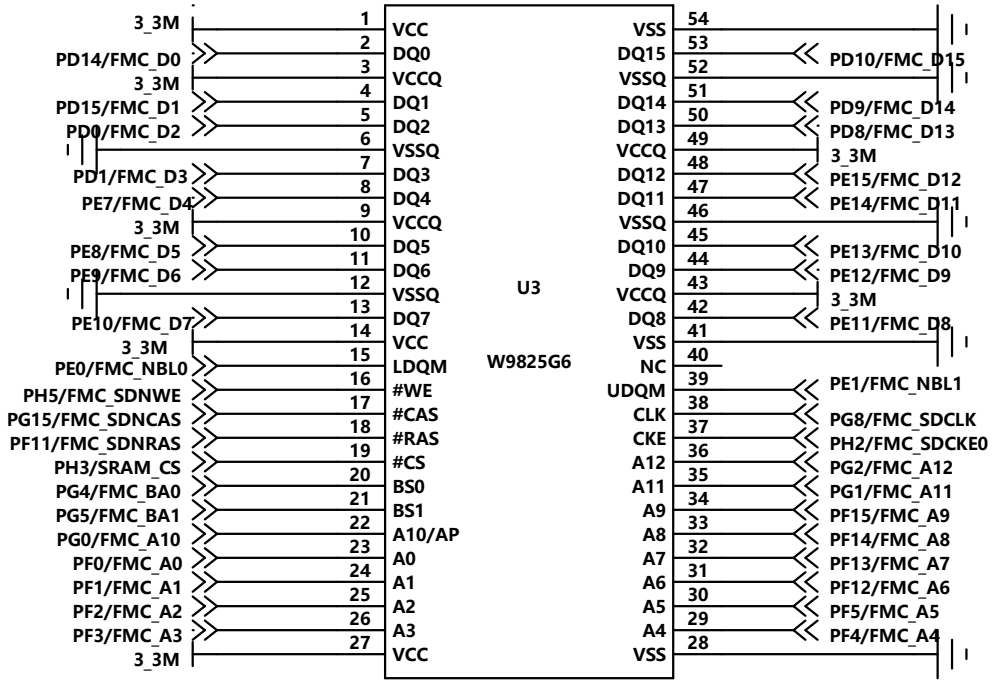

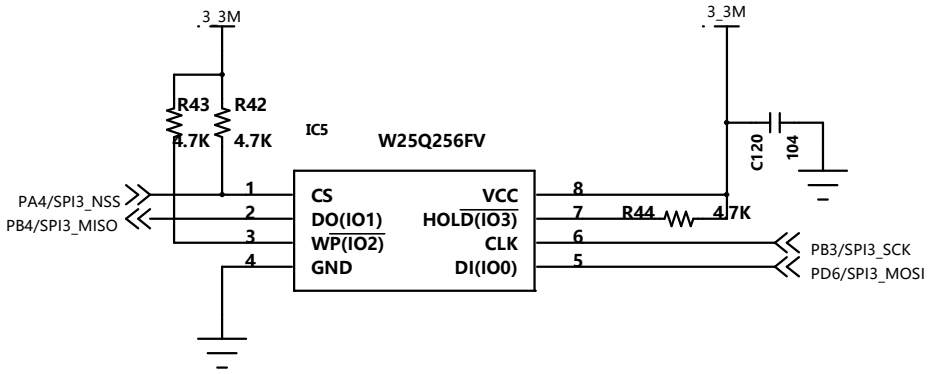

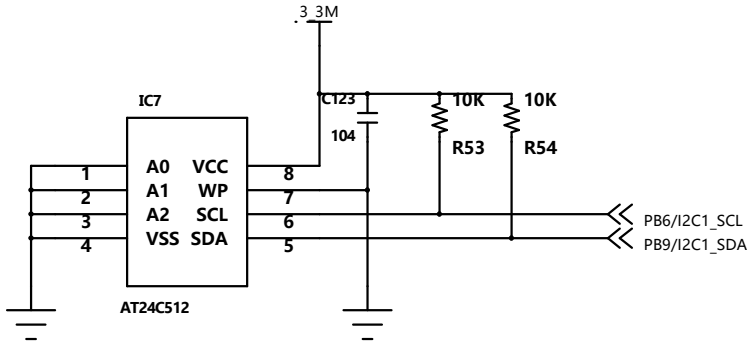

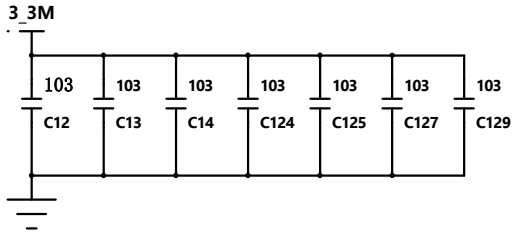

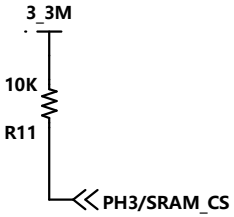

Model:				Designer:	
Filename:				Check:	
File NO.:				Approve:	
REV:		Page:	of	DATE:	

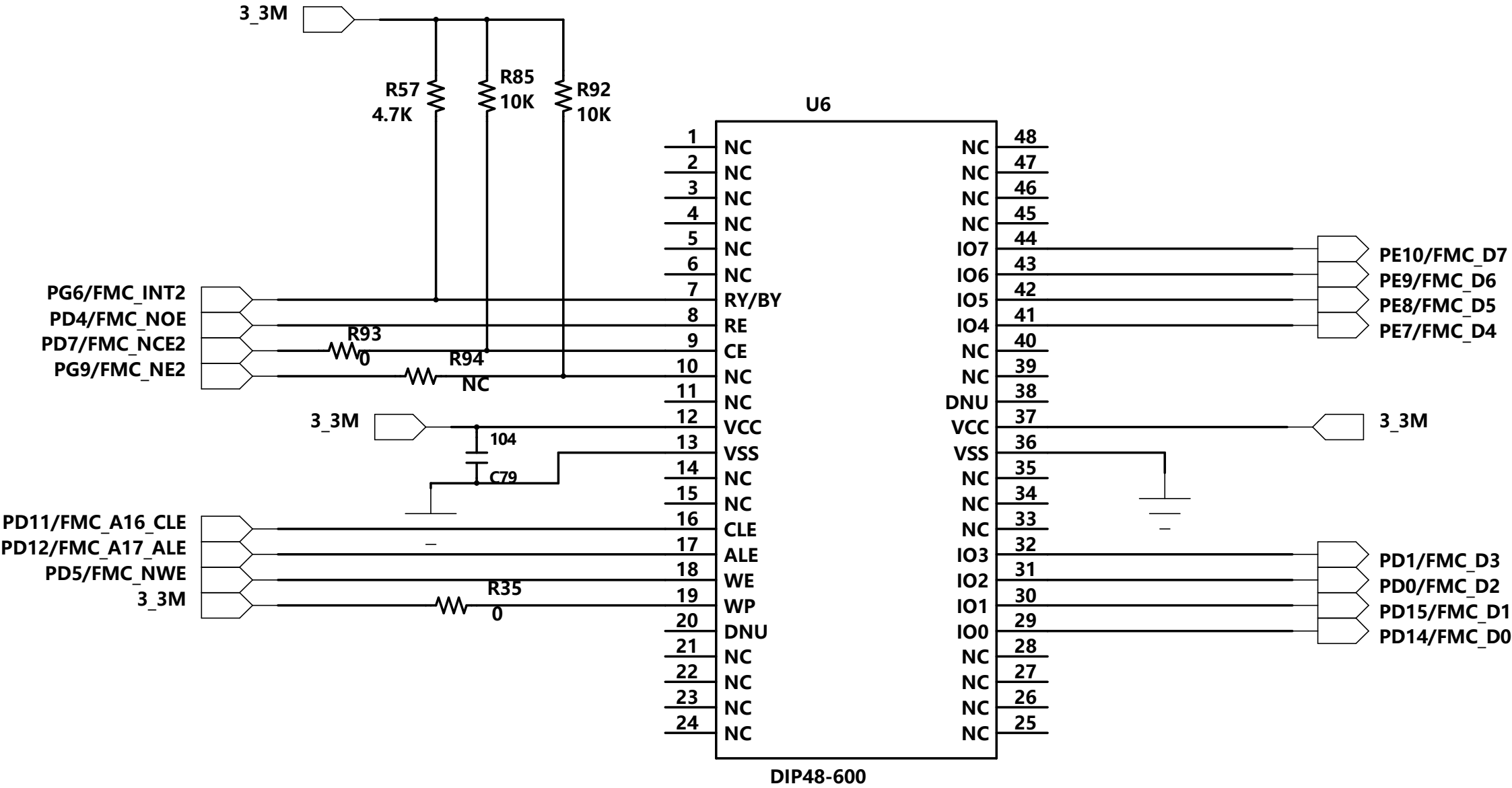
3_3M
R57
4.7K
R85
10K
R92
10K
U6
PG6/FMC_INT2
PD4/FMC_NOE
PD7/FMC_NCE2
PG9/FMC_NE2
R93
0
R94
NC
3_3M
104
C79
PD11/FMC_A16_CLE
PD12/FMC_A17_ALE
PD5/FMC_NWE
3_3M
R35
0
1 NC
2 NC
3 NC
4 NC
5 NC
6 NC
7 RY/BY
8 RE
9 CE
10 NC
11 NC
12 VCC
13 VSS
14 NC
15 NC
16 CLE
17 ALE
18 WE
19 WP
20 DNU
21 NC
22 NC
23 NC
24 NC
48 NC
47 NC
46 NC
45 NC
44 IO7
43 IO6
42 IO5
41 IO4
40 NC
39 NC
38 DNU
37 VCC
36 VSS
35 NC
34 NC
33 NC
32 IO3
31 IO2
30 IO1
29 IO0
28 NC
27 NC
26 NC
25 NC
PE10/FMC_D7
PE9/FMC_D6
PE8/FMC_D5
PE7/FMC_D4
3_3M
PD1/FMC_D3
PD0/FMC_D2
PD15/FMC_D1
PD14/FMC_D0
DIP48-600

W29N01

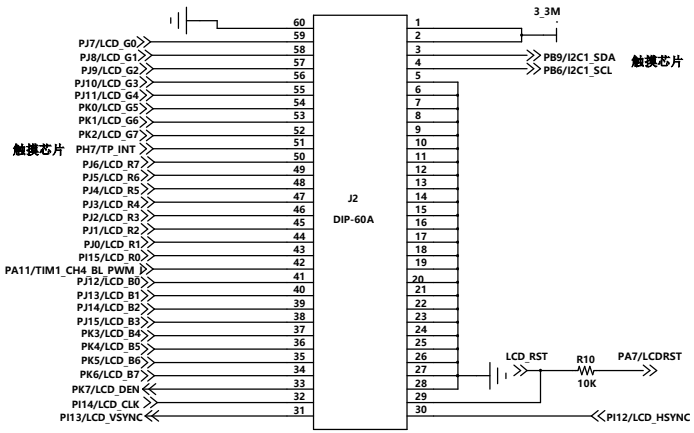

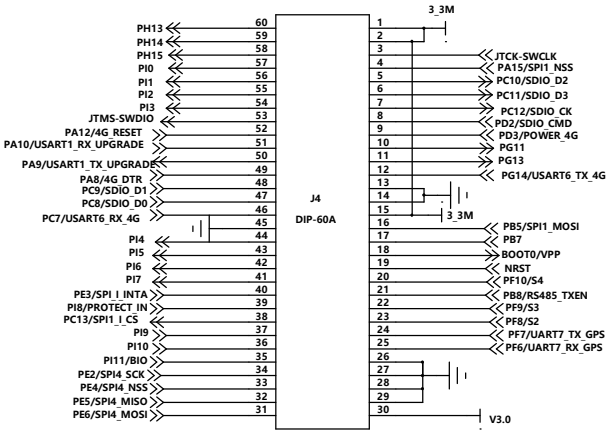

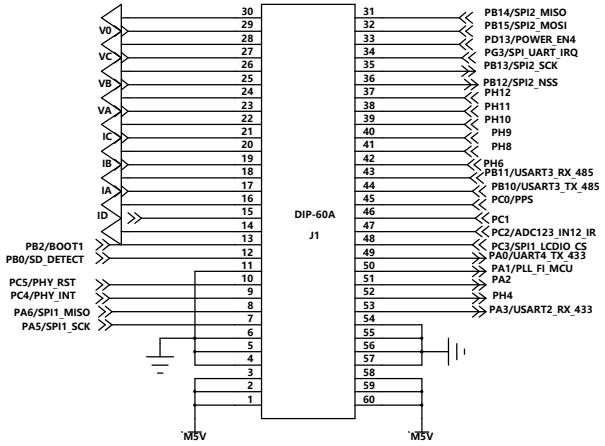

Model:				Designer:	
Filename:				Check:	
File NO.:				Approve:	
REV:		Page:	of	DATE:	