CS4330: CNN, RNN, LSTM

- Detour to Justin Johnson's slides:
- https://web.eecs.umich.edu/~justincj/teaching/eecs498/WI2022/schedule.html
  - 598_WI2022_lecture16_RNN.pdf, slides 6-25
  - The subsequent slides in this deck are great, and supplement the content here.

Recurrent Neural Networks (RNN)

Neural Network

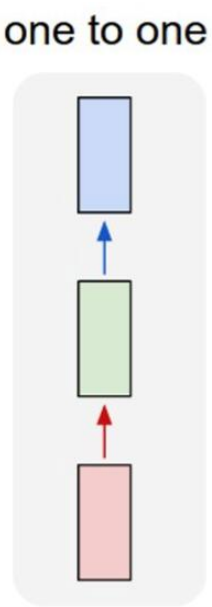

Recurrent Neural Networks

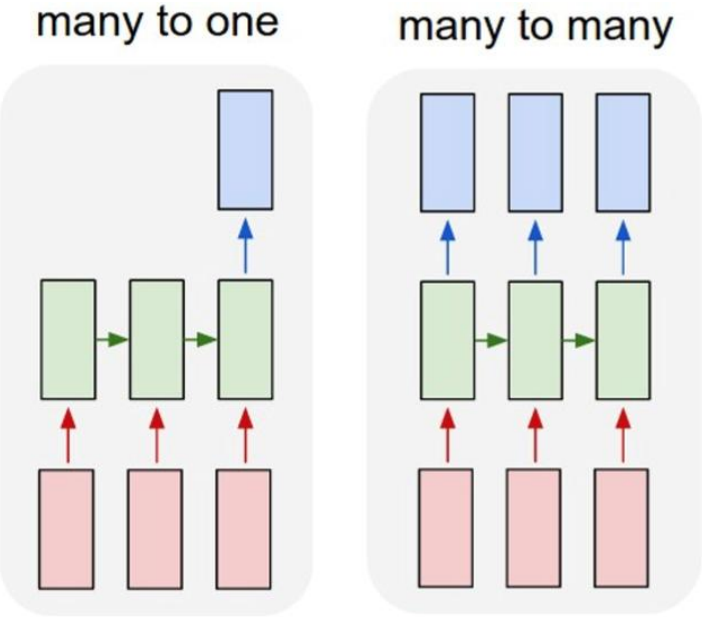

→ Green arrow: state (memory)

Text + graphics credit Andrej Karpathy & Justin Johnson

Recurrent Neural Networks (RNN)

Given characters 1, 2, …, t-1, model predicts character t

$$h_t = \tanh(W_{hh} h_{t-1} + W_{xh} x_t)$$

Training sequence: ”hello”

Vocabulary: [h, e, l, o]

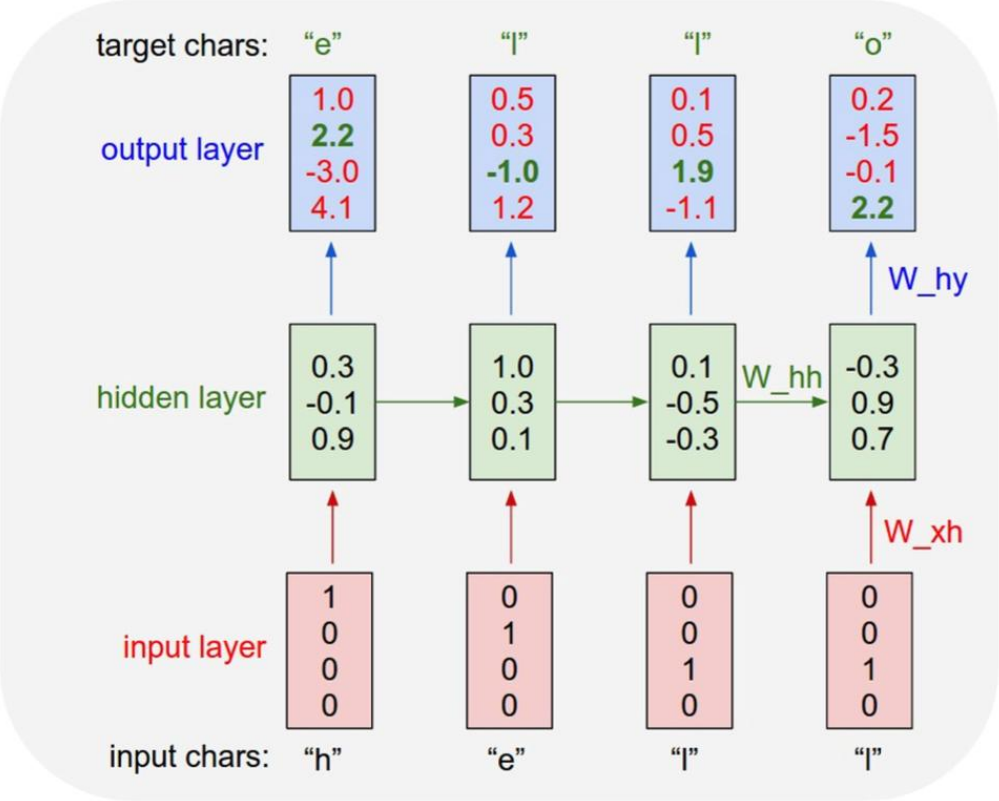

Text + graphics credit Andrej Karpathy & Justin Johnson

From RNN to Generative AI

Feed the output back into the network at t+1:

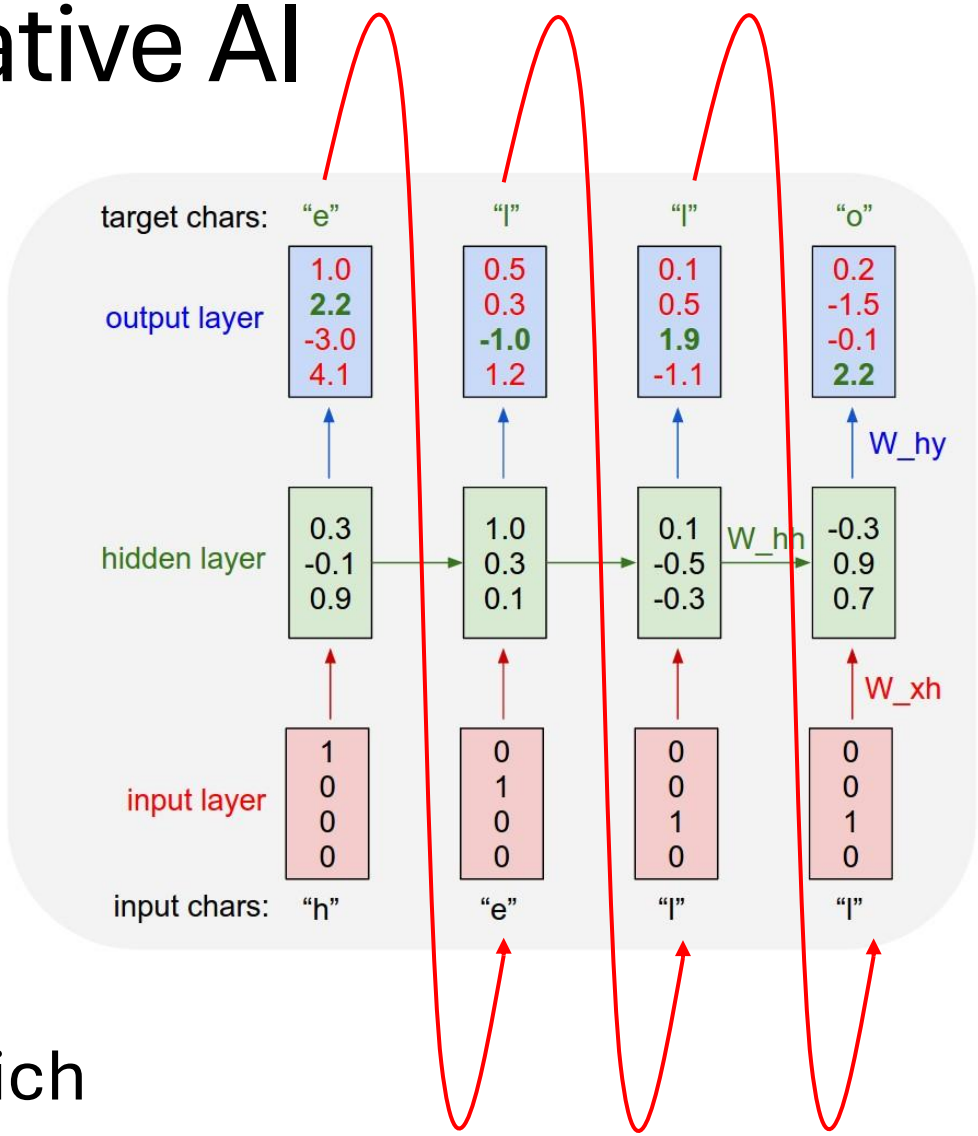

Slide from Justin Johnson, UMich

Generative AI

Andrej Karpathy blog

The Unreasonable Effectiveness of Recurrent Neural Networks

May 21, 2015

https://karpathy.github.io/2015/05/21/rnn-effectiveness/

- Learns words, English
- Produces Shakespearean plays
- Programs computer code
- Writes good-looking (but wrong) mathematical proofs
- Draws hallucinated house numbers

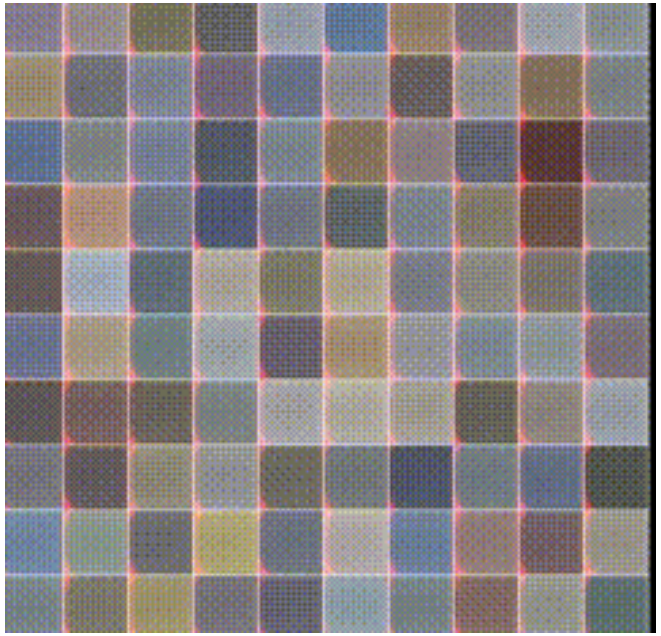

Recurrent NNs

activation $a^{<t>} = g_1(W_{aa}a^{<t-1>} + W_{ax}x^{<t>} + b_a)$

output $y^{<t>} = g_2(W_{ya}a^{<t>} + b_y)$

https://stanford.edu/~shervine/teaching/cs-230/cheatsheet-recurrent-neural-networks

Traditional NN

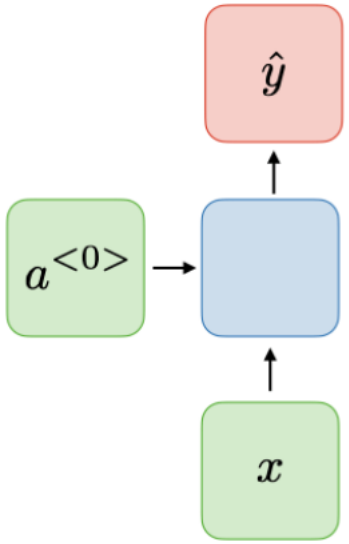

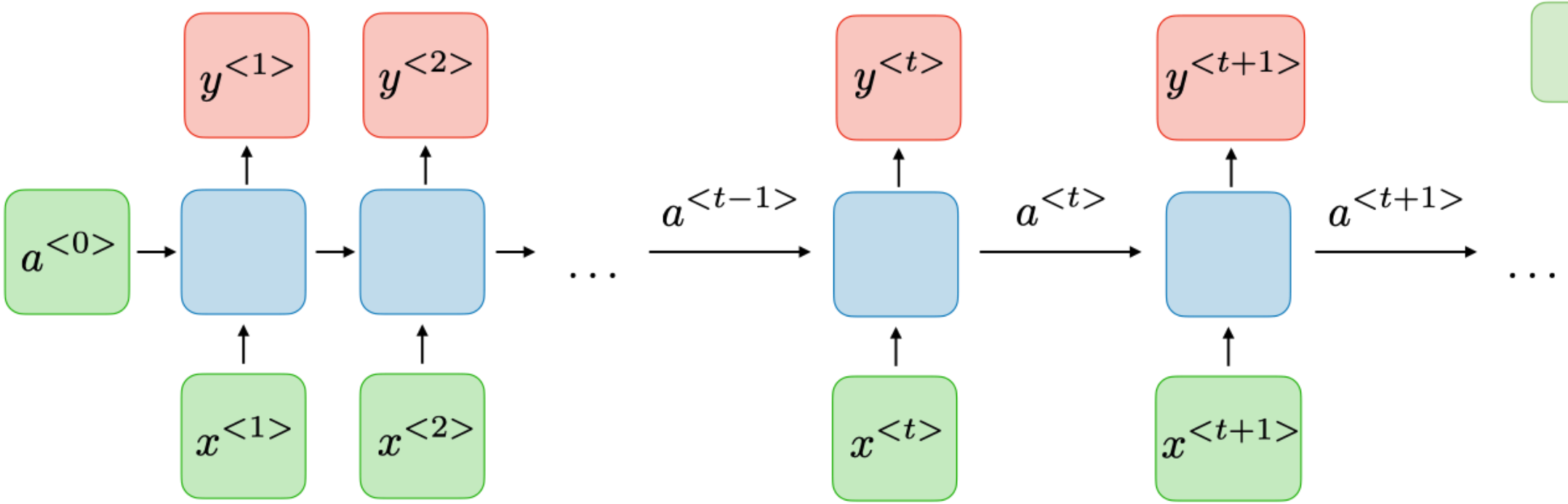

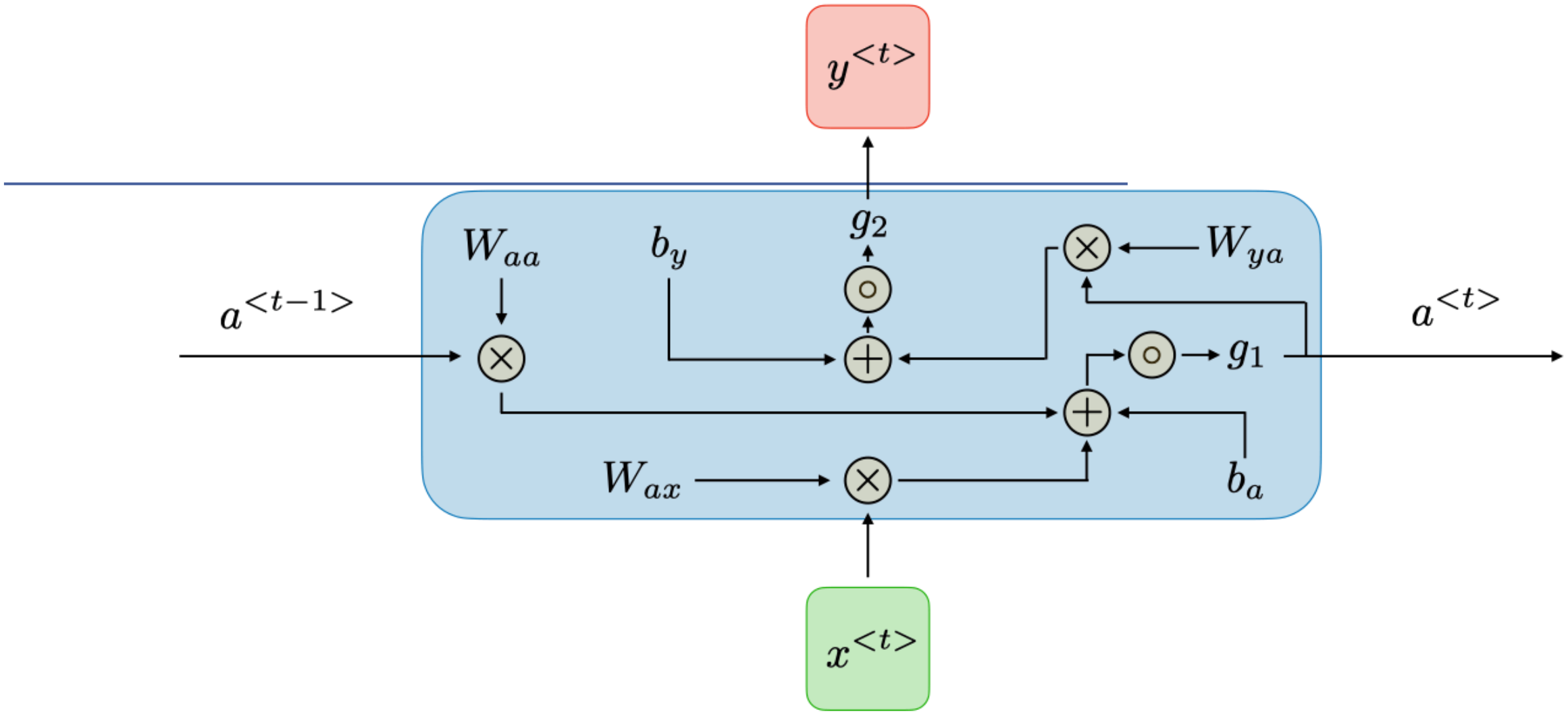
$y^{<t>}$
W_{aa}
b_y
g_2
W_{ya}
$a^{<t-1>}$
$a^{<t>}$
g_1
W_{ax}
b_a
$x^{<t>}$

Long Short-Term Memory 1

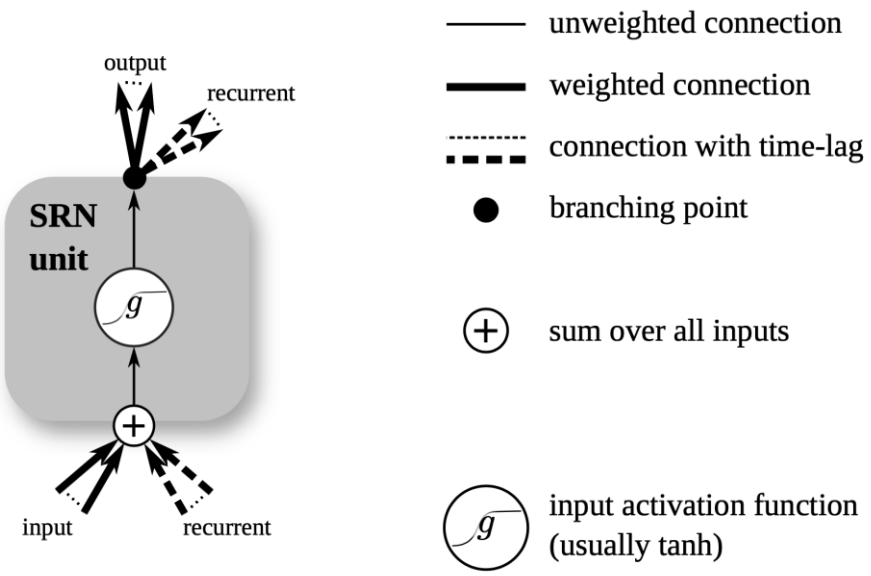

Simple Recurrent Network (SRN) unit

[LSTM: A Search Space Odyssey]

Long Short-Term Memory 2

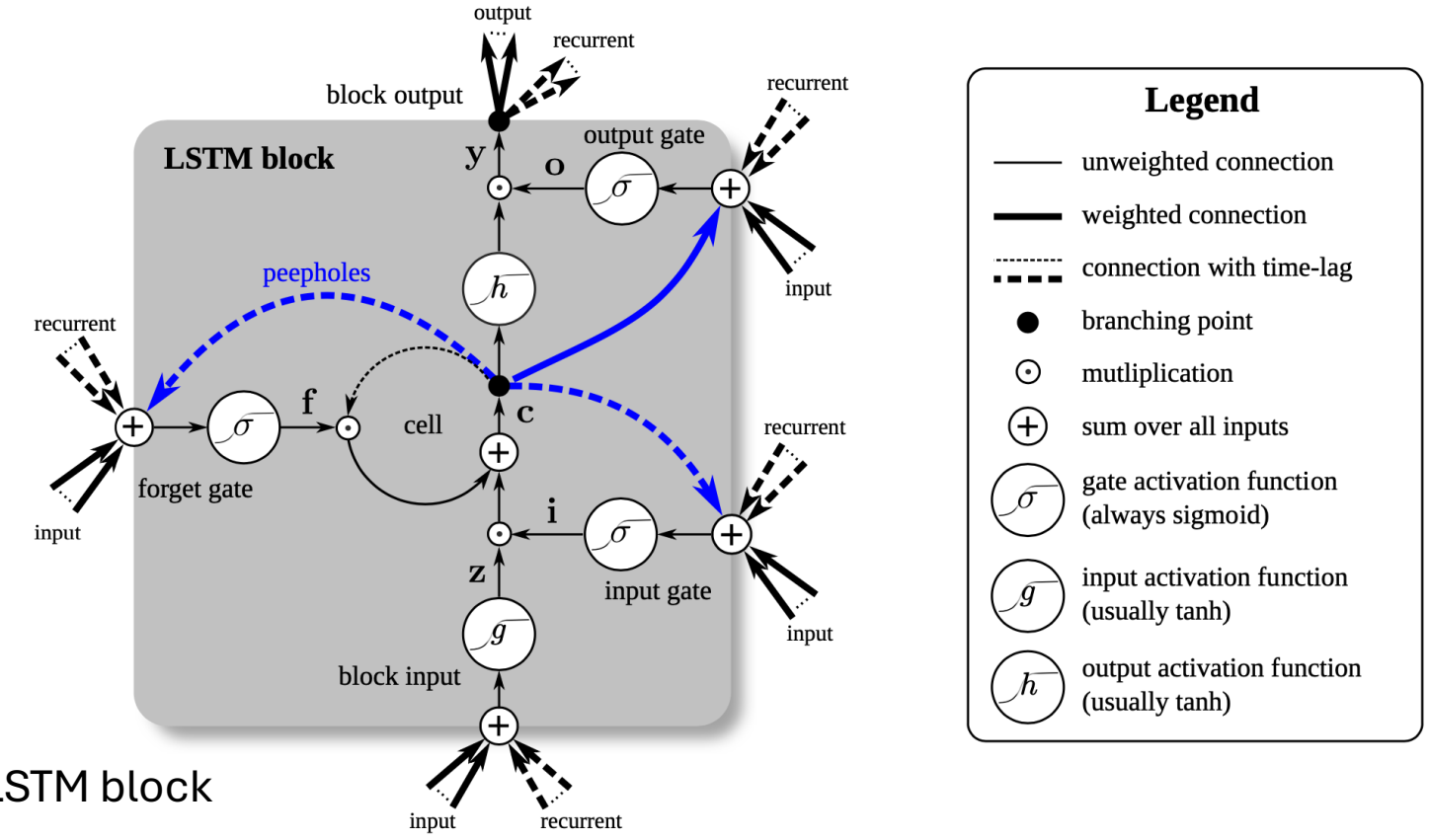

LSTM block

[LSTM: A Search Space Odyssey]

Long Short-Term Memory 3

Forward pass

Input weights: $\mathbf{W}_z, \mathbf{W}_i, \mathbf{W}_f, \mathbf{W}_o \in \mathbb{R}^{N \times M}$

Recurrent weights: $\mathbf{R}_z, \mathbf{R}_i, \mathbf{R}_f, \mathbf{R}_o \in \mathbb{R}^{N \times N}$

Peephole weights: $\mathbf{p}_i, \mathbf{p}_f, \mathbf{p}_o \in \mathbb{R}^{N}$

Bias weights: $\mathbf{b}_z, \mathbf{b}_i, \mathbf{b}_f, \mathbf{b}_o \in \mathbb{R}^{N}$

$$\bar{\mathbf{z}}^t = \mathbf{W}_z \mathbf{x}^t + \mathbf{R}_z \mathbf{y}^{t-1} + \mathbf{b}_z$$

$$\mathbf{z}^t = g(\bar{\mathbf{z}}^t) \qquad \textit{block input}$$

$$\bar{\mathbf{i}}^t = \mathbf{W}_i \mathbf{x}^t + \mathbf{R}_i \mathbf{y}^{t-1} + \mathbf{p}_i \odot \mathbf{c}^{t-1} + \mathbf{b}_i$$

$$\mathbf{i}^t = \sigma(\bar{\mathbf{i}}^t) \qquad \textit{input gate}$$

$$\bar{\mathbf{f}}^t = \mathbf{W}_f \mathbf{x}^t + \mathbf{R}_f \mathbf{y}^{t-1} + \mathbf{p}_f \odot \mathbf{c}^{t-1} + \mathbf{b}_f$$

$$\mathbf{f}^t = \sigma(\bar{\mathbf{f}}^t) \qquad \textit{forget gate}$$

$$\mathbf{c}^t = \mathbf{z}^t \odot \mathbf{i}^t + \mathbf{c}^{t-1} \odot \mathbf{f}^t \qquad \textit{cell}$$

$$\bar{\mathbf{o}}^t = \mathbf{W}_o \mathbf{x}^t + \mathbf{R}_o \mathbf{y}^{t-1} + \mathbf{p}_o \odot \mathbf{c}^t + \mathbf{b}_o$$

$$\mathbf{o}^t = \sigma(\bar{\mathbf{o}}^t) \qquad \textit{output gate}$$

$$\mathbf{y}^t = h(\mathbf{c}^t) \odot \mathbf{o}^t \qquad \textit{block output}$$

[LSTM: A Search Space Odyssey]

Transformers: Self-Attention

The animal didn't cross the street because it was too tired.
L'animal n'a pas traversé la rue parce qu'il était trop fatigué.

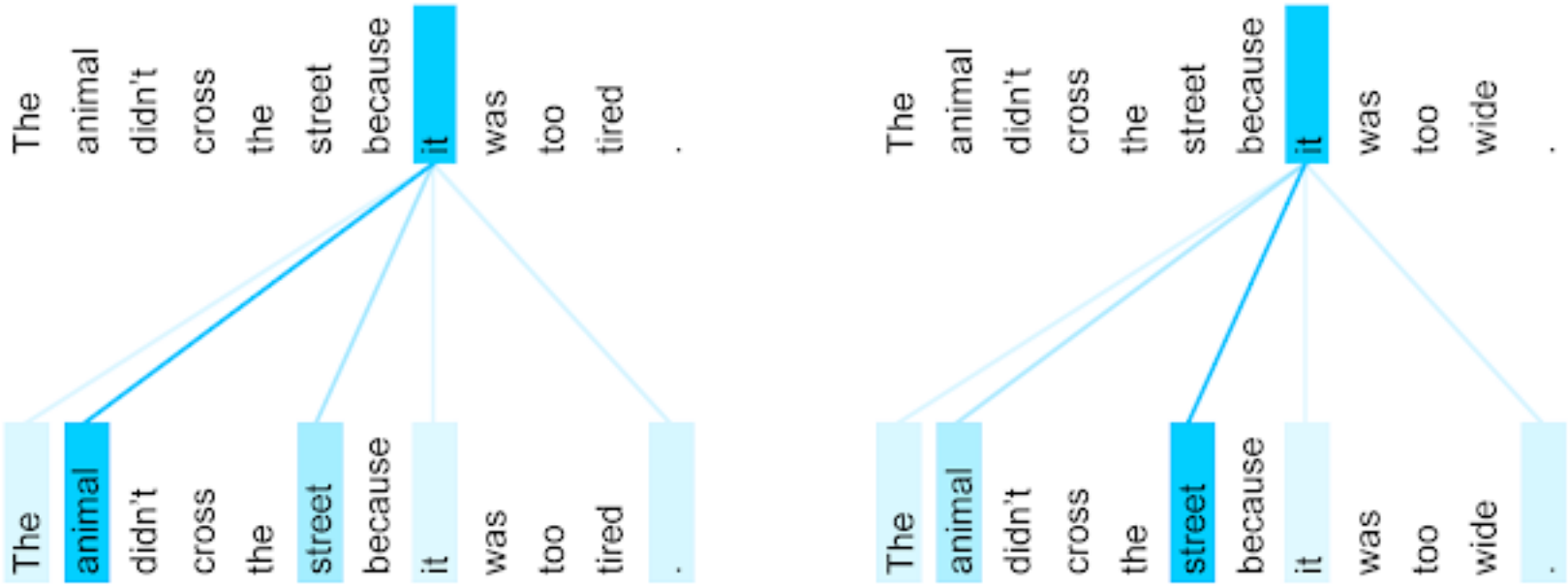

https://ai.googleblog.com/2017/08/transformer-novel-neural-network.html

$$\sum_i w_i x_i + b \Rightarrow \sum_i w_i a_i(\boldsymbol{x}) x_i + b$$

Convolutional Neural Networks and Generative Networks

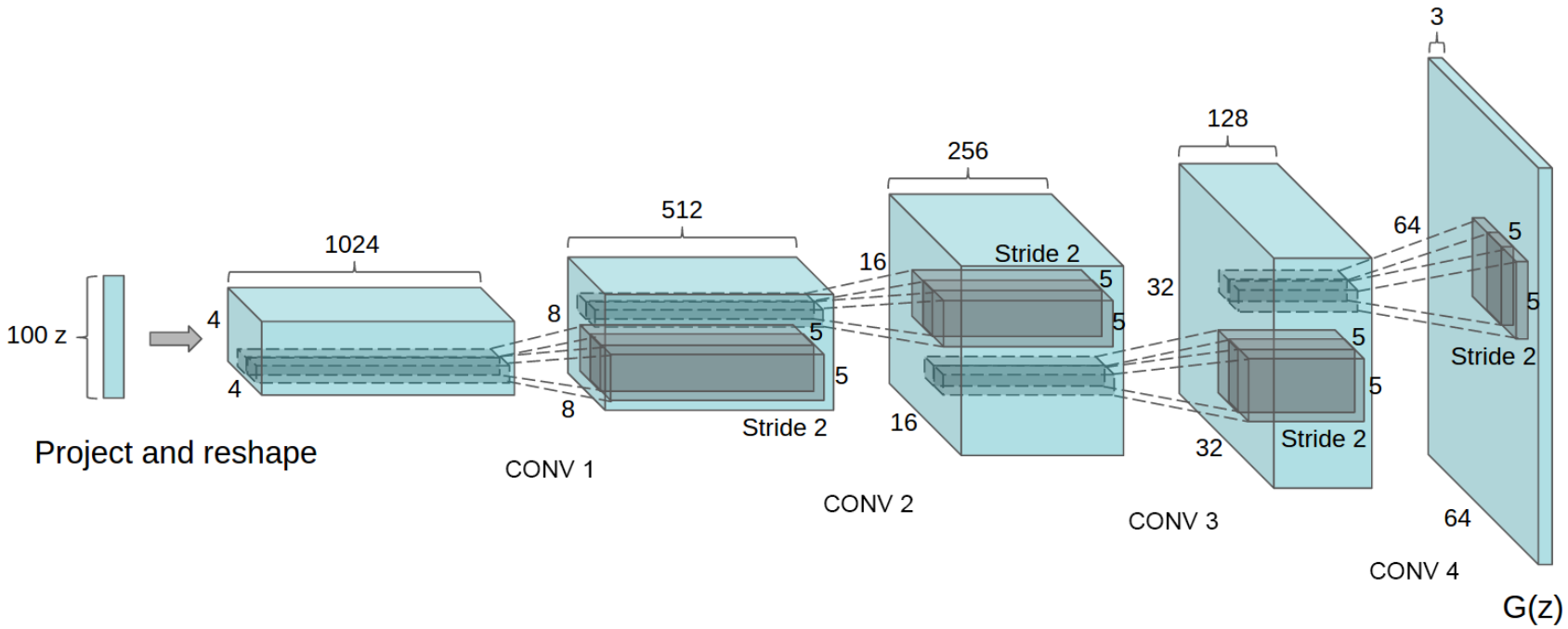

Reading

- Attention Is All You Need
- An Image is Worth 16x16 Words, Dosovitskij ea 2021
- https://d2l.ai/chapter_attention-mechanisms-and-transformers/index.html

Attention

Vision Transformers

- Replace convolutions with attention
  - Can’t do this exhaustively, too many
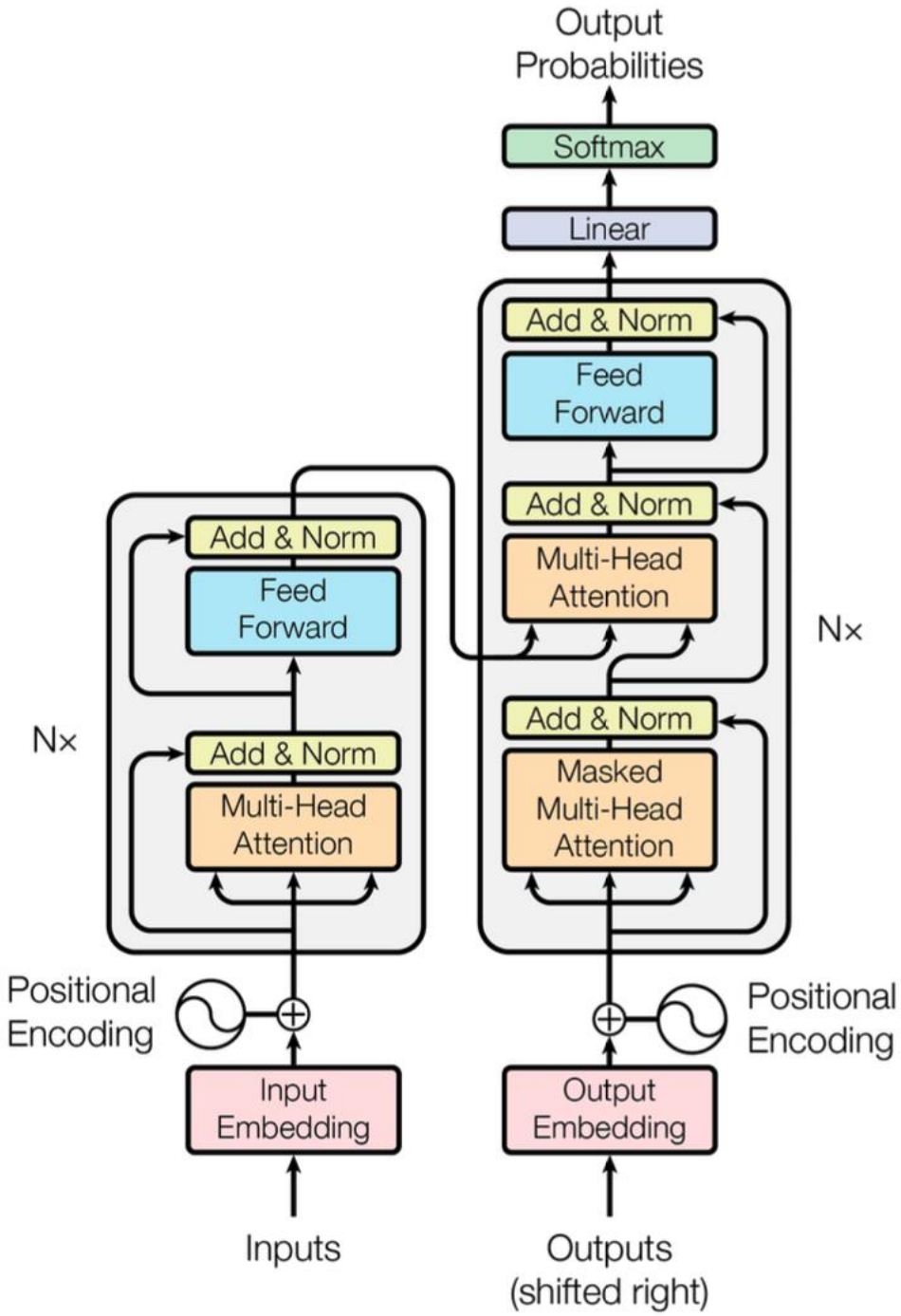
- From: Attention is all you need, NIPS 2017