1. ATM A and ATM B both request to access at the same time

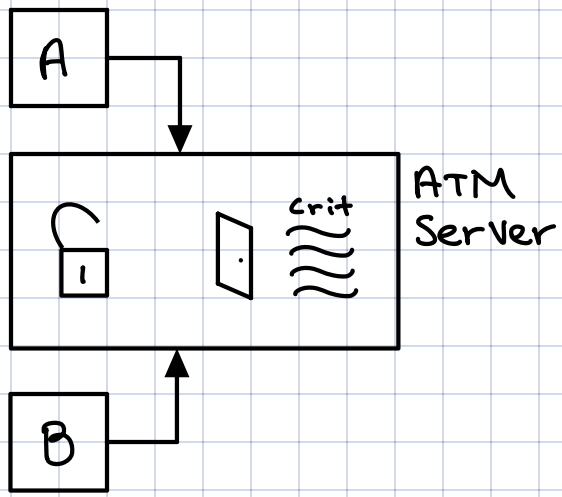

2. ATM A is granted access, ATM B loops at lock

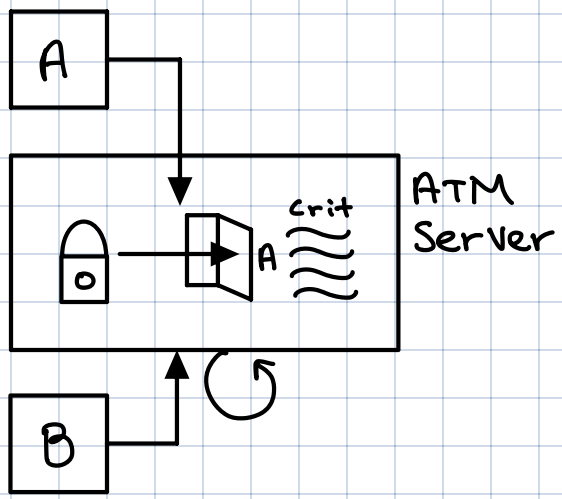

3. ATM A completes actions, releases control of lock

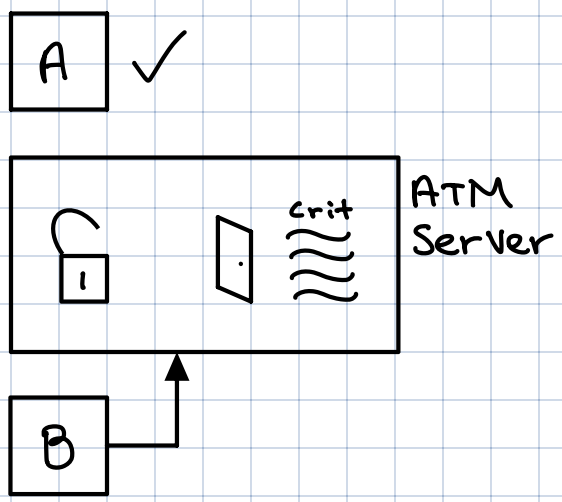

Semaphore Logic

1. User: Construct GET_BALANCE msg
→ msg(dollar_amount)
2. GOTO: WAIT(Semaphore) → Decrement
↳ 3. Send GET_BALANCE msg
4. Receive msg
5. Extract balance from msg
6. Construct new balance
7. Construct PUT_BALANCE msg
8. Send PUT_BALANCE msg
9. SIGNAL(Semaphore) → Increment

Critical Section

// 10. Loop continues

/* If dollar_amount < 0: withdraw
Else if dollar_amount == 0: read
Else if dollar_amount > 0: deposit
*/
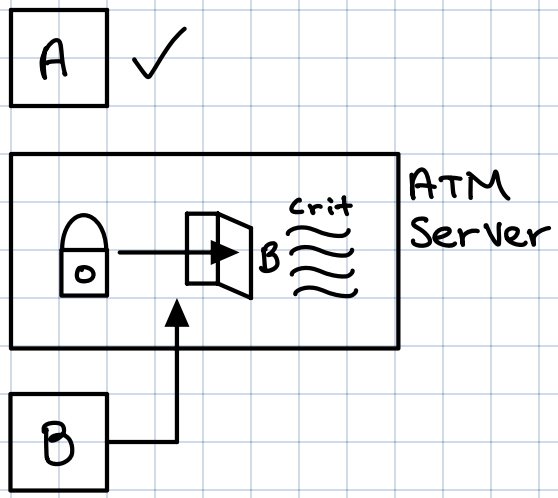
4. ATM B is granted access, cycle continues