UNIVERSIDAD EAFIT

Escuela de Ciencias Aplicadas e Ingeniería

Artificial Intelligence

Lecture10 – BERT

Contenido

1. Learning problems
2. Model architecture
3. Pre-training
4. Applications
5. Hands-on

Self supervised learning

UNIVERSIDAD EAFIT
Escuela de Ciencias Aplicadas e Ingeniería

1 - Semi-supervised training on large amounts of text (books, wikipedia..etc).

The model is trained on a certain task that enables it to grasp patterns in language. By the end of the training process, BERT has language-processing abilities capable of empowering many models we later need to build and train in a supervised way.

Semi-supervised Learning Step

Model:

Dataset:

Objective: Predict the masked word (langauge modeling)

2 - Supervised training on a specific task with a labeled dataset.

Supervised Learning Step

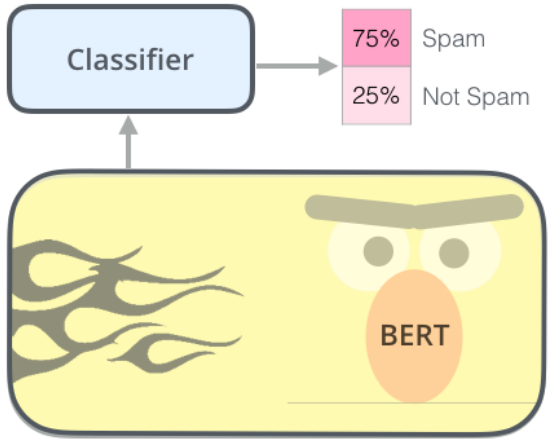

Model: (pre-trained in step #1)

Dataset:

Email message	Class
Buy these pills	Spam
Win cash prizes	Spam
Dear Mr. Atreides, please find attached…	Not Spam

Transfer learning

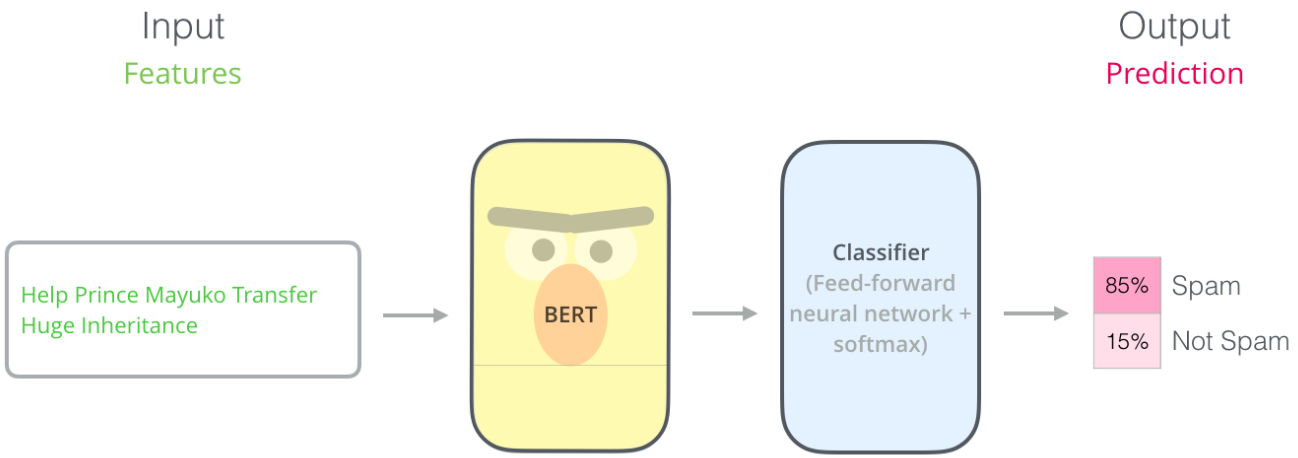

Email message	Class
Buy these pills	Spam
Win cash prizes	Spam
Dear Mr. Atreides, please find attached…	Not Spam

Model architecture

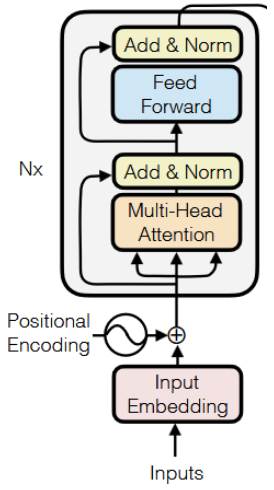

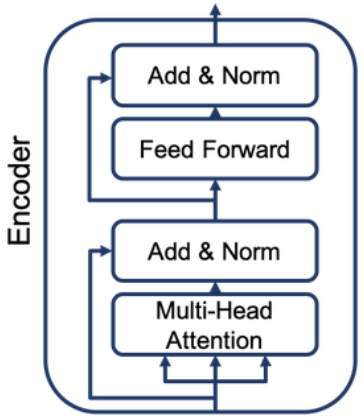

bert-base-uncased	12-layer, 768-hidden, 12-heads, 110M parameters. Trained on lower-cased English text.
bert-large-uncased	24-layer, 1024-hidden, 16-heads, 340M parameters. Trained on lower-cased English text.
bert-base-cased	12-layer, 768-hidden, 12-heads, 110M parameters. Trained on cased English text.
bert-large-cased	24-layer, 1024-hidden, 16-heads, 340M parameters. Trained on cased English text.
bert-base-multilingual-uncased	(Original, not recommended) 12-layer, 768-hidden, 12-heads, 110M parameters. Trained on lower-cased text in the top 102 languages with the largest Wikipedias (see details).
bert-base-multilingual-cased	(New, recommended) 12-layer, 768-hidden, 12-heads, 110M parameters. Trained on cased text in the top 104 languages with the largest Wikipedias (see details).

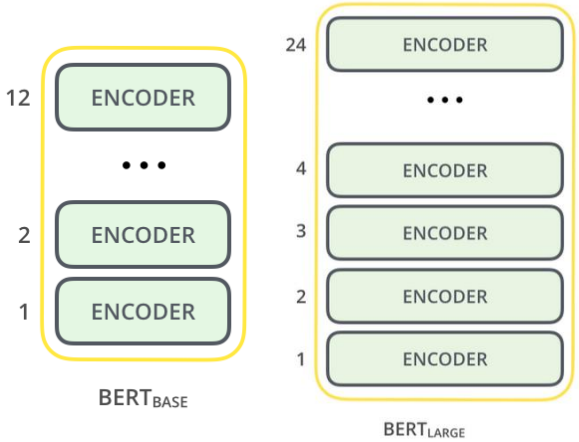

Model inputs

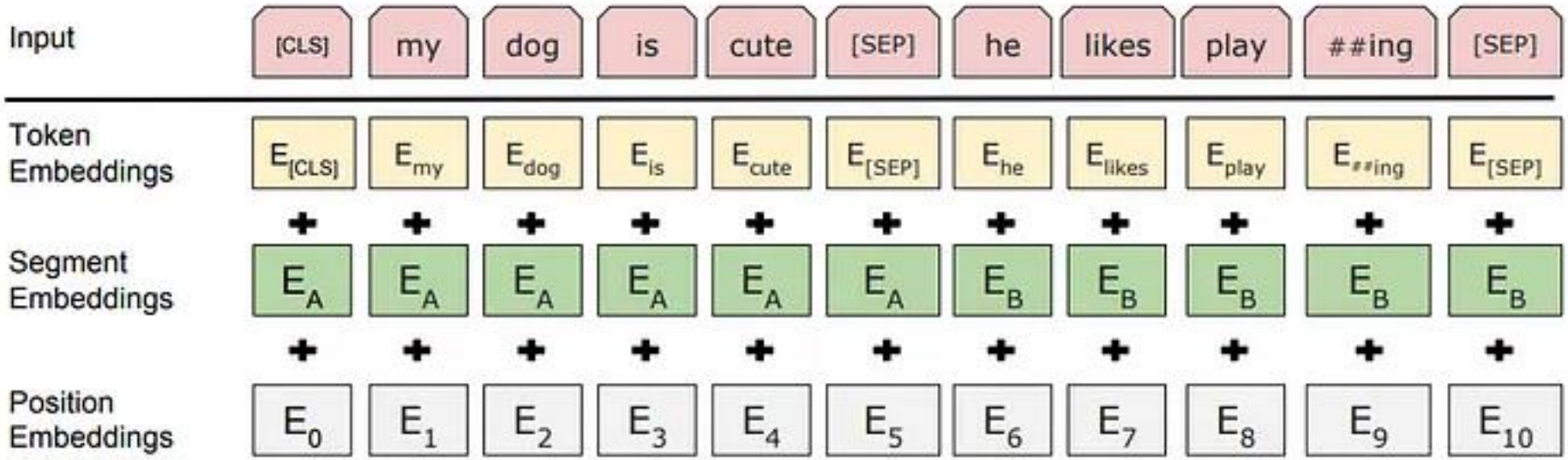

Pre-training: Masked Language Model

Use the output of the masked word's position to predict the masked word

Randomly mask 15% of tokens

Input

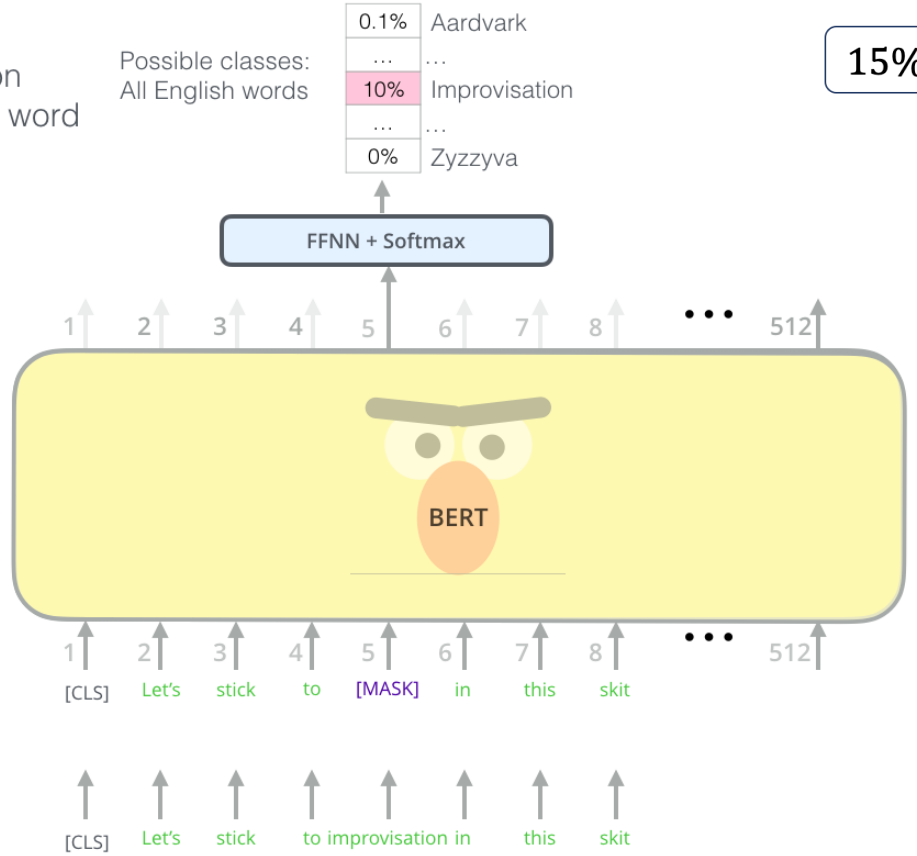

15%

80%	my dog is [MASK]
10%	my dog is apple
10%	my dog is hairy

Pre-training: Two sentences task

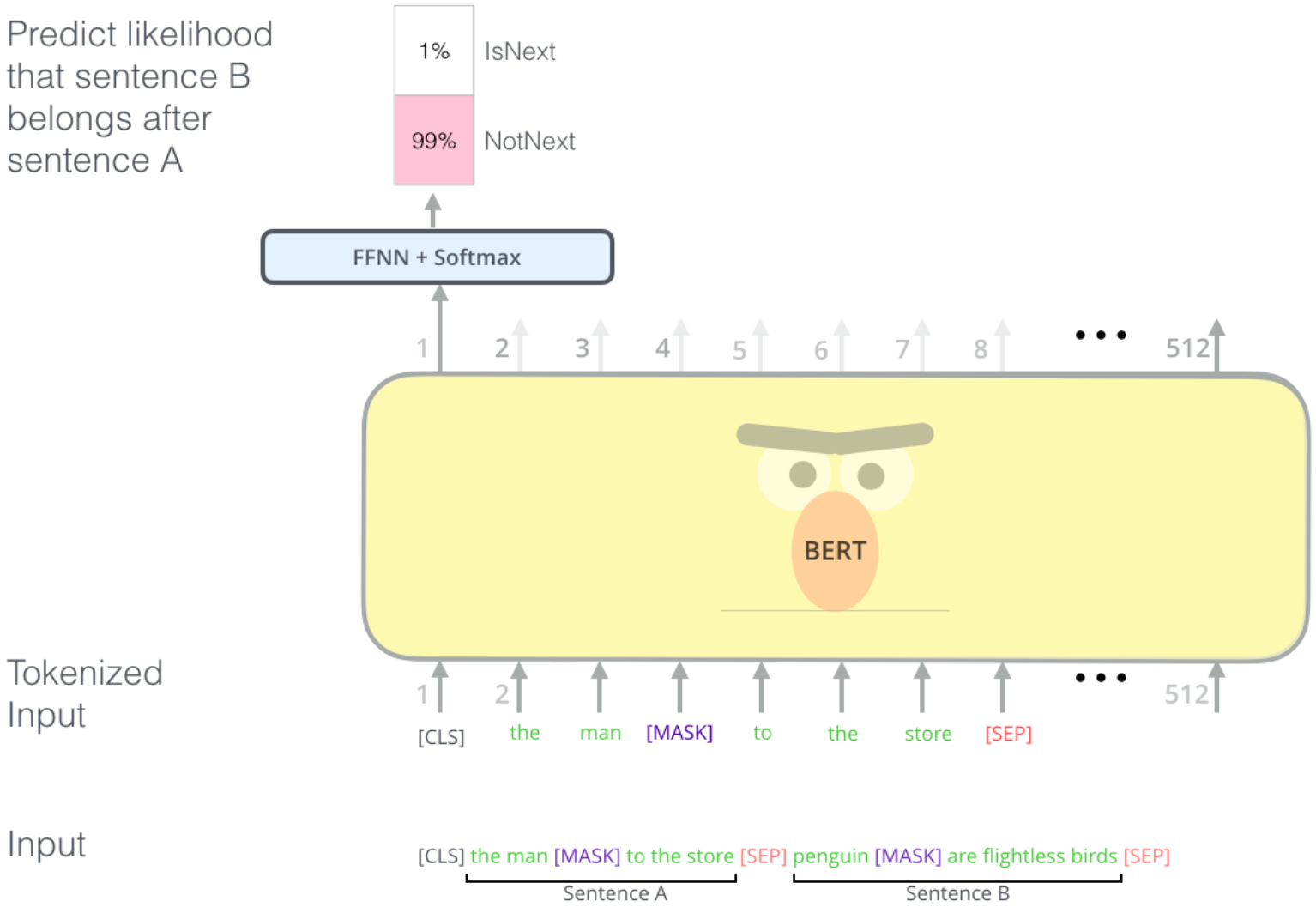

Input	[CLS] the man went to the [MASK] store [SEP] he bought a gallon [MASK] milk [SEP]
Label	IsNext
Input	[CLS] the man went to the [MASK] store [SEP] penguin [MASK] are flight ##less birds [SEP]
Label	NotNext

BERT Specific tasks

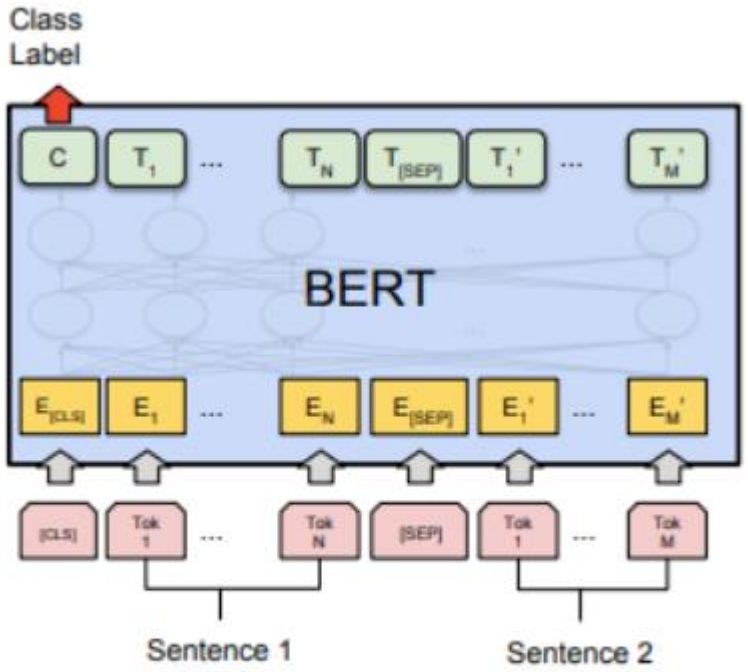

(a) Sentence Pair Classification Tasks: MNLI, QQP, QNLI, STS-B, MRPC, RTE, SWAG

📌 **Objective**: Determine the relationship between two sentences.

✅ **Input**:

- Two sentences are concatenated with a [SEP] token in between.
- [CLS] is added at the beginning.
- Each token gets embeddings (**word, segment, positional**).

✅ **BERT Processing**:

- Applies **self-attention** over both sentences.
- [CLS] token is used to represent the **entire input**.

✅ **Output**:

- A **classifier** (fully connected layer + softmax) is applied to the [CLS] token to predict the **relationship** between sentences (e.g., entailment, contradiction).

BERT Specific tasks

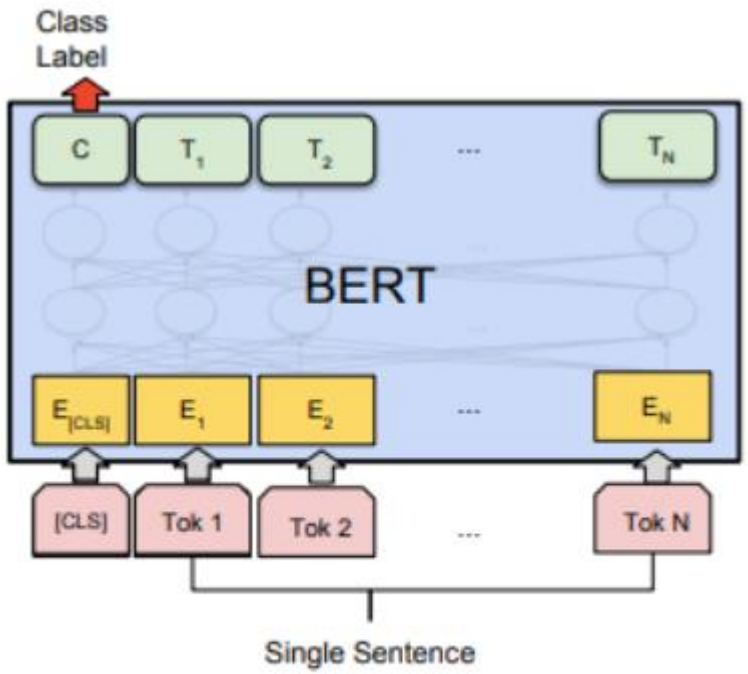

(b) Single Sentence Classification Tasks: SST-2, CoLA

📌 **Objective**: Classify the **entire sentence** into a category (e.g., sentiment analysis).

✅ **Input**:

- A single sentence with a [CLS] token at the start.

✅ **BERT Processing**:

- Self-attention processes the sentence.

✅ **Output**:

- The classifier is applied to the [CLS] token, which encodes sentence-level information.

BERT Specific tasks

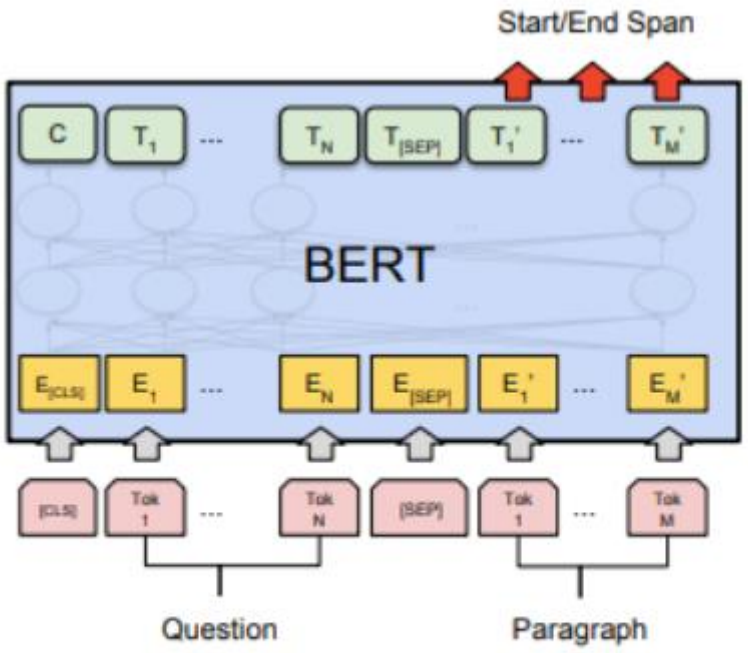

(c) Question Answering Tasks: SQuAD v1.1

📌 **Objective**:Find the **start and end** of the answer span in a paragraph given a question.

✅ **Input**:

- The **question** and **paragraph** are separated by [SEP].

✅ **BERT Processing**:

- Self-attention captures relationships between the **question and the paragraph.**

✅ **Output**:

- Two classifiers predict:
    1. **Start position** of the answer.
    2. **End position** of the answer.

BERT Specific tasks

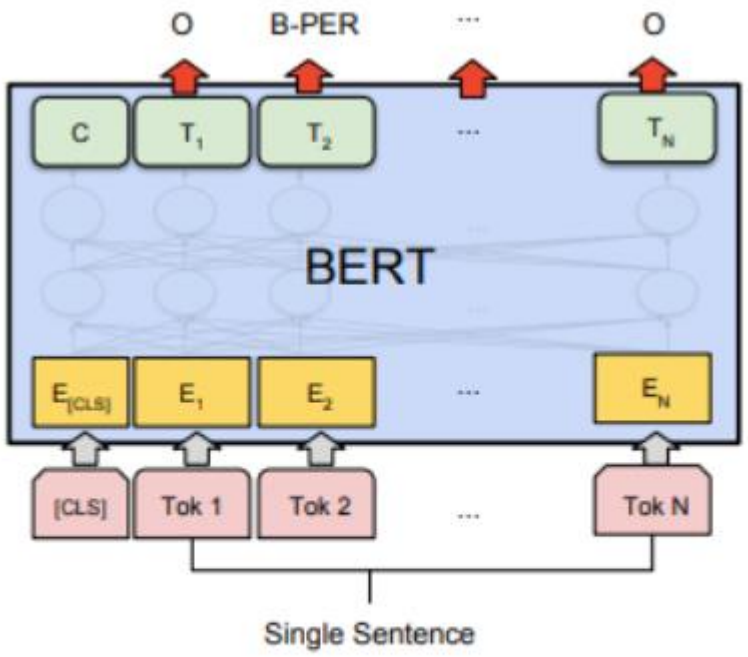

(d) Single Sentence Tagging Tasks: CoNLL-2003 NER

📌 **Objective**:Assign a **label** to each token in the sentence (e.g., Person, Organization, Location).

✅ **Input**:

- A single sentence with a [CLS] token

✅ **BERT Processing**:

- Self-attention captures context for each Word

✅ **Output**:

- Instead of using the [CLS] token, **each token** has its **own classification.**
- Labels are assigned to **each token** (e.g., "B-PER" for "beginning of a person’s name").

Suggested readings

https://huggingface.co/blog/bert-101

https://huggingface.co/blog/pretraining-bert