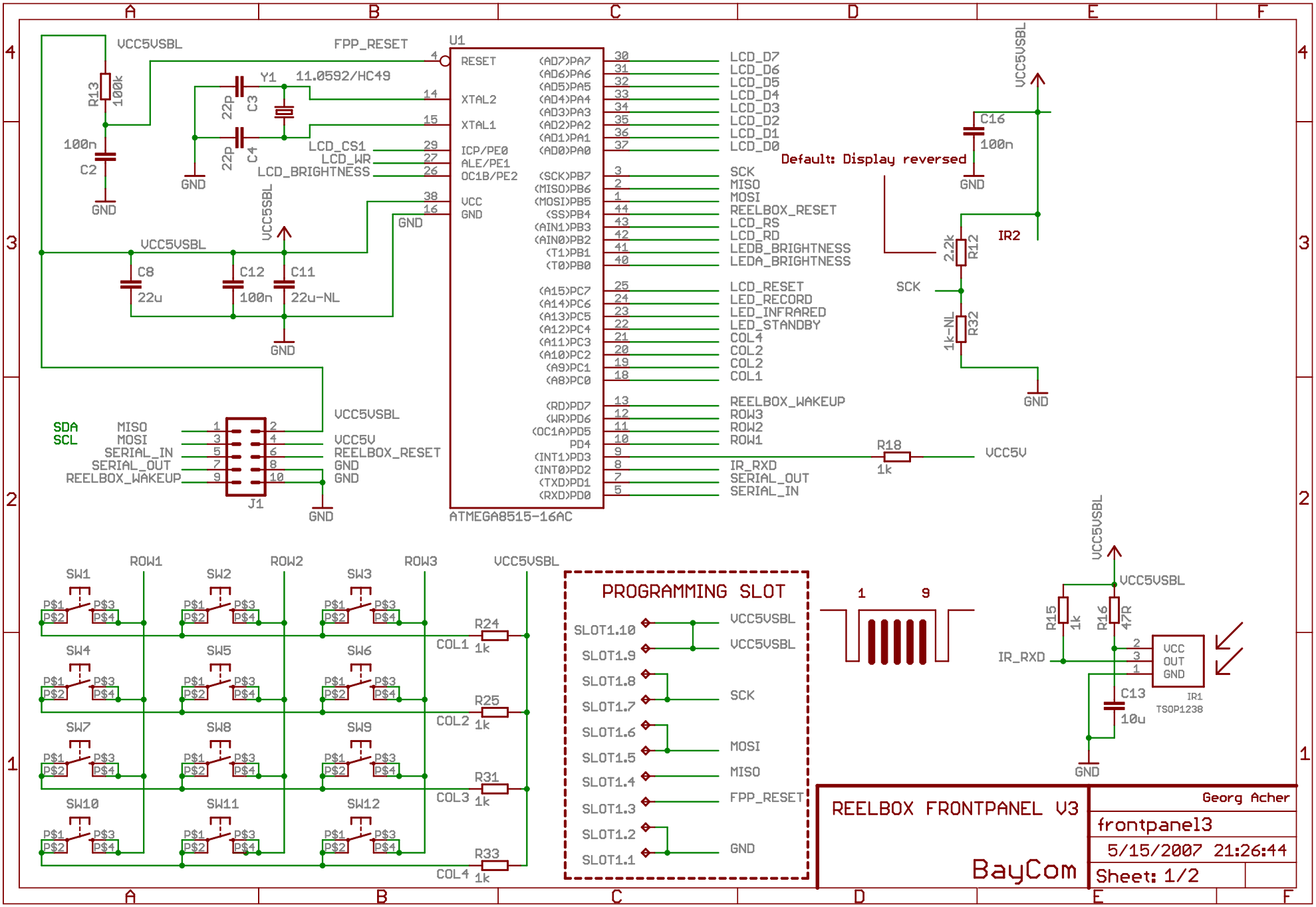
U1
ATMEGA8515-16AC
RESET
XTAL2
XTAL1
ICP/PE0
ALE/PE1
OC1B/PE2
VCC
GND
(AD7)PA7
(AD6)PA6
(AD5)PA5
(AD4)PA4
(AD3)PA3
(AD2)PA2
(AD1)PA1
(AD0)PA0
(SCK)PB7
(MISO)PB6
(MOSI)PB5
(SS)PB4
(AIN1)PB3
(AIN0)PB2
(T1)PB1
(T0)PB0
(A15)PC7
(A14)PC6
(A13)PC5
(A12)PC4
(A11)PC3
(A10)PC2
(A9)PC1
(A8)PC0
(RD)PD7
(WR)PD6
(OC1A)PD5
PD4
(INT1)PD3
(INT0)PD2
(TXD)PD1
(RXD)PD0
LCD_D7
LCD_D6
LCD_D5
LCD_D4
LCD_D3
LCD_D2
LCD_D1
LCD_D0
SCK
MISO
MOSI
REELBOX_RESET
LCD_RS
LCD_RD
LEDB_BRIGHTNESS
LEDA_BRIGHTNESS
LCD_RESET
LED_RECORD
LED_INFRARED
LED_STANDBY
COL4
COL2
COL2
COL1
REELBOX_WAKEUP
ROW3
ROW2
ROW1
IR_RXD
SERIAL_OUT
SERIAL_IN
VCC5VSBL
FPP_RESET
Y1
11.0592/HC49
R13
100k
100n
C2
22p
C3
C4
LCD_CS1
LCD_WR
LCD_BRIGHTNESS
C8
22u
C12
100n
C11
22u-NL
C16
100n
Default: Display reversed
IR2
R12
2.2k
R32
1k-NL
R18
1k
VCC5V
J1
SDA
SCL
MISO
MOSI
SERIAL_IN
SERIAL_OUT
REELBOX_WAKEUP
VCC5V
REELBOX_RESET
SW1
SW2
SW3
SW4
SW5
SW6
SW7
SW8
SW9
SW10
SW11
SW12
ROW1
ROW2
ROW3
COL1
COL2
COL3
COL4
R24
R25
R31
R33
1k
PROGRAMMING SLOT
SLOT1.10
SLOT1.9
SLOT1.8
SLOT1.7
SLOT1.6
SLOT1.5
SLOT1.4
SLOT1.3
SLOT1.2
SLOT1.1
VCC5VSBL
SCK
MOSI
MISO
FPP_RESET
GND
R15
1k
R16
47R
C13
10u
IR1
TSOP1238
VCC
OUT
GND
REELBOX FRONTPANEL V3
BayCom
Georg Acher
frontpanel3
5/15/2007 21:26:44
Sheet: 1/2

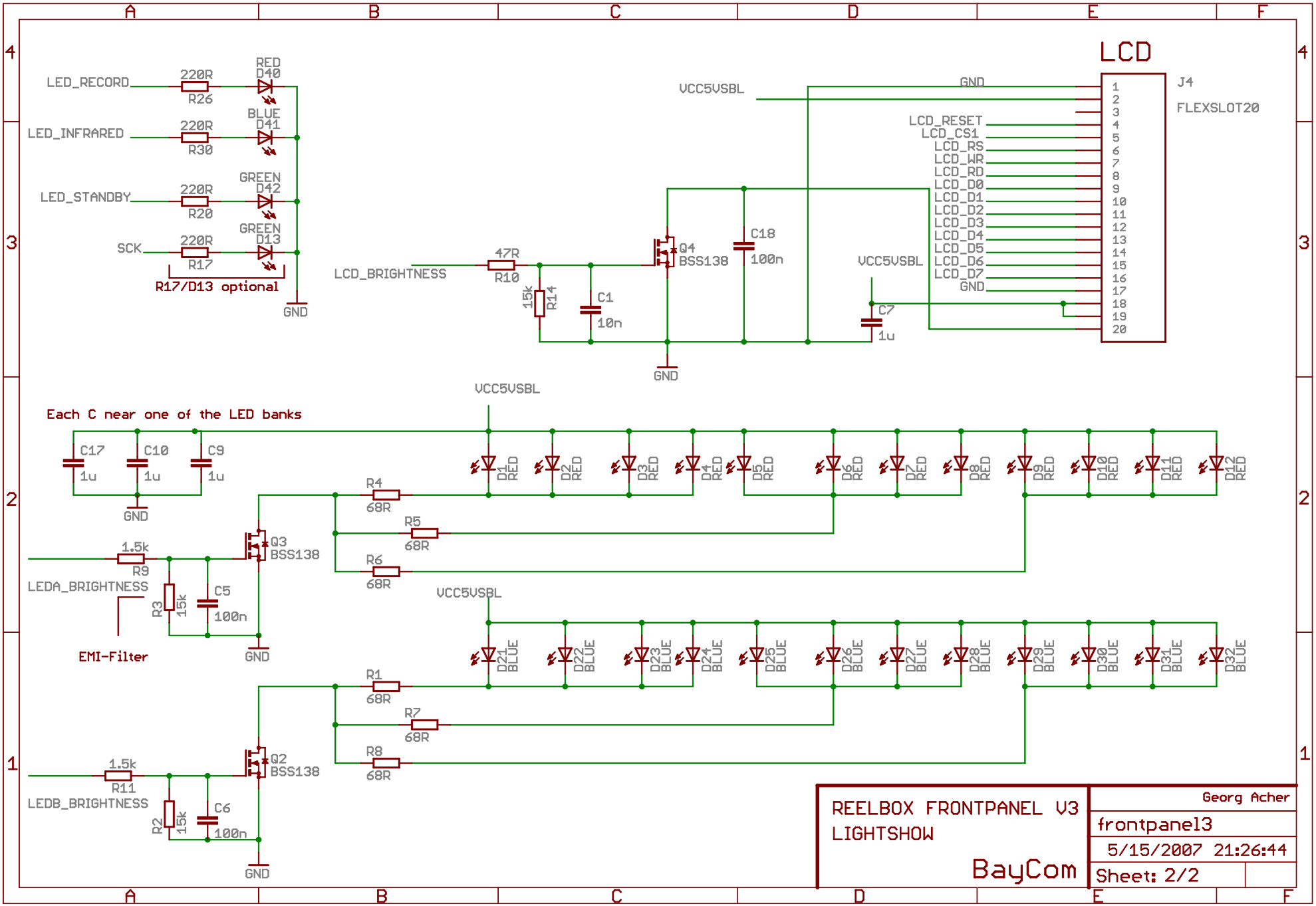
LCD
J4
FLEXSLOT20
LED_RECORD
220R
R26
RED
D40
LED_INFRARED
220R
R30
BLUE
D41
LED_STANDBY
220R
R20
GREEN
D42
SCK
220R
R17
GREEN
D13
R17/D13 optional
GND
LCD_BRIGHTNESS
47R
R10
15k
R14
C1
10n
Q4
BSS138
C18
100n
VCC5VSBL
GND
LCD_RESET
LCD_CS1
LCD_RS
LCD_WR
LCD_RD
LCD_D0
LCD_D1
LCD_D2
LCD_D3
LCD_D4
LCD_D5
LCD_D6
LCD_D7
C7
1u
Each C near one of the LED banks
C17
1u
C10
1u
C9
1u
R4
68R
R5
68R
R6
68R
D1 RED
D2 RED
D3 RED
D4 RED
D5 RED
D6 RED
D7 RED
D8 RED
D9 RED
D10 RED
D11 RED
D12 RED
1.5k
R9
LEDA_BRIGHTNESS
R3
15k
C5
100n
Q3
BSS138
EMI-Filter
R1
68R
R7
68R
R8
68R
D21 BLUE
D22 BLUE
D23 BLUE
D24 BLUE
D25 BLUE
D26 BLUE
D27 BLUE
D28 BLUE
D29 BLUE
D30 BLUE
D31 BLUE
D32 BLUE
1.5k
R11
LEDB_BRIGHTNESS
R2
15k
C6
100n
Q2
BSS138
REELBOX FRONTPANEL V3
LIGHTSHOW
BayCom
Georg Acher
frontpanel3
5/15/2007 21:26:44
Sheet: 2/2