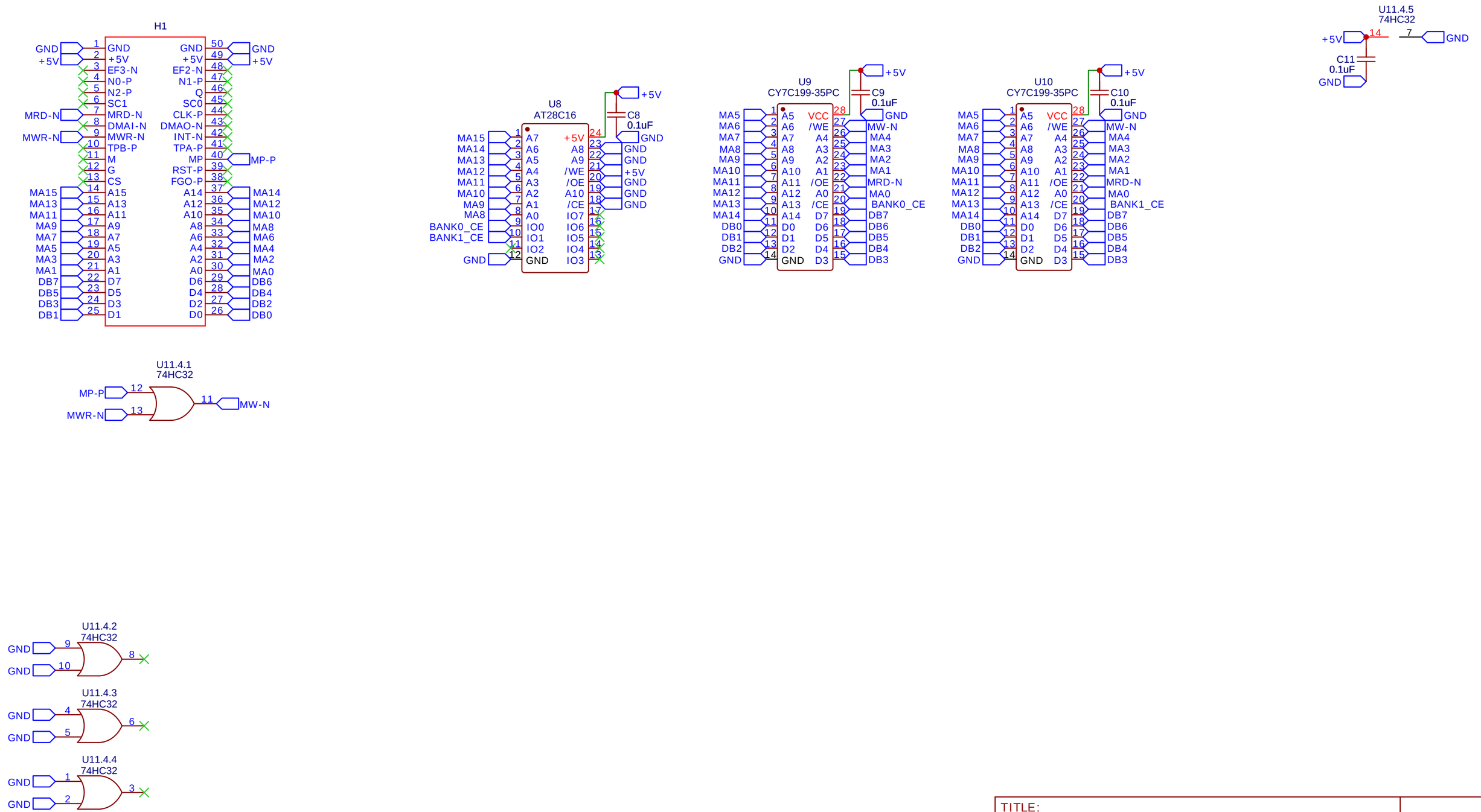

TITLE: SUPER ELF RETRO EXPANSION V1	REV: 2.0
Company: Inez Funkhouser	Sheet: 1/1
Date: 2022-02-17 Drawn By: jeff.truck	

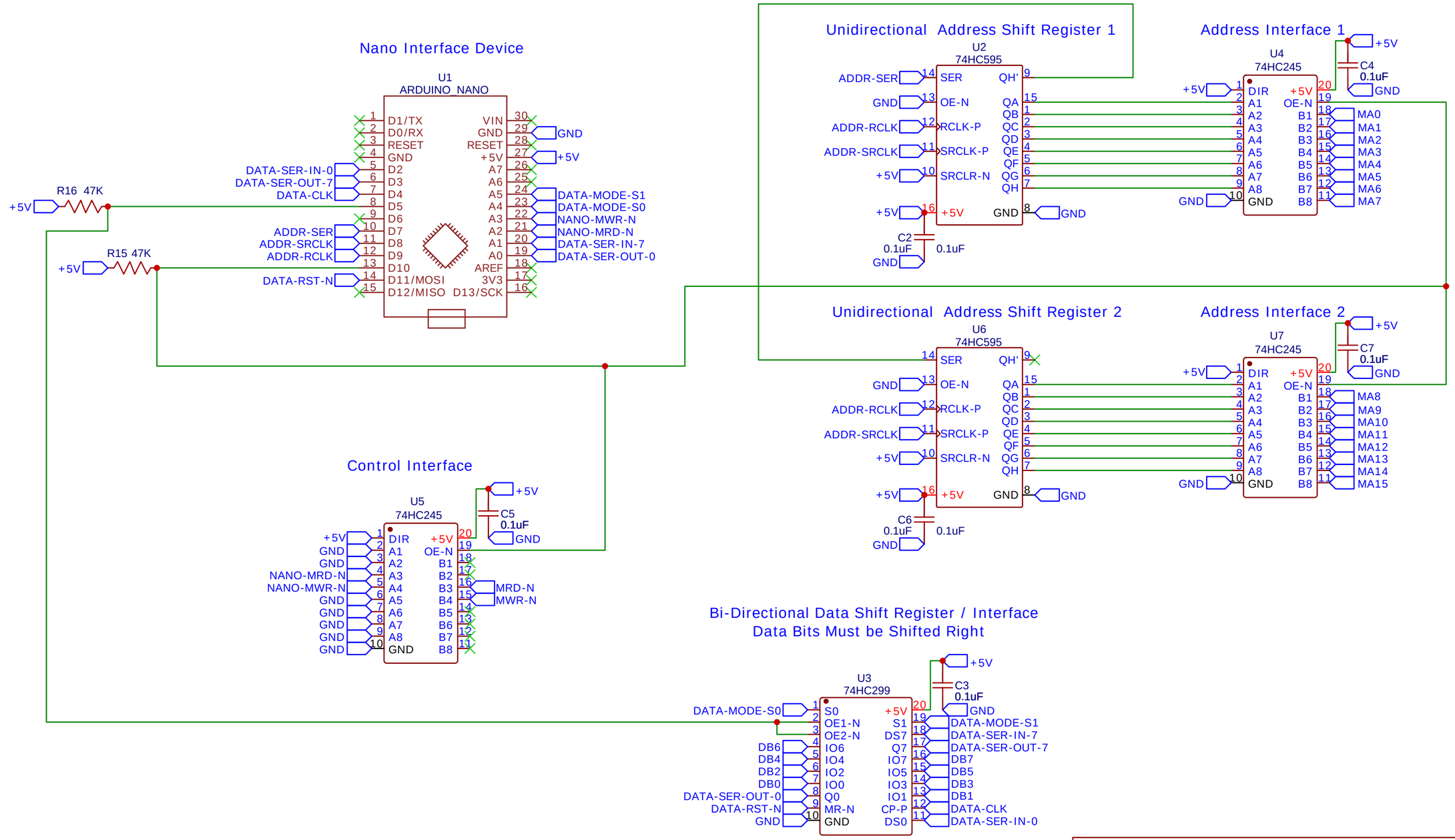

TITLE: NANO INTERFACE	REV: 2.0
EasyEDA	Company: Your Company
	Sheet: 1/1
	Date: 2022-02-17 Drawn By: jeff.truck