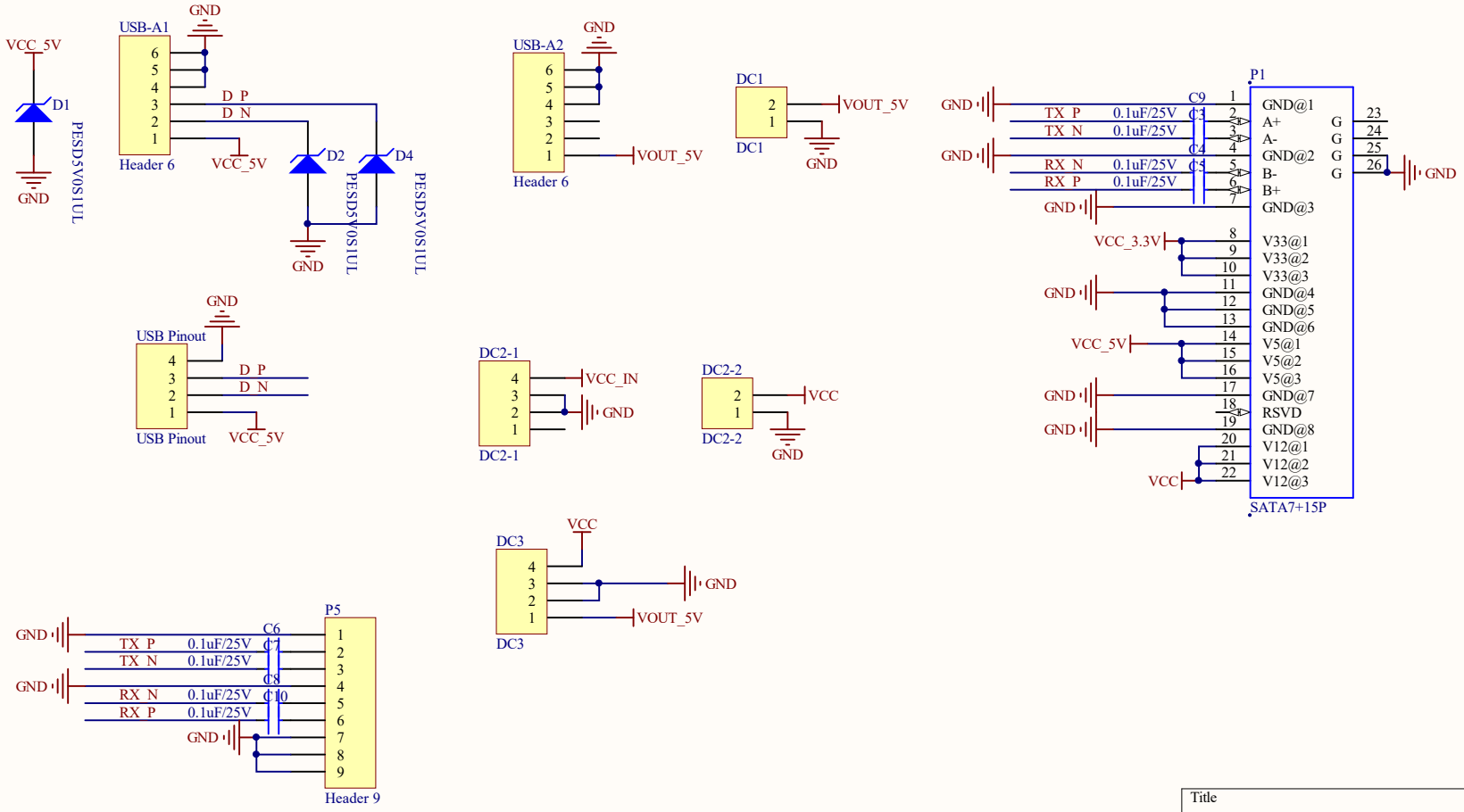

Title		
Size A4	Number	Revision
Date: 2020/10/31		Sheet of
File: F:\projects\..\CONNECTOR.SchDoc		Drawn By:

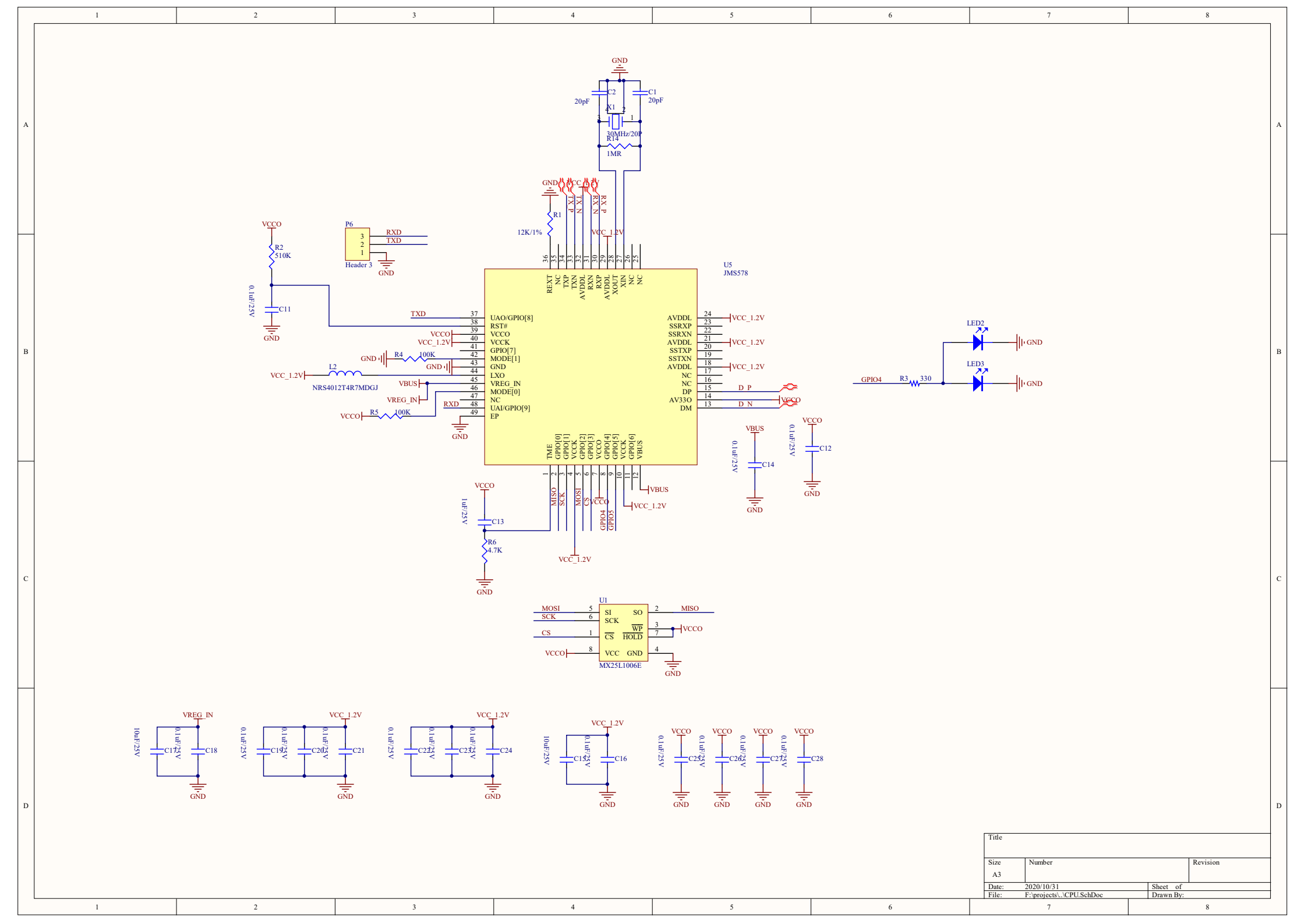

Title		
Size A3	Number	Revision
Date: 2020/10/31		Sheet of
File: F:\projects\..\CPU.SchDoc		Drawn By:

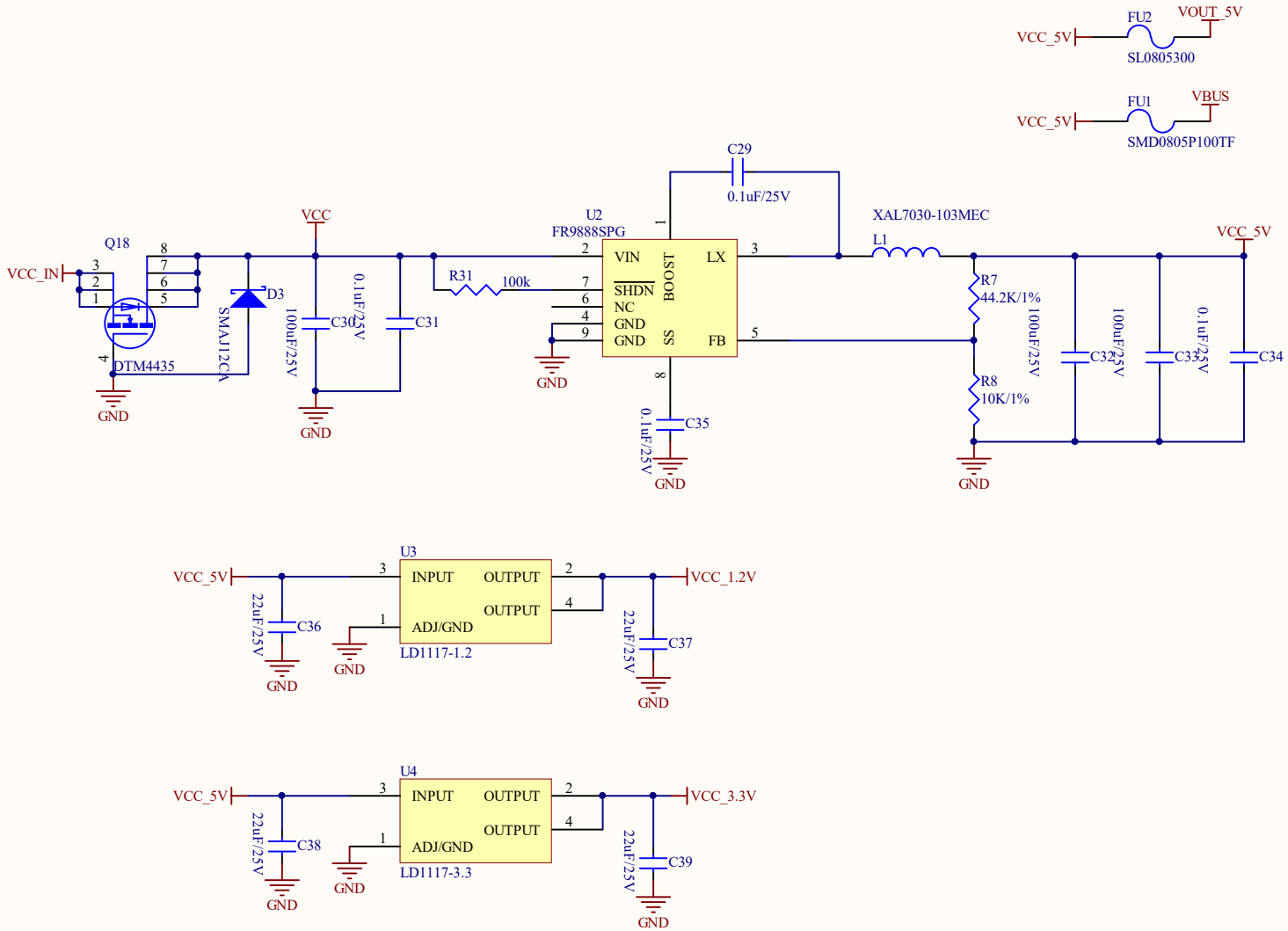

Title		
Size A4	Number	Revision
Date: 2020/10/31		Sheet of
File: F:\projects\..\power.SchDoc		Drawn By:

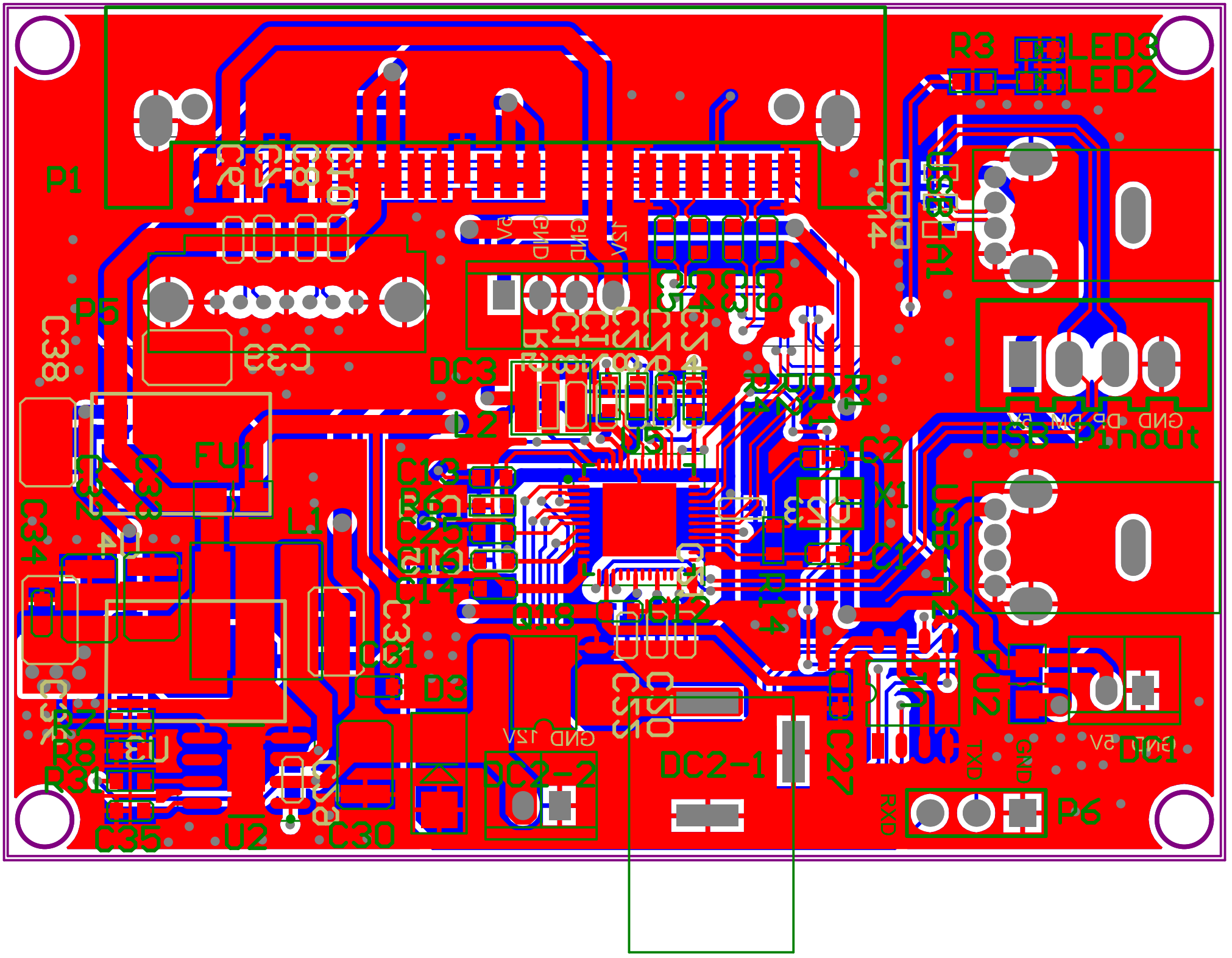

R3
LED3
LED2
P1
P5
C38
C39
DC3
FU1
L1
C34
C31
D3
R8
R3
C35
U2
C30
DC2-2
DC2-1
C27
U3
FU2
DC1
P6
GND 12V
GND 5V
TXD
RXD
GND

Comment	Description	Designator	Footprint	LibRef	Quantity
20pF	Capacitor	C1, C2	0603c	CAP	2
0.1uF/25V	CCX85-103	C3, C4, C5, C6, C7, C8, C9, C10, C11, C12, C14, C16, C18, C19, C20, C21, C22, C23, C24, C25, C26, C27, C28, C29, C31, C34, C35	0603C	0.01UF	27
1uF/25V	CCX85-103	C13	0603C	0.01UF	1
10uF/25V	CCX85-103	C15, C17	0603C	0.01UF	2
100uF/25V	CCX85-103	C30, C32, C33	1210C	0.01UF	3
22uF/25V	CCX85-103	C36, C37, C38, C39	1210C	0.01UF	4
PESD5V0S1UL	Zener Diode	D1, D2, D4	0402R	D Zener	3
SMAJ12CA	Schottky Diode	D3	SMA	DIODE S	1
DC1	Header, 2-Pin	DC1	2X2MMZ	Header 2	1
DC2-1	Header, 4-Pin	DC2-1	DC005	Header 4	1
DC2-2	Header, 2-Pin	DC2-2	2X2MMZ	Header 2	1
DC3	Header, 4-Pin	DC3	2X4MMZ	Header 4	1
SMD0805P100TF	Fuse	FU1	F0805	FUSE2	1
SL0805300	Fuse	FU2	F0805	FUSE2	1
XAL7030-103MEC		L1	XAL7030	INDUCTOR	1
NRS4012T4R7MDGJ		L2	NRS4012T4R7MDGJ	INDUCTOR	1
		LED2, LED3	0603LED	LED	2
SATA7+15P	Conn SATA PL 15Power/7Signal POS 1.27mm Solder RA Thru-Hole 22 Terminal 1 Port	P1	SATA 7+15PML	SATA7+15P	1
Header 9	Header, 9-Pin	P5	SATA 7P	Header 9	1
Header 3	Header, 3-Pin	P6	HDR1X3	Header 3	1
DTM4435	Si4004DY	Q18	SO-8	Si4004DY	1
12K/1%	Resistor	R1	0603R	Res3	1
510K	Resistor	R2	0603R	Res3	1
330	R	R3	0603R	R	1
100K	Resistor	R4, R5, R31	0603R	Res3	3
4.7K	Resistor	R6	0603R	Res3	1
44.2K/1%	Resistor	R7	0603R	Res3	1
10K/1%	Resistor	R8	0603R	Res3	1
1MR	Resistor	R14	0603R	Res3	1
MX25L1006E		U1	SO-8	M25P40-VMN6	1
FR9888SPG		U2	SOP120P600-8N	FR9888SPG	1
LD1117-1.2		U3	sot223	LD1117-1.2	1
LD1117-3.3		U4	sot223	LD1117-1.2	1
JMS578		U5	QFN400P600-8N	JMS578	1
USB Pinout	Header, 4-Pin	USB Pinout	sip-4l	Header 4	1
Header 6	Header, 6-Pin	USB-A1, USB-A2	USB-A-C	Header 6	2
30MHz/20P		X1	XTAL4TN_3225	CRYSTAL_2	1