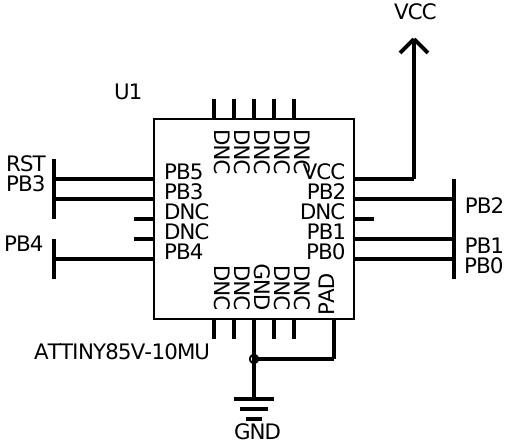

Charliepex LED matrix

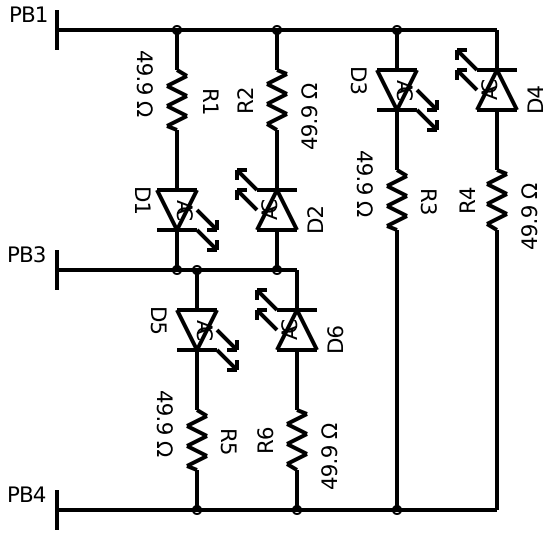

Power Supply

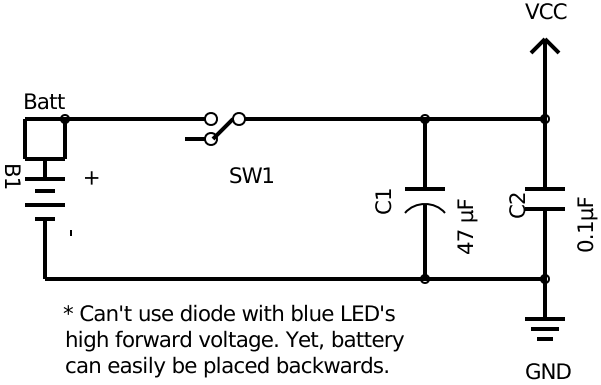

* Can't use diode with blue LED's high forward voltage. Yet, battery can easily be placed backwards.

Programming Port
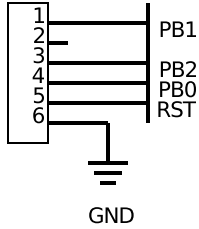
TC2030-IDC-NL-FP