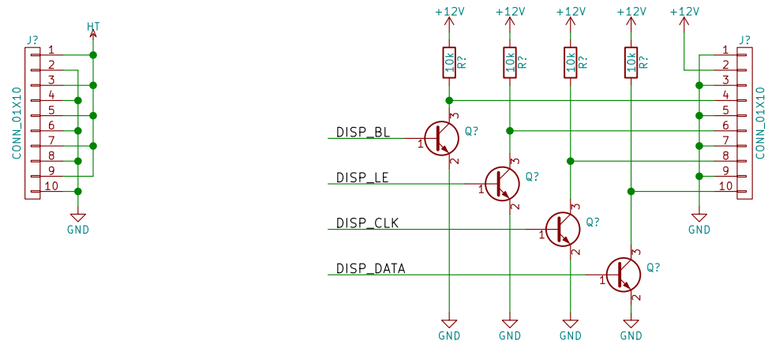

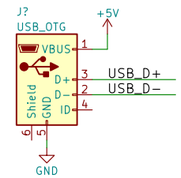

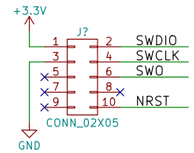

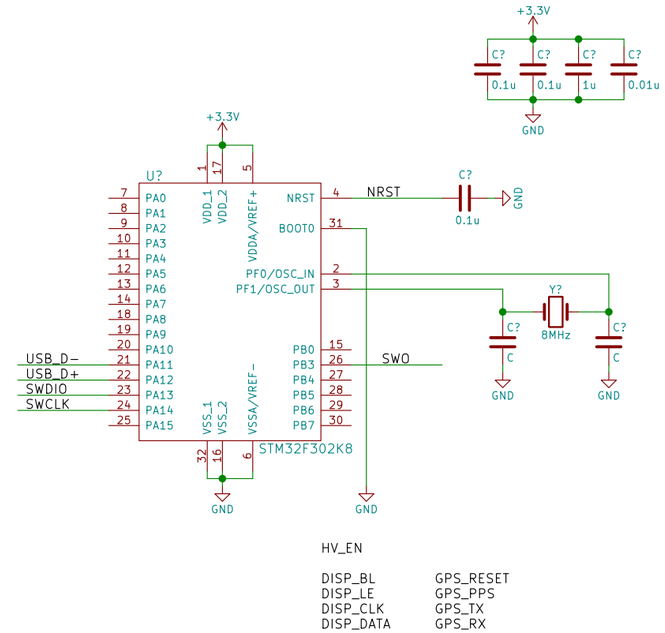

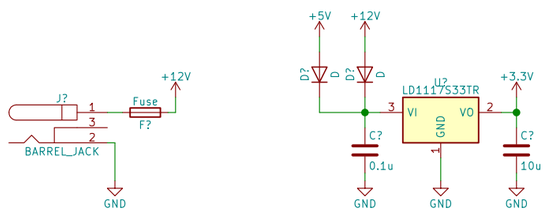

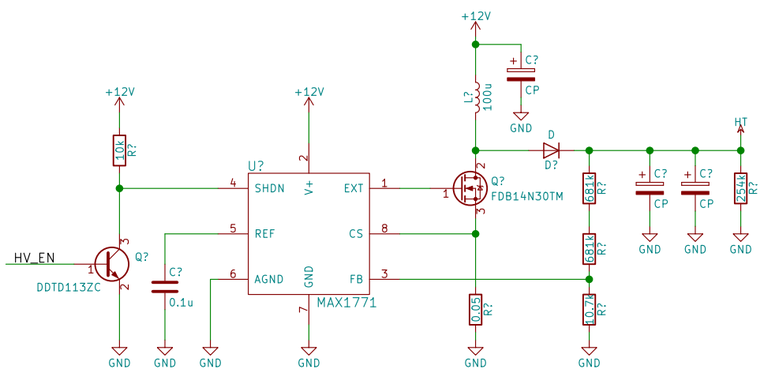

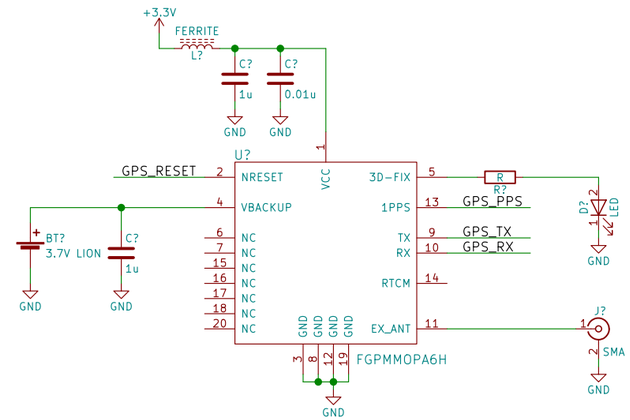

Sheet: /
File: main-board.sch

Title:

Size: B	Date:	Rev:
KiCad E.D.A. kicad 4.0.6		Id: 1/1