ISO-NE Day-Ahead Demand Forecasting

A Multi-Modal CNN-Transformer with Geographic Attention Diagnosis

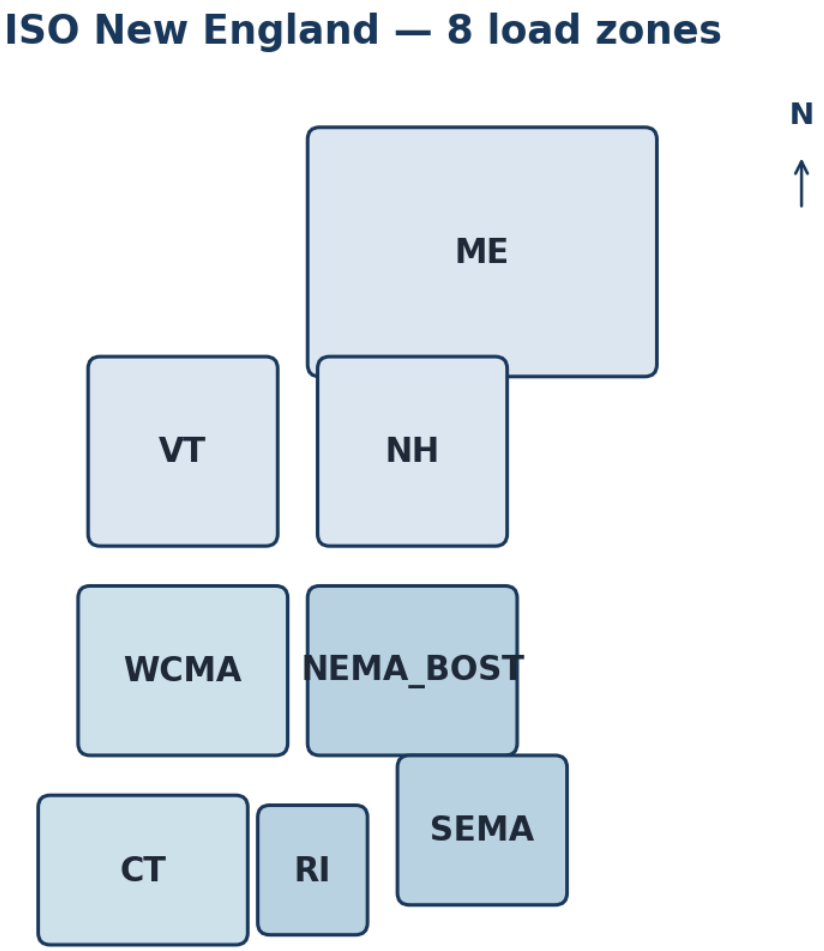

Headline

5.24 % test MAPE

1.75 M parameters

8 ISO-NE load zones · **24 h** horizon

Pang (Jeff) Liu — `pliu07`

Tufts CS-137 · April 30, 2026

Task & Metric

$$\hat{Y}_{t+1:t+24} = f_\theta\big(X_{t-S:t+24},\ Y_{t-S:t},\ C_{t-S:t+24}\big)$$

$$\mathrm{MAPE} = \frac{100}{24\,n_z}\sum_{h=1}^{24}\sum_{z=1}^{n_z}\frac{\left|\hat{Y}_{t+h,z} - Y_{t+h,z}\right|}{Y_{t+h,z}}$$

Stream	Tensor	Source
Weather X_t	$\mathbb{R}^{7\times450\times449}$	HRRR-style reanalysis
Demand Y_t	$\mathbb{R}^{8}$	ISO-NE zone reports
Calendar C_t	$\mathbb{R}^{44}$	one-hot hour/dow/month + holiday

Test-set caveat: all numbers self-eval on last 2 days of 2022; TA grades on 2024.

Part 1 — Baseline Architecture (40 pts)

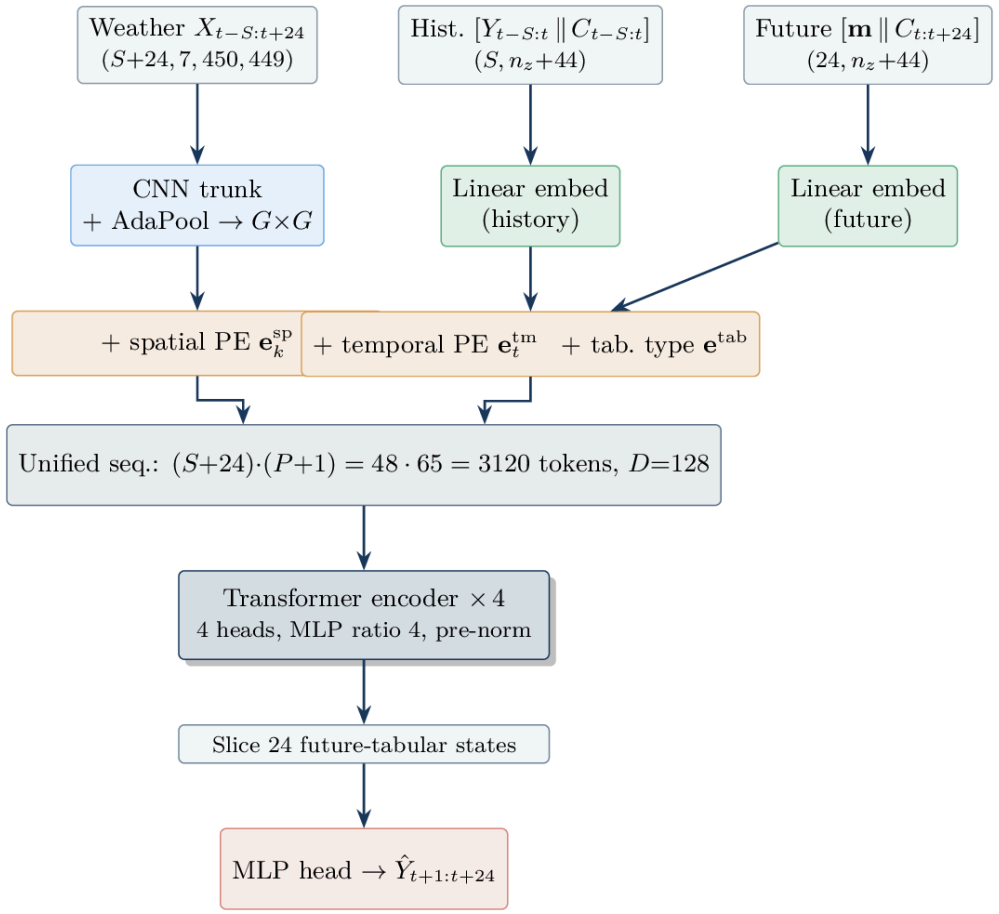

Token assembly

$$\mathrm{seq}_{t,k} = \begin{cases} \mathrm{CNN}(X_t)_k + \mathbf{e}_k^{\mathrm{sp}} + \mathbf{e}_t^{\mathrm{tm}} & k < P \\ W_{\mathrm{tab}}[Y_t \| C_t] + \mathbf{e}^{\mathrm{tab}} + \mathbf{e}_t^{\mathrm{tm}} & k = P \end{cases}$$

`P=64` , `S+24=48` ⇒ **3120 tokens,** $D = 128$

1.75 M params · 4 enc layers × 4 heads · 14 epochs · A100

Part 1 — Per-zone Result

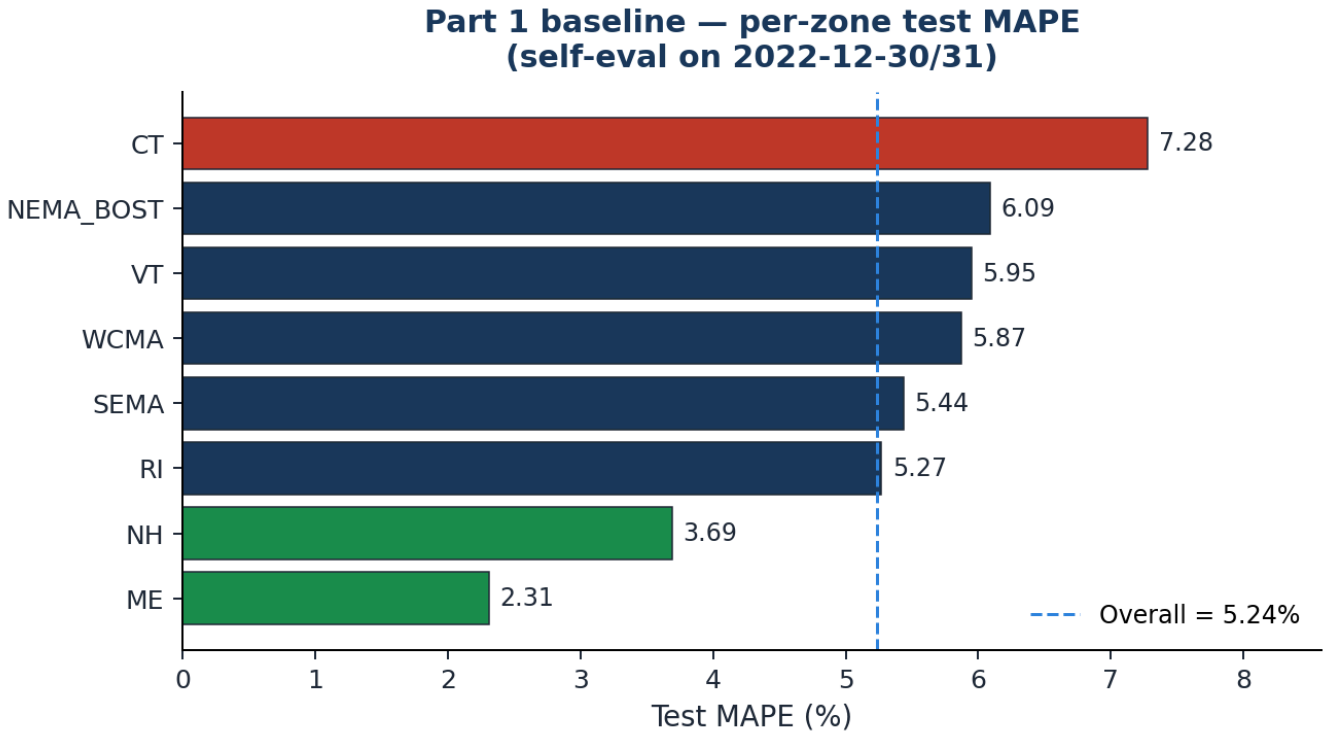

Best ME 2.31 % · NH 3.69 % | **Worst** CT 7.28 % · NEMA_BOST 6.09 % | **Overall**

5.24 %

Part 2 — Encoder-Decoder + LR-Reset Bug (30 pts)

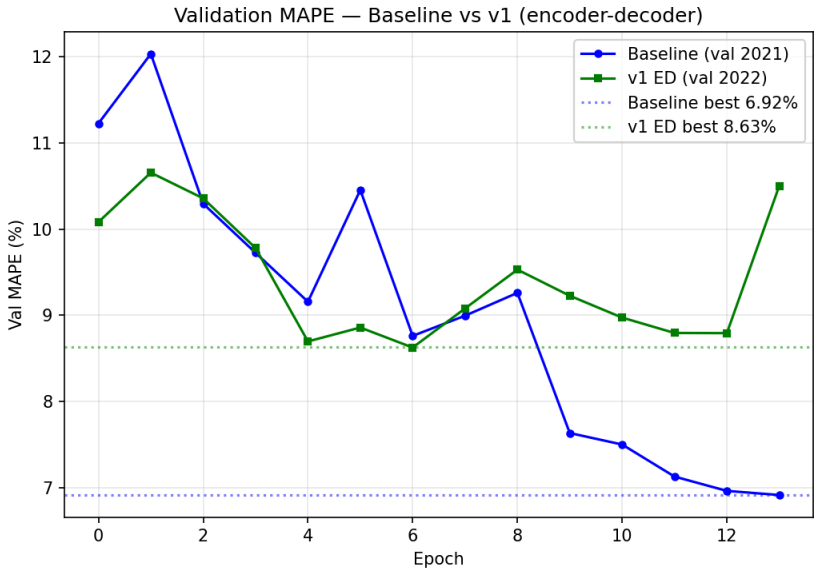

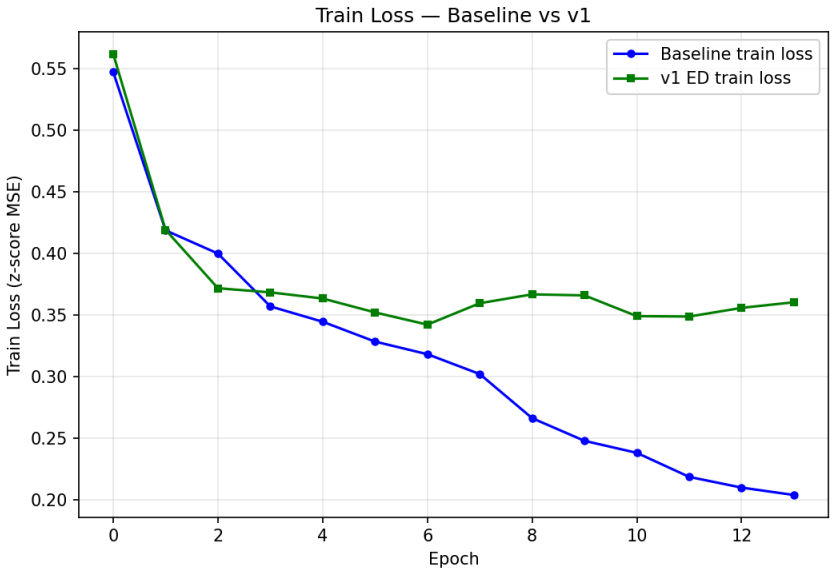

Result. v1 = **6.82 %**

(baseline 5.24 % · **+1.58 pp**); only VT wins.

Diagnosed cause.

⚠️

`train.py` saves model+optimizer but **not** `scheduler.state_dict()` → chained `--resume` resets cosine LR (7.5e-4 → 1e-3 at epoch 7).

Part 3 — Attention-Map Diagnosis (30 pts, Track A)

$$A^{(\ell)}_{\text{slice}} = A^{(\ell)}\Big[\,:,\ :,\ \underbrace{\mathcal{Q}_{\text{fut}}}_{24\text{ future tab.}},\ \underbrace{\mathcal{K}_{\text{hist}}}_{24\cdot 64\text{ hist. spatial}}\,\Big] \in \mathbb{R}^{B\times h\times 24\times 1536}$$

Reshape 64 cells → (8×8) row-major (matches `WeatherCNN.flatten(2)`); `imshow(origin='upper')` = north up.

Sanity check (encoded as runtime `assert`):

$$\sum_{r=0}^{7}\sum_{c=4}^{7} A^{\texttt{NEMA_BOST}}_{rc} > \sum_{r=0}^{7}\sum_{c=0}^{3} A^{\texttt{NEMA_BOST}}_{rc}$$

Three questions the figures answer: **which regions drive demand · does the model track weather · do zones differ?**

Code complete + verified locally; figures generated by `scripts/attention_maps.slurm` *on HPC.*

Findings & Thanks

5.24 %

Part 1 baseline test MAPE

+1.58 pp

v1 gap — diagnosed (LR-reset bug)

1.75 M

parameters · 14 epochs · 22 h on A100

2 days

self-eval slice; TA grades on 2024

Solo submission — Pang (Jeff) Liu (pliu07) is the sole author of every component.

Code: github.com/jeffliulab/real-time-power-predict · Thanks to CS-137 staff and the Tufts HPC team.