Personal Notes on

# ECE484: Quantum Algorithm

Jeffrey Ming Han Li

jeffreyli2288@Outlook.com

**Abstract**

This note is documented for ECE484 Quantum Algorithm and Quantum Software

## Contents

**1 Classical Notes** **2**

**2 Quantum Notes** **3**

2.1 Quantum State . . . 3

2.1.1 Global & relative phases . . . 3

2.1.2 Bloch's Sphere . . . 3

2.1.3 Application of Quantum Qubits . . . 4

2.2 QKD(Quantum Key Distribution) . . . 5

2.2.1 Classical(One Time pad) . . . 5

2.2.2 BB84 . . . 5

2.2.3 Super Dense Coding . . . 6

2.3 Multi-Qubit Systems . . . 7

2.3.1 Measurement . . . 7

2.3.2 Multi-qubit Gates . . . 8

2.4 Teleportation . . . 9

2.5 Deutsch's Algorithm . . . 9

# 1 Classical Notes

Here are some interesting facts to note

- **Easy Algorithm**: Polynomial time algorithm complexity so called tractable algorithm.
- **Hard Algorithm**: Exponential time algorithm also not tractable.
- Classical computation always maps a basis state to exactly one basis state, there is no fractions no mixtures.
- **Reversible Gate**: Linear gate that allows backtracing from the output. And Gate is irreversible because it is not a one-to-one mapping. *QUANTUM gates must be reversible i.e. For AND operation in quantum we have toffoli gate.*
- **Making Gates Reversible**: Pass the output of the quantum gate through an Xor gate, we will produce an reversible gate for 2 input circuit. For 3 input circuit it follows the same logic. For multiple outputs(i.e. 2 outputs),adding two XOR gates like before gives the same result.

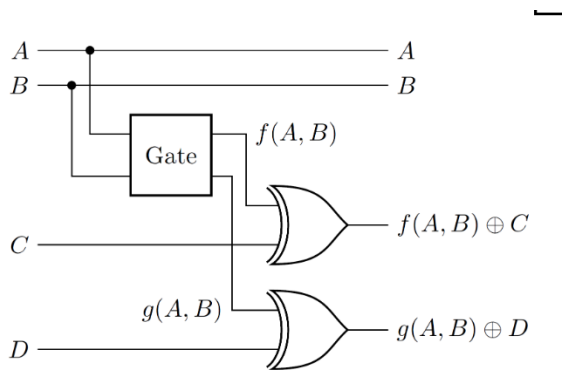


Figure 1: Example for multiple output circuits and 2 input circuits.

- **Why Reversibility**:
  1. Evolution of Quantum State(applying unitary matrices) is linear.
  2. Unitary matrices are invertible(same as the first reason)
  3. Quantum gates are rotations not projections(linear, still the same as the first reason)

# 2 Quantum Notes

## 2.1 Quantum State

### 2.1.1 Global & relative phases

- **Relative Phase:** For a state of
$$\frac{1}{\sqrt{2}}(|0\rangle + |1\rangle) \tag{1}$$
the sign before $|1\rangle$ is relative phase, and this impact the amplitude of the state.

- **Global Phase:** This is the phase applied to both states at the same time. The key is whether two states that is applied a global phase differ from a computational perspective. Yet we notice that when we apply an arbitrary quantum gate
$$\begin{cases} U|1\rangle = U|1\rangle \\ U(-|1\rangle) = -(U|1\rangle) \end{cases} \tag{2}$$
which moves the global phase along without much effect for later computation. It also has no effect on measurements of the magnitude of the state.

### 2.1.2 Bloch's Sphere

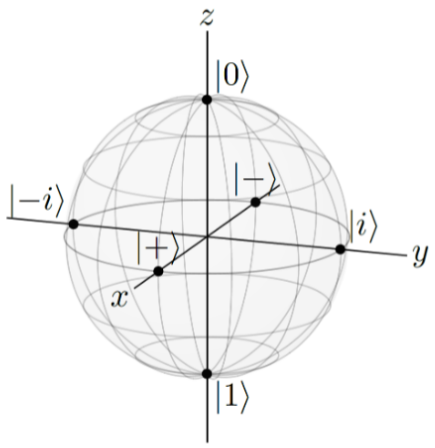


Figure 2: Image of Bloch Sphere, where each axis corresponds to its unique state

- **Representation:** In fact, any state on Bloch Sphere, can be, in spherical coordinates, represented by
$$|\psi\rangle = \cos(\theta/2)|0\rangle + \sin(\theta/2)e^{i\phi}|1\rangle \tag{3}$$
Note that Bloch sphere is also the reason to name $|+\rangle, |-\rangle$ as the **X-Basis**, $|-i\rangle, |i\rangle$ as **Y-Basis**, and $|0\rangle, |1\rangle$ as **Z-Basis**

### 2.1.3 Application of Quantum Qubits

## 2.2 QKD(Quantum Key Distribution)

### 2.2.1 Classical(One Time pad)

- consider a message
$$m = 001110110101 \tag{4}$$
of length n, and they use a previously agreed secret key k that encrypt the message by $c = m \oplus k$.
- Bob used the shared key k and apply xor again to know the message.
- In an insecure channel; Eve may observe the message c.
- The question is how Bob and Alice obtain shared key k, which can be created using QKD.

### 2.2.2 BB84

This QKD protocol consists of a quantum channel and a classical channel. Neither channel needs to be secure, and the classical channel must be authenticated(that Alice and Bob knows they are talking with each other).

- For each random bit, Alice prepares a qubit $q_i$
- With prob 0.5, she applies H gate to $q_i$ or she does nothing.
- Alice records whether H was applied to each qubit, and send, in order, all $q_i$ qubits to Bob over the quantum channel.
- Bob receives the qutbi and randomly decide to apply H or not for every qubit and record the choise.
- Measure qubit in computational basis and record outcome.
- Bob and Alice exchange the order of H application and Alice confirms if here choice matched. If decision match then keep that qubit, and if it differ discard the qubit. What is left becomes the key.

### 2.2.3 Super Dense Coding

xargs,ifthen,xstring,xparse,etoolbox,mathtools,pgfmath environ

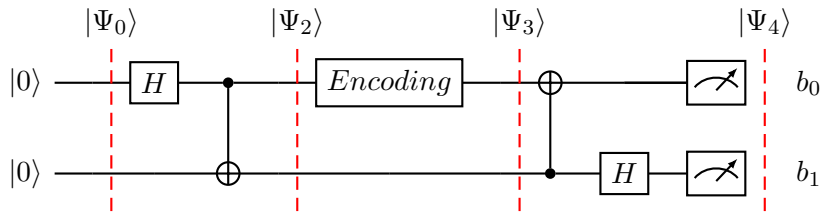


- Send two bits of information via a single qubit
- Require a pair of entangle qubits between sender and receiver.
- The circuit begins with a bell state

$$\left|\Phi^+\right\rangle = \frac{1}{\sqrt{2}}(|0\rangle_{Alice} \otimes |0\rangle_{Bob} + |1\rangle_{Alice} \otimes |1\rangle_{Bob}) \tag{5}$$

- The **encoding** rule is that for sender

$$00 \rightarrow \text{no operation} \tag{6}$$
$$01 \rightarrow \text{Applies Z to her qubit} \tag{7}$$
$$10 \rightarrow \text{Applies X to her qubit} \tag{8}$$
$$11 \rightarrow \text{Applies Z then X to her qubit} \tag{9}$$

- The **Decoding** part is that, after Alice sends her qubit to Bob, first apply a CNOT gate

$$CNOT_{2\rightarrow 1}\,|xy\rangle = |x \oplus y, y\rangle \tag{10}$$

each of the possible encoded message has a corresponding state after a CNOT gate

$$\left|\Phi^+\right\rangle \rightarrow^{CNOT} |0\rangle \otimes |+\rangle \tag{11}$$
$$|\Phi^-\rangle \rightarrow^{CNOT} |0\rangle \otimes |-\rangle \tag{12}$$
$$\left|\psi^+\right\rangle \rightarrow^{CNOT} |1\rangle \otimes |+\rangle \tag{13}$$
$$|\psi^-\rangle \rightarrow^{CNOT} |1\rangle \otimes |-\rangle \tag{14}$$

applying an H gate removes the + - state on Bob's qubit, which we may have a concrete result of

$$|00\rangle \rightarrow 00 \tag{15}$$
$$|01\rangle \rightarrow 01 \tag{16}$$
$$|10\rangle \rightarrow 10 \tag{17}$$
$$|11\rangle \rightarrow 11 \tag{18}$$
$$\tag{19}$$

## 2.3 Multi-Qubit Systems

- **State Convention:** for a system of N qubits, we may represent the state in a more concise way

$$|010\rangle = \begin{pmatrix} 0 \\ 0 \\ 1 \\ 0 \\ 0 \\ 0 \\ 0 \\ 0 \end{pmatrix} = |2\rangle \,, \tag{20}$$

  for N qubtis there are $2^N$ possible states, and therefore,

$$|0\rangle \,, |1\rangle \,, ..., \left|2^N - 1\right\rangle \tag{21}$$

  are the decimal notation of the states. Therefore, state $|j\rangle$ is a column vector of size $2^N$ whose components are all zeros but a single 1 in $j+1$-th position.

- **General N-Qubit state:** for a general quantum state of n-qubit, we may write that

$$|\psi\rangle = \sum_{j=0}^{2^N-1} \alpha_j \, |j\rangle \,, \quad \sum_{j=0}^{2^N-1} |\alpha_j|^2 = 1, \quad \alpha_i \in \mathbb{C}^{2^N} \tag{22}$$

- **Balanced Superposition of n-Qubits:** A balanced state can be written as

$$\frac{1}{\sqrt{2^N}} \sum_{j=0}^{2^N-1} |j\rangle = |+\rangle^{\otimes n} = \frac{1}{\sqrt{2^N}} \sum_{x \in \{0,1\}^N} |x\rangle \tag{23}$$

- **n-Qubit Product States** an n-qubti state is a product state if there exist two states $|\psi_1\rangle \,, |\psi_2\rangle$ of $n_1, n_2$ qubits such that the overall state can be expressed as the product of the two states

$$\frac{1}{\sqrt{2}}(|000\rangle + |010\rangle) = (\frac{1}{\sqrt{2}}(|00\rangle + |01\rangle)) \, |0\rangle \tag{24}$$

- **W-State:** W state is expressed by

$$|W\rangle = \frac{1}{\sqrt{3}}(|001\rangle + |010\rangle + |100\rangle) \tag{25}$$

  and a n-Qubit W state gives

$$|W_n\rangle = \frac{1}{\sqrt{n}} \sum_{k=1}^{n} |0...01_k 0...0\rangle \tag{26}$$

  which is a entangled quantum state

- **GHZ State** a GHZ State is expressed as such

$$|GHZ_n\rangle = \frac{1}{\sqrt{2}}(|0\rangle^{\otimes n} + |1\rangle^{\otimes n}) \tag{27}$$

### 2.3.1 Measurement

For a N-qubit system,

- **Measure many qubits:** if we measure all qubits of the system at once, for a qubit state in (22), the result would be obtaining result k with probability $|\alpha_k|^2$ (recall that each of these states are in decimal notation so the coefficient before them tells one of the possible permutation of the state.)

- **After Measurement:** the state collapses to $|k\rangle$
- **Measuring a Single Qubit** lets say n = 4, and we measuring the qubit in position $l(l = 2)$ suppose we obtain 0, then the state collaposes to states that has 0 at l = 2.

$$|\psi_{post}\rangle = \frac{1}{\sqrt{p_0}} \sum_{j \in L_0} \alpha_j |j\rangle, \quad p_0 = \sum_{j \in L_0} |\alpha_j|^2 \tag{28}$$

note that $L_0$ represents the set of all basis states whose l-th entry is 0, and the $\alpha_{10}$ before measurement and after measurement is the same, but the $\alpha_{10}$ after measurement has an extra $\frac{1}{\sqrt{p_0}}$ factor.

### 2.3.2 Multi-qubit Gates

- n-qubit gates are $2^n \times 2^n$ unitary matrices
- **Expression for multiple qubits gates:**

$$U_1 \in \mathcal{U}(2^{n_1}),\ U_2 \in \mathcal{U}(2^{n_2}),\ |\psi_1\rangle \in \mathbb{C}^{2^{n_1}},\ |\psi_2\rangle \in \mathbb{C}^{2^{n_2}} \tag{29}$$

$$\implies (U_1 \otimes U_2)(|\psi_1\rangle \otimes |\psi_2\rangle) = (U_1 |\psi_1\rangle) \otimes (U_2 |\psi_2\rangle) \tag{30}$$

- **Toffoli Gate(CCNOT)** toffoli gates is acting a not on the target qubit after both control qubits are 1's. It is a classically universal, reversible, and unitary gates, given by

$$\begin{pmatrix} 1 & 0 & 0 & 0 & 0 & 0 & 0 & 0 \\ 0 & 1 & 0 & 0 & 0 & 0 & 0 & 0 \\ 0 & 0 & 1 & 0 & 0 & 0 & 0 & 0 \\ 0 & 0 & 0 & 1 & 0 & 0 & 0 & 0 \\ 0 & 0 & 0 & 0 & 1 & 0 & 0 & 0 \\ 0 & 0 & 0 & 0 & 0 & 1 & 0 & 0 \\ 0 & 0 & 0 & 0 & 0 & 0 & 0 & 1 \\ 0 & 0 & 0 & 0 & 0 & 0 & 1 & 0 \end{pmatrix} \tag{31}$$

for a three qubit toffoli gates, but technically it can extend to infinite control qubit.

- **Universality:** $\{T, H, CNOT\}$ realizes any quantum gate on any number of qubits and can **approximate any gate arbitrarily well**(not all gates are approximated). Given any quantum gate U on n-qubits and any desired error bound $\epsilon$, it is possible to create a circuit that only uses T,H, and CNOT gates and implements a gate $\overline{U}$ such that the distance between the states $U|\psi\rangle$ and $\overline{U}|\psi\rangle$ is at most $\epsilon$. This distance is measured by

$$U|\psi\rangle = \sum_{j=0}^{2^n-1} \alpha_j |j\rangle, \overline{U}|\psi\rangle = \sum_{j=0}^{2^n-1} \beta_j |j\rangle \tag{32}$$

and the euclidean distance is simply

$$||U|\psi\rangle - \overline{U}|\psi\rangle|| = \sqrt{\sum_{j=0}^{2^n-1} |\alpha_j - \beta_j|^2} \tag{33}$$

there are gate set that are **universally exact**(no approximation needed), such as all one-qubit gates + CNOT. However the yrequires an nonfinite gate set since it is physically impossible to perform a continuous operation.

## 2.4 Teleportation

Alice has a qubit in a certain state $|\psi\rangle$, how does she teleports this qubit to Bob such that Bob end up with $|\psi\rangle$

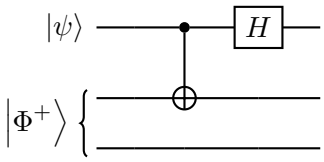


- **Initial States:**

$$|\psi\rangle \otimes \frac{1}{\sqrt{2}}(|00\rangle + |11\rangle) \tag{34}$$

where the first and 2nd qubit are held by Alice, Bob only has the third qubit. The combined state is then

$$|\psi_1\rangle = \frac{1}{\sqrt{2}}(\alpha\,|000\rangle + \alpha\,|011\rangle + \beta\,|100\rangle + \beta\,|111\rangle) \tag{35}$$

- **After CNOT:**

$$|\psi_2\rangle = \alpha\,|0\rangle \otimes \frac{1}{\sqrt{2}}(|00\rangle + |11\rangle) + \beta\,|1\rangle \otimes \frac{1}{\sqrt{2}}(|10\rangle + |01\rangle) \tag{36}$$

- **After H** we may find the state to be

$$|\psi_3\rangle = \frac{1}{2}(\alpha(|000\rangle + |100\rangle + |011\rangle + |111\rangle) + \beta(|010\rangle - |110\rangle + |001\rangle - |101\rangle)) \tag{37}$$

- **Alice Measures the 2 qubits she has:** If Alice Measures
  1. $|00\rangle$: Then Bob has the qubit to be in $|\psi\rangle$ directly, no operation is needed.
  2. $|01\rangle$: Then bob needs to apply an X gate on his qubit to obtain $|\psi\rangle$
  3. $|10\rangle$: Then bob needs to apply a Z to obtain $|\psi\rangle$
  4. $|11\rangle$ : then bob applies X then Z to obtain $|\psi\rangle$

  However, Alice needs to email bob the measurement result, and the measurement ruins her qubit so the no cloning theorem still exists

## 2.5 Deutsch's Algorithm