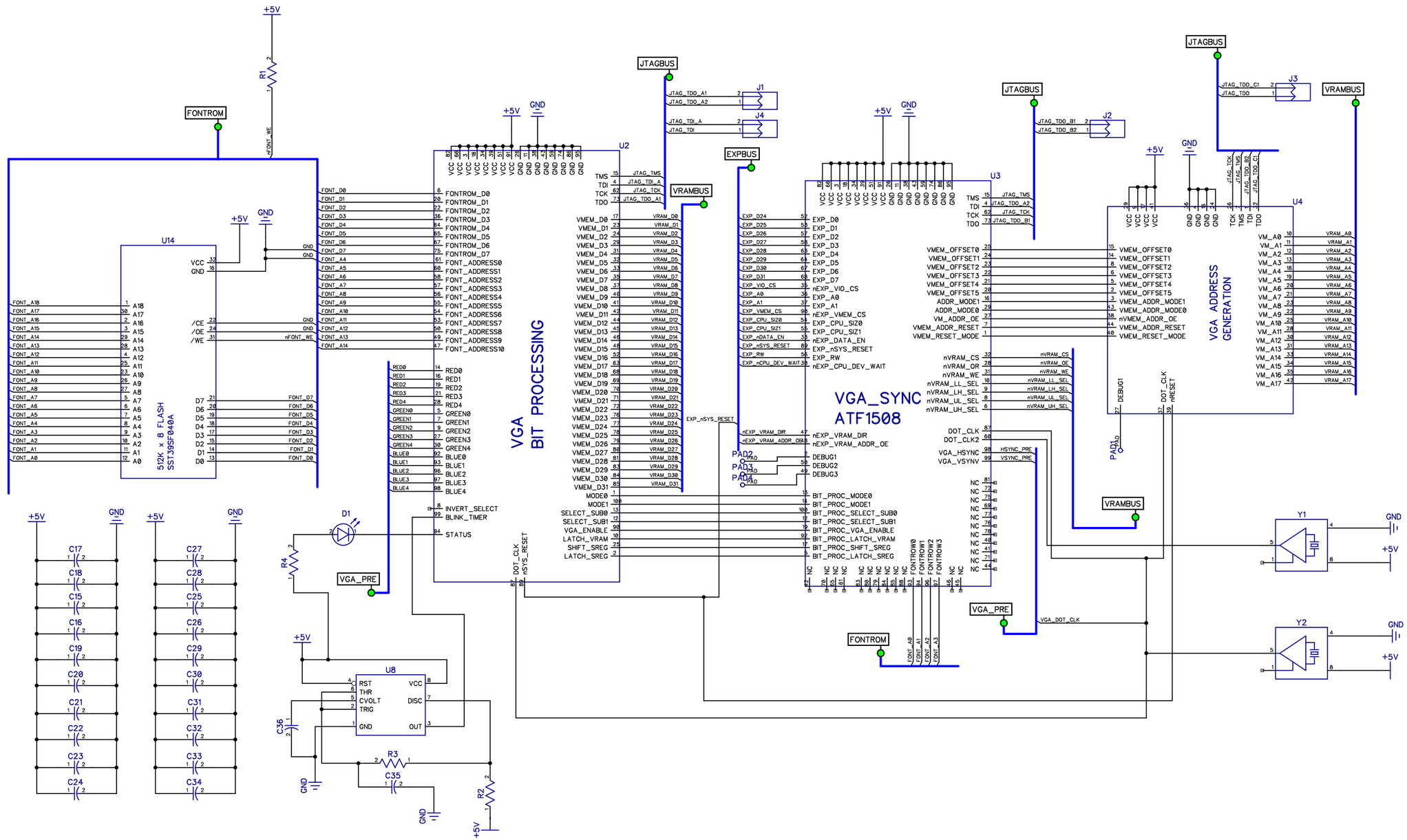
512K x 8 FLASH
SST39SF040A
U14
FONTROM
U2
VGA BIT PROCESSING
JTAGBUS
J1
J4
VRAMBUS
EXPBUS
U3
J2
J3
U4
VGA ADDRESS GENERATION
VGA_SYNC
ATF1508
Y1
Y2
U8
D1
R1
R2
R3
R4
C17
C18
C15
C16
C19
C20
C21
C22
C23
C24
C27
C28
C25
C26
C29
C30
C31
C32
C33
C34
C35
C36
+5V
GND
VGA_PRE
FONTROM
VRAMBUS
VGA_DOT_CLK

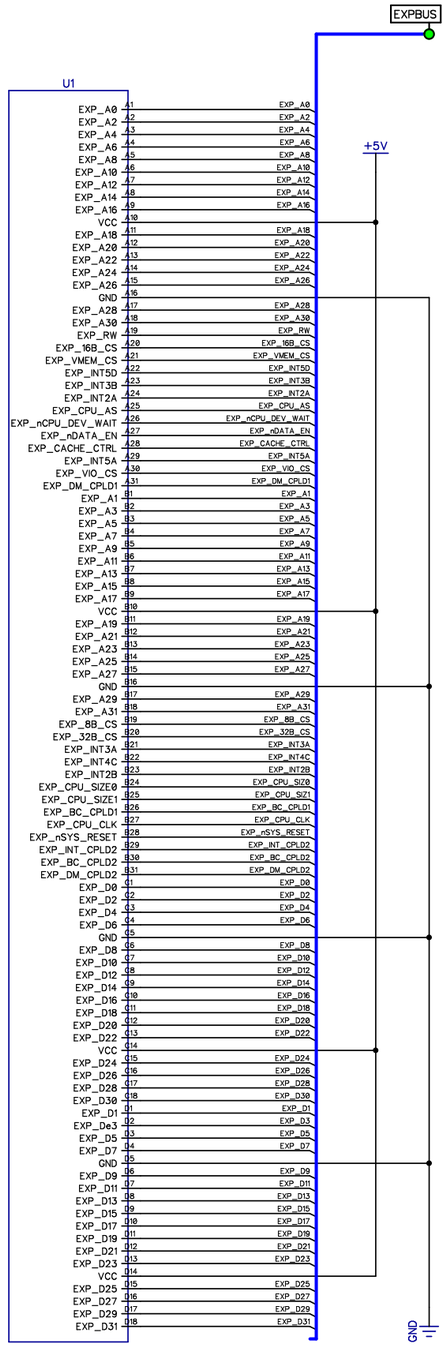
EXPBUS
U1
+5V
GND
EXP_A0 A1 EXP_A0
EXP_A2 A2 EXP_A2
EXP_A4 A3 EXP_A4
EXP_A6 A4 EXP_A6
EXP_A8 A5 EXP_A8
EXP_A10 A6 EXP_A10
EXP_A12 A7 EXP_A12
EXP_A14 A8 EXP_A14
EXP_A16 A9 EXP_A16
VCC A10
EXP_A18 A11 EXP_A18
EXP_A20 A12 EXP_A20
EXP_A22 A13 EXP_A22
EXP_A24 A14 EXP_A24
EXP_A26 A15 EXP_A26
GND A16
EXP_A28 A17 EXP_A28
EXP_A30 A18 EXP_A30
EXP_RW A19 EXP_RW
EXP_16B_CS A20 EXP_16B_CS
EXP_VMEM_CS A21 EXP_VMEM_CS
EXP_INT5D A22 EXP_INT5D
EXP_INT3B A23 EXP_INT3B
EXP_INT2A A24 EXP_INT2A
EXP_CPU_AS A25 EXP_CPU_AS
EXP_nCPU_DEV_WAIT A26 EXP_nCPU_DEV_WAIT
EXP_nDATA_EN A27 EXP_nDATA_EN
EXP_CACHE_CTRL A28 EXP_CACHE_CTRL
EXP_INT5A A29 EXP_INT5A
EXP_VIO_CS A30 EXP_VIO_CS
EXP_DM_CPLD1 A31 EXP_DM_CPLD1
EXP_A1 B1 EXP_A1
EXP_A3 B2 EXP_A3
EXP_A5 B3 EXP_A5
EXP_A7 B4 EXP_A7
EXP_A9 B5 EXP_A9
EXP_A11 B6 EXP_A11
EXP_A13 B7 EXP_A13
EXP_A15 B8 EXP_A15
EXP_A17 B9 EXP_A17
VCC B10
EXP_A19 B11 EXP_A19
EXP_A21 B12 EXP_A21
EXP_A23 B13 EXP_A23
EXP_A25 B14 EXP_A25
EXP_A27 B15 EXP_A27
GND B16
EXP_A29 B17 EXP_A29
EXP_A31 B18 EXP_A31
EXP_8B_CS B19 EXP_8B_CS
EXP_32B_CS B20 EXP_32B_CS
EXP_INT3A B21 EXP_INT3A
EXP_INT4C B22 EXP_INT4C
EXP_INT2B B23 EXP_INT2B
EXP_CPU_SIZE0 B24 EXP_CPU_SIZ0
EXP_CPU_SIZE1 B25 EXP_CPU_SIZ1
EXP_BC_CPLD1 B26 EXP_BC_CPLD1
EXP_CPU_CLK B27 EXP_CPU_CLK
EXP_nSYS_RESET B28 EXP_nSYS_RESET
EXP_INT_CPLD2 B29 EXP_INT_CPLD2
EXP_BC_CPLD2 B30 EXP_BC_CPLD2
EXP_DM_CPLD2 B31 EXP_DM_CPLD2
EXP_D0 C1 EXP_D0
EXP_D2 C2 EXP_D2
EXP_D4 C3 EXP_D4
EXP_D6 C4 EXP_D6
GND C5
EXP_D8 C6 EXP_D8
EXP_D10 C7 EXP_D10
EXP_D12 C8 EXP_D12
EXP_D14 C9 EXP_D14
EXP_D16 C10 EXP_D16
EXP_D18 C11 EXP_D18
EXP_D20 C12 EXP_D20
EXP_D22 C13 EXP_D22
VCC C14
EXP_D24 C15 EXP_D24
EXP_D26 C16 EXP_D26
EXP_D28 C17 EXP_D28
EXP_D30 C18 EXP_D30
EXP_D1 D1 EXP_D1
EXP_De3 D2 EXP_D3
EXP_D5 D3 EXP_D5
EXP_D7 D4 EXP_D7
GND D5
EXP_D9 D6 EXP_D9
EXP_D11 D7 EXP_D11
EXP_D13 D8 EXP_D13
EXP_D15 D9 EXP_D15
EXP_D17 D10 EXP_D17
EXP_D19 D11 EXP_D19
EXP_D21 D12 EXP_D21
EXP_D23 D13 EXP_D23
VCC D14
EXP_D25 D15 EXP_D25
EXP_D27 D16 EXP_D27
EXP_D29 D17 EXP_D29
EXP_D31 D18 EXP_D31

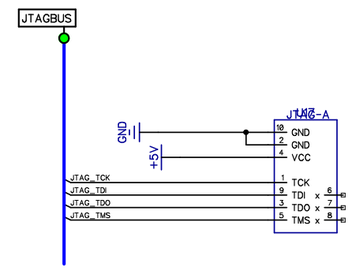
JTAGBUS
GND
+5V
JTAG-A
10. GND
2. GND
4. VCC
JTAG_TCK 1. TCK
JTAG_TDI 9. TDI x 6
JTAG_TDO 3. TDO x 7
JTAG_TMS 5. TMS x 8

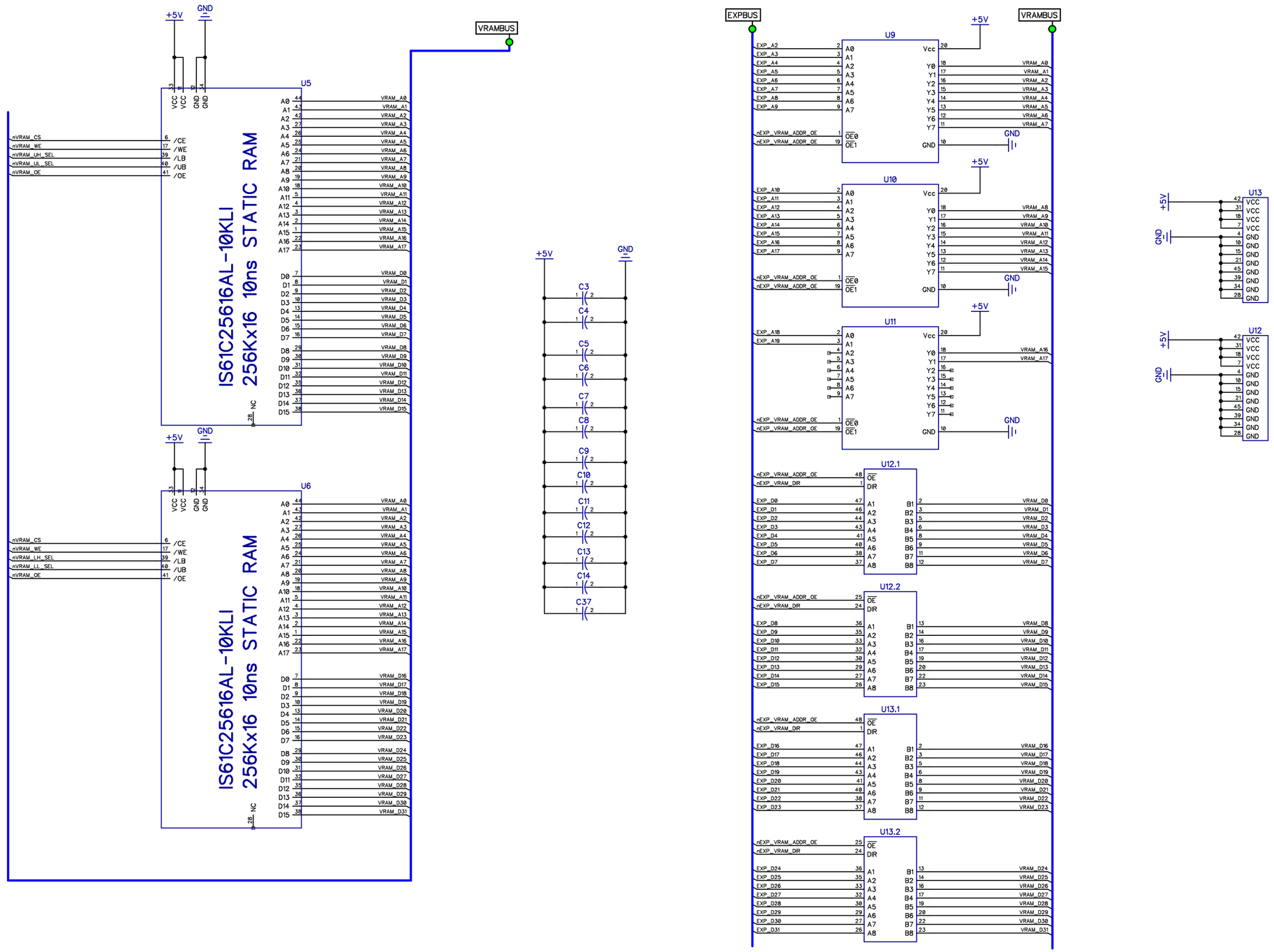
VRAMBUS
EXPBUS
U5
IS61C25616AL-10KLI
256Kx16 10ns STATIC RAM
U6
IS61C25616AL-10KLI
256Kx16 10ns STATIC RAM
nVRAM_CS
nVRAM_WE
nVRAM_UH_SEL
nVRAM_UL_SEL
nVRAM_OE
nVRAM_LH_SEL
nVRAM_LL_SEL
/CE
/WE
/LB
/UB
/OE
VCC
GND
NC
+5V
GND
C3
C4
C5
C6
C7
C8
C9
C10
C11
C12
C13
C14
C37
U9
U10
U11
U12.1
U12.2
U13.1
U13.2
U12
U13
OE0
OE1
OE
DIR

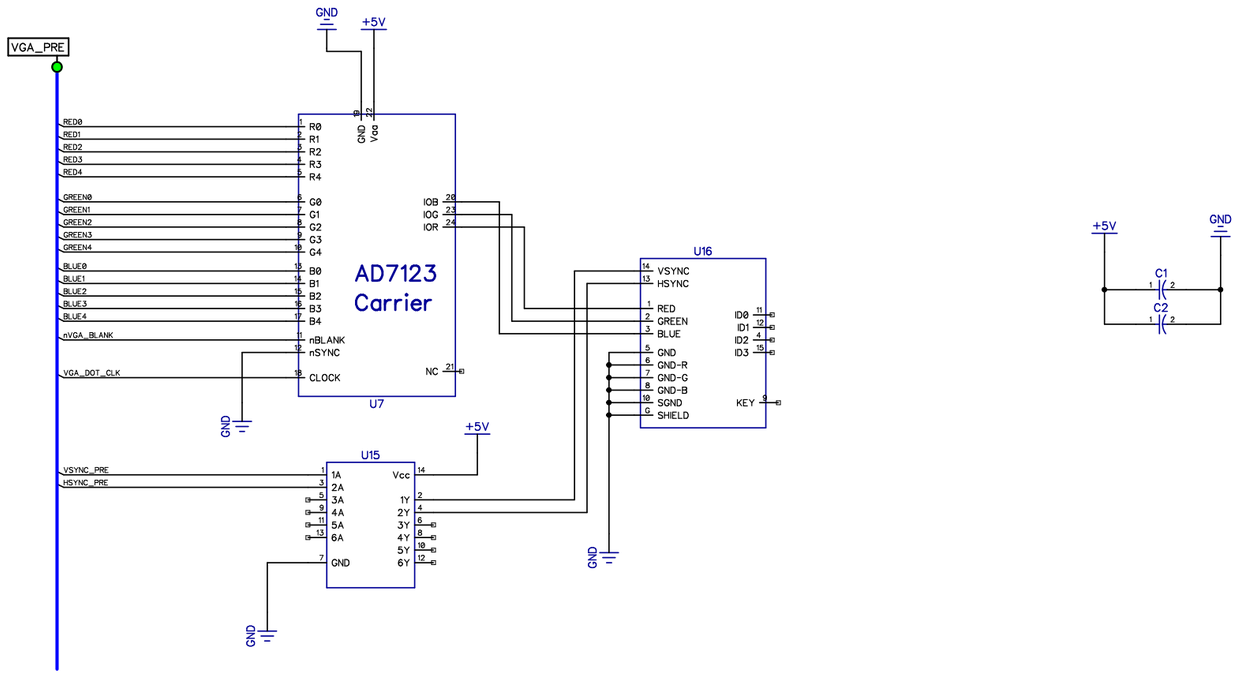
VGA_PRE
GND
+5V
AD7123
Carrier
U7
RED0
RED1
RED2
RED3
RED4
GREEN0
GREEN1
GREEN2
GREEN3
GREEN4
BLUE0
BLUE1
BLUE2
BLUE3
BLUE4
nVGA_BLANK
VGA_DOT_CLK
R0
R1
R2
R3
R4
G0
G1
G2
G3
G4
B0
B1
B2
B3
B4
nBLANK
nSYNC
CLOCK
GND
Vaa
IOB
IOG
IOR
NC
U15
VSYNC_PRE
HSYNC_PRE
1A
2A
3A
4A
5A
6A
GND
Vcc
1Y
2Y
3Y
4Y
5Y
6Y
U16
VSYNC
HSYNC
RED
GREEN
BLUE
GND
GND-R
GND-G
GND-B
SGND
SHIELD
ID0
ID1
ID2
ID3
KEY
C1
C2