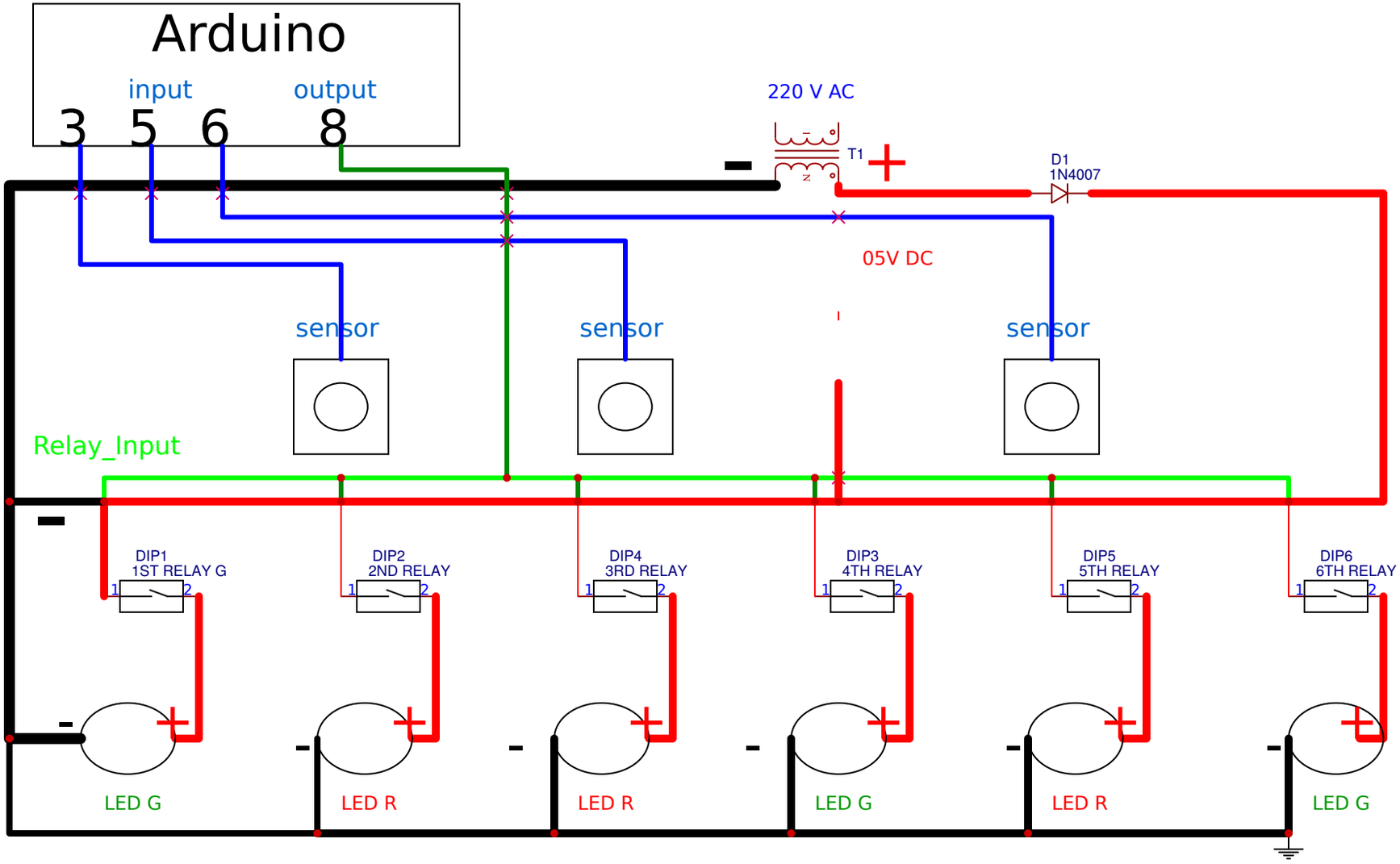

TITLE: circuit inside the hole		REV: 1.0
	Company: JUMBLE	Sheet: 1/1
	Date: 2019-04-06 Drawn By: JEFF	