Circuit Diagram:

Half Rectifier:

without Filter.

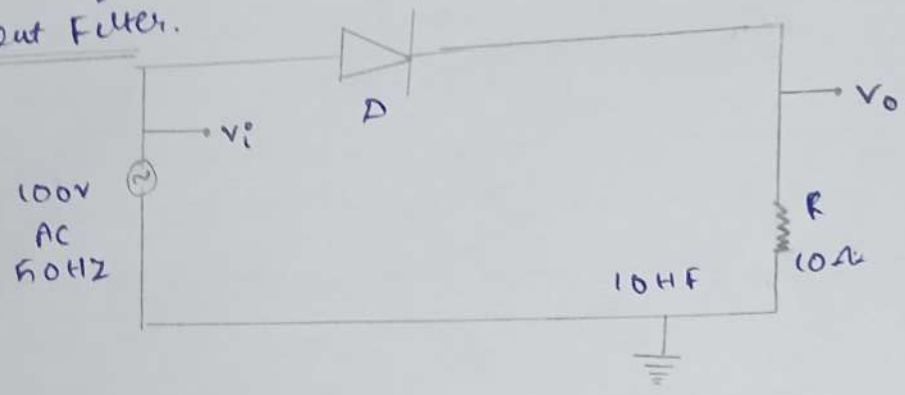

with Filter:

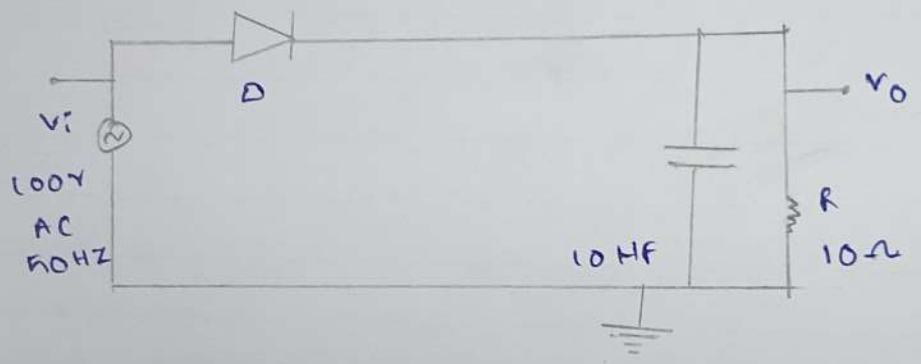

Tabulation:

Input	voltage	output voltage			
		without Filter		with Filter	
$V_m(t)$	V(ms)	V_m (V)	t (ms)	V_m(V)	t (ms)
100V	20ms	100V	100ms	100V, 85V	5ms, 25ms

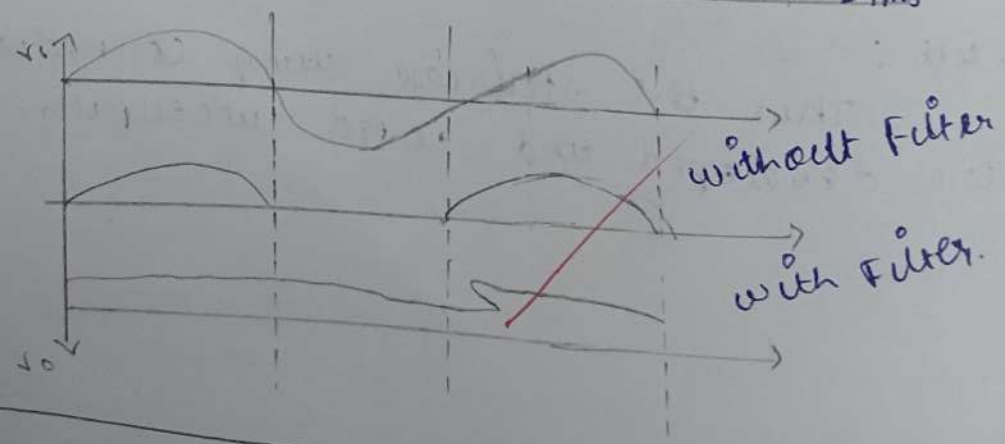

Half wave and Full wave Rectifier.

Aim:

To simulate the following circuits proteus

i) Half wave rectifier

ii) Full wave rectifier.

Apparatus Required:

Laptop with proteus software

Theory:

A rectifier is a circuit that converts alternating current (AC) into direct current (DC).

Half wave Rectifier:

Half wave rectifier conducts only during positive half cycle. During positive half cycle the diode conducts and the output voltage is equal to the input voltage. During negative half cycle, the diode does not conduct and the output voltage is equal to zero.

Full wave rectifier:

Full wave rectifier conducts during both positive and negative half cycles.

SAVEETHA ENGINEERING COLLEGE SAVEETHA NAGAR 602 105 BE THE BEST

Circuit Diagram:

Full wave Rectifier

Without Filter:

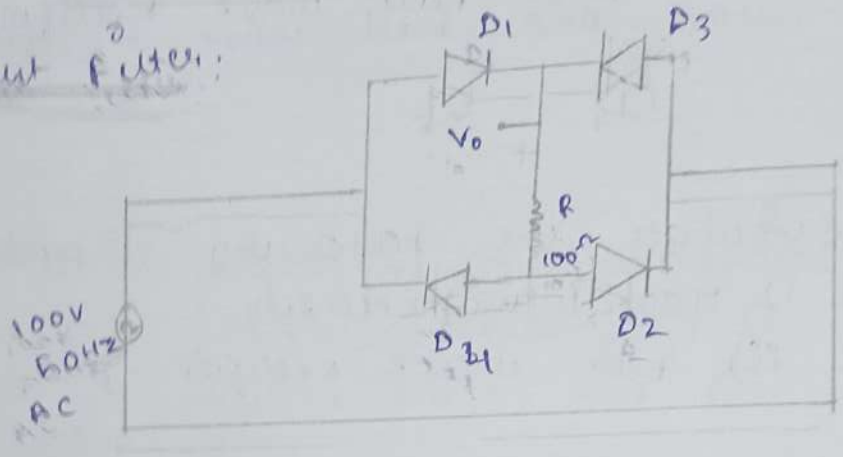

With Filter:

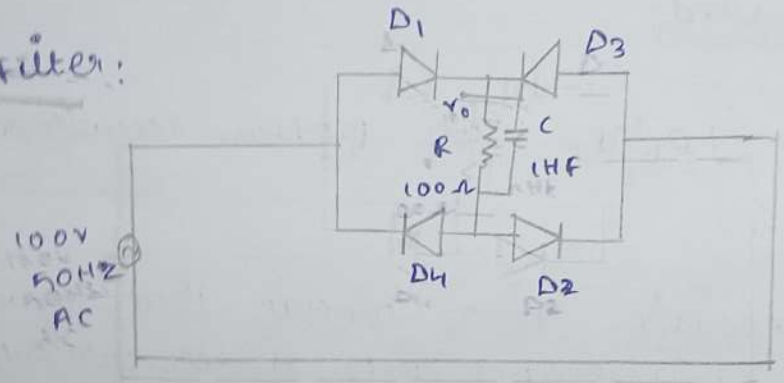

Tabulation:

Input voltage		output voltage without Filter		with Filter	
Vm(V)	t(ms)	Vm(V)	t(ms)	Vm(V)	t(ms)
50V	20ms	50V	5 ms	100V, 46V	5ms, 14 ms

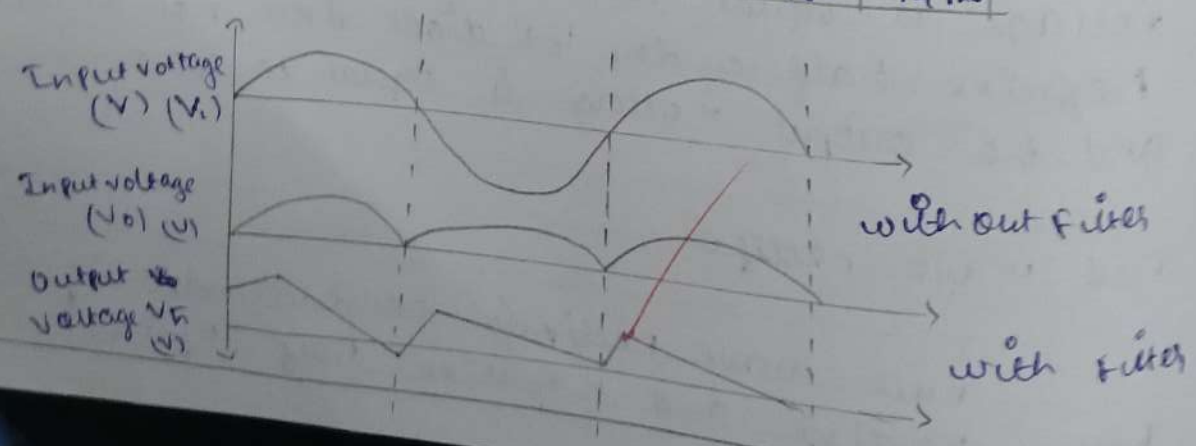

During positive half cycle, the output voltage is equal to input voltage during negative half cycle. The output voltage is equal to negative of the input voltage. The output of the rectifier circuit is impure DC.

In order to get, pure DC the output is filtered by a capacitor filter.

Procedure:

1. Drag the required components from the protects library.
2. connect the components as per the circuit diagram.
3. measure the input and output voltages and note in tabulation.
4. Draw the graph for input and output voltages.

Half wave rectifier without capcitor.

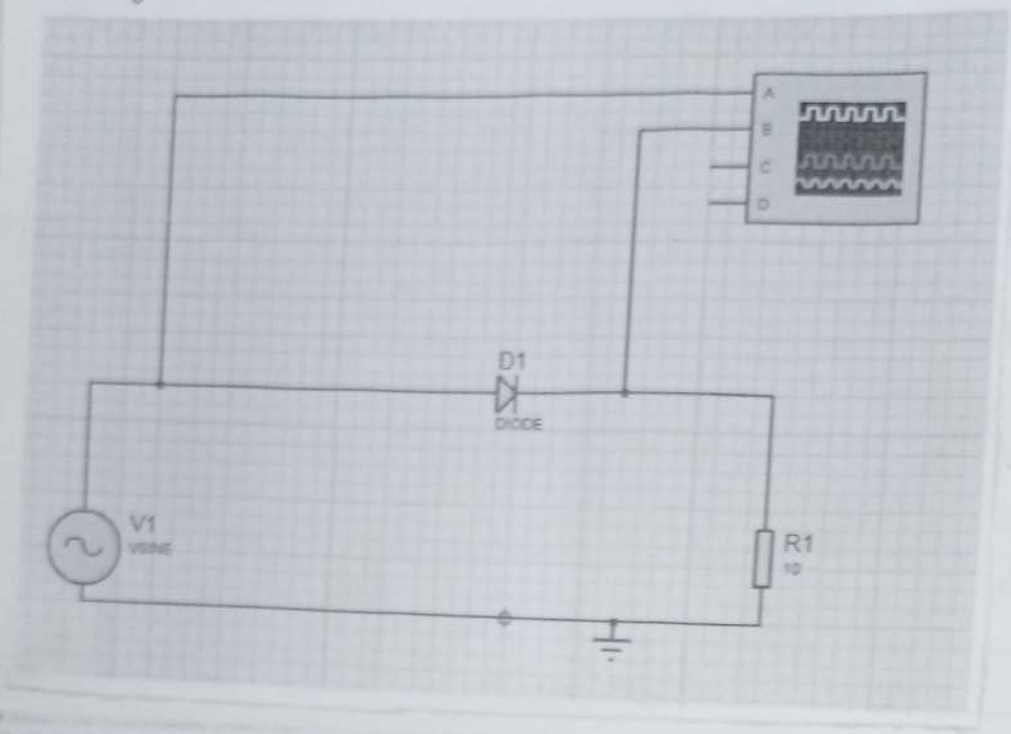

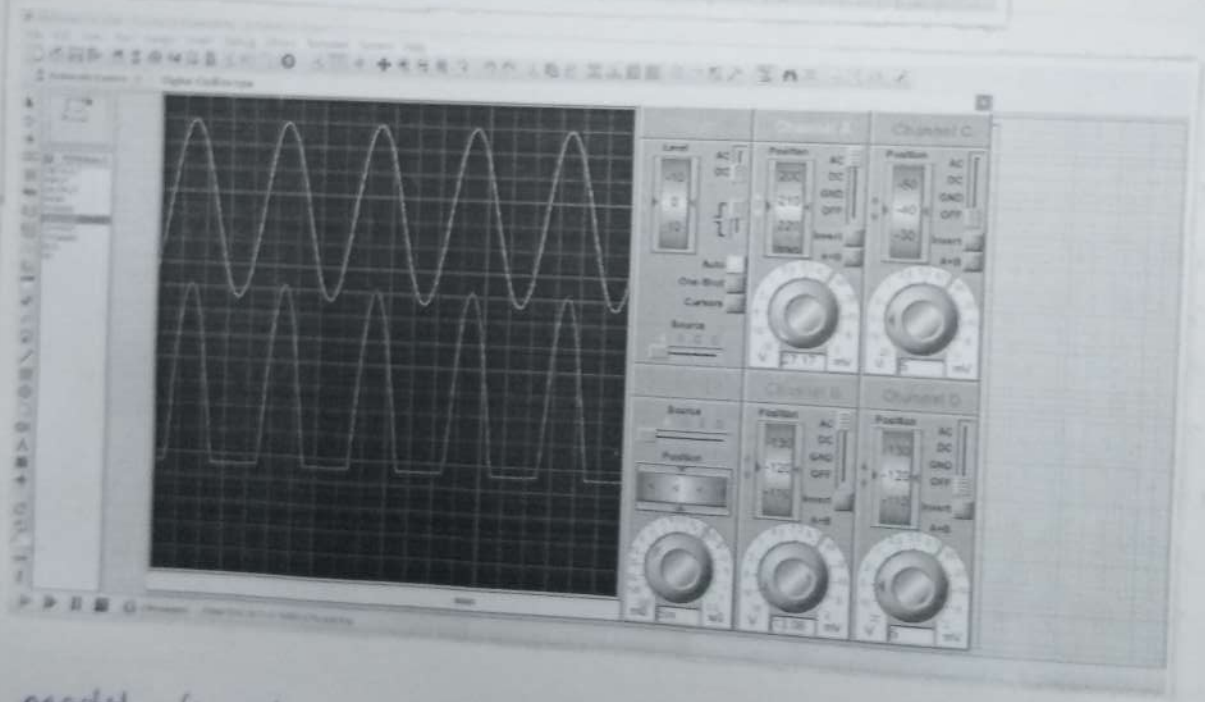

~~Model~~ Graph:

Half wave rectifier with capacitor

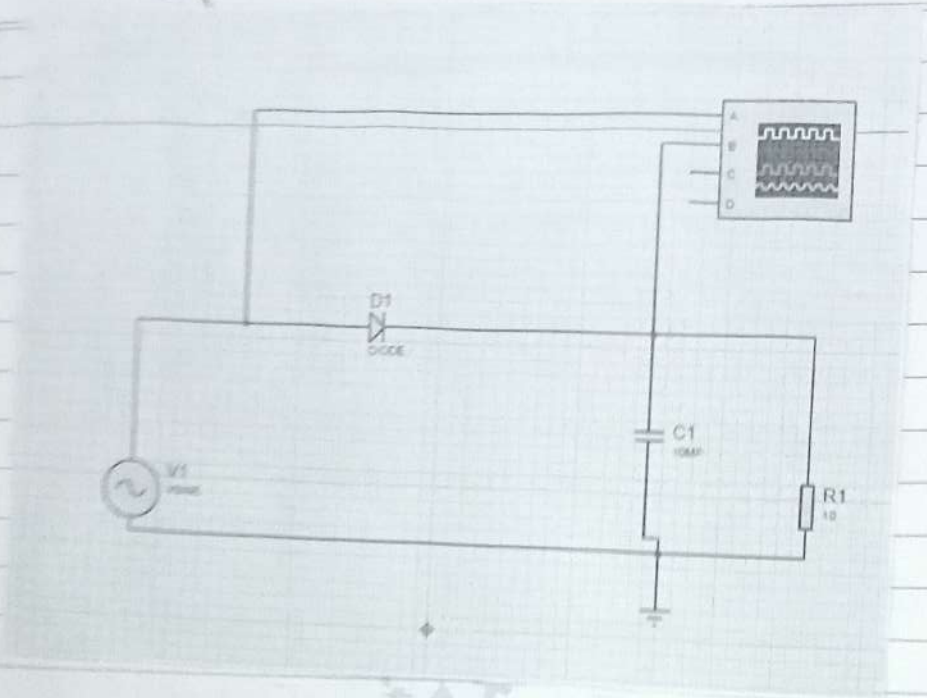

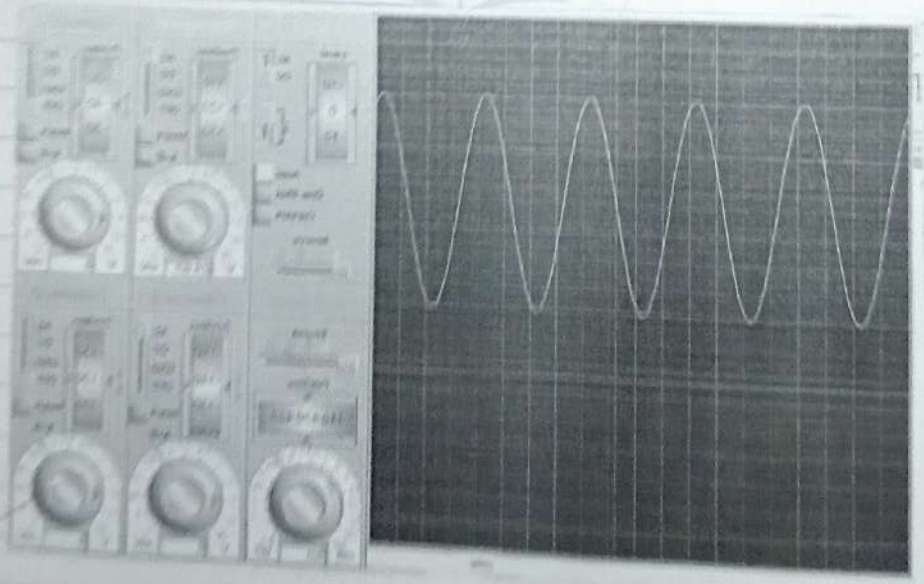

Full wave rectifier without capacitor.

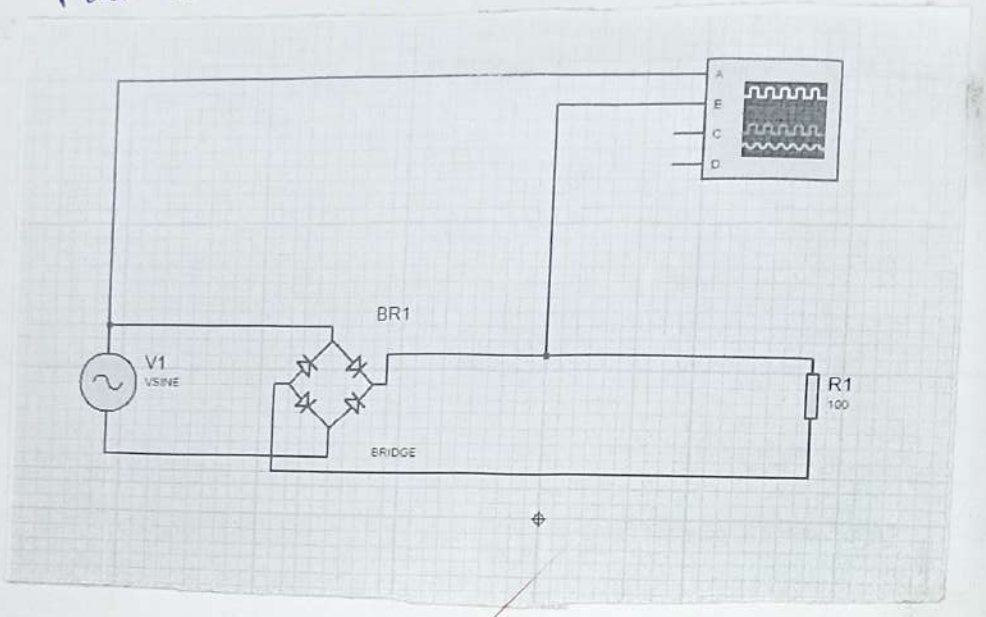

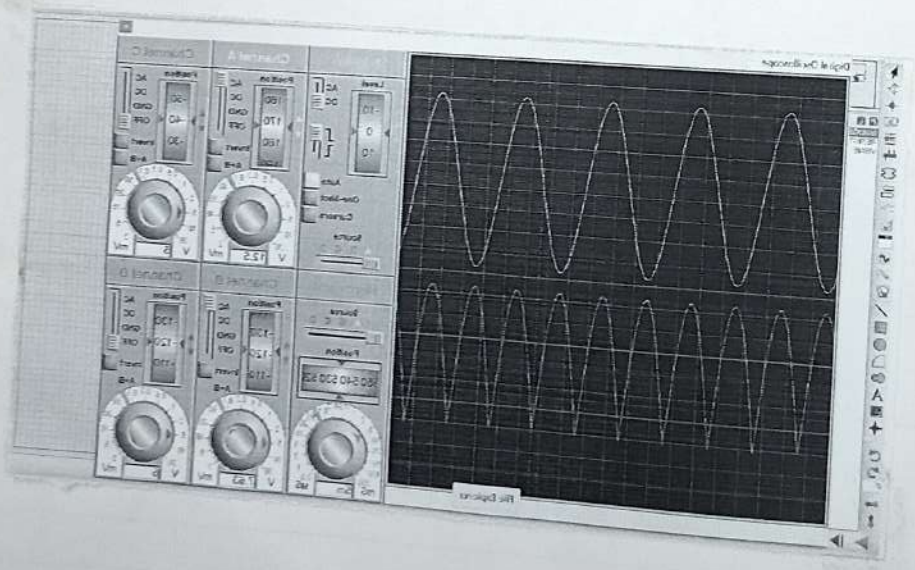

Expt. No.

Full wave rectifier with capcitor.

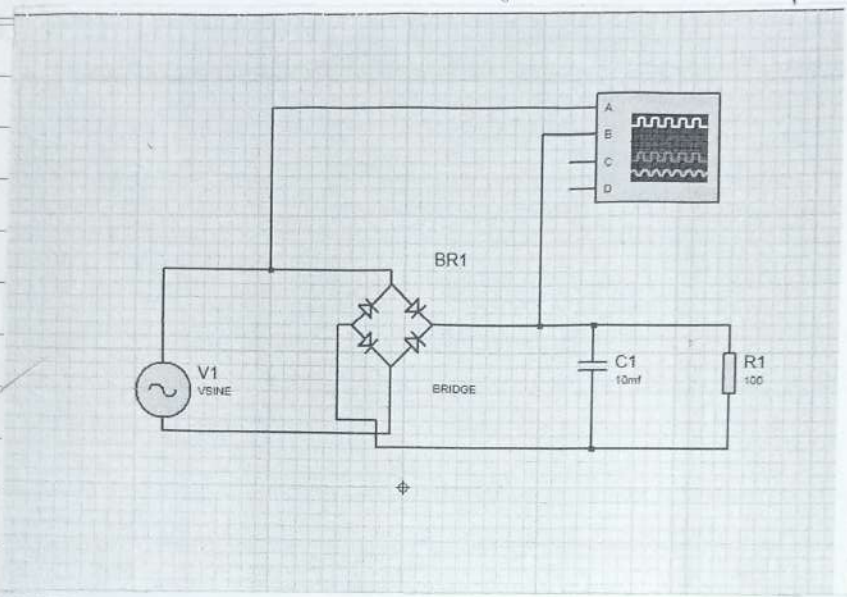

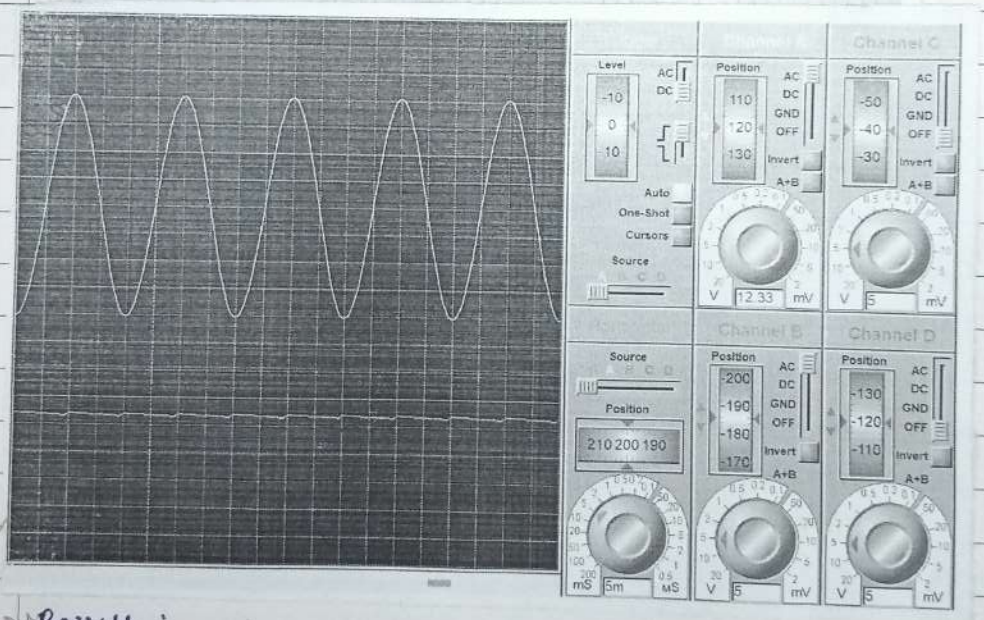

100

Result :

Thus the simulation of Half wave rectifier and Full wave rectifier in with and without filter successfully completed.

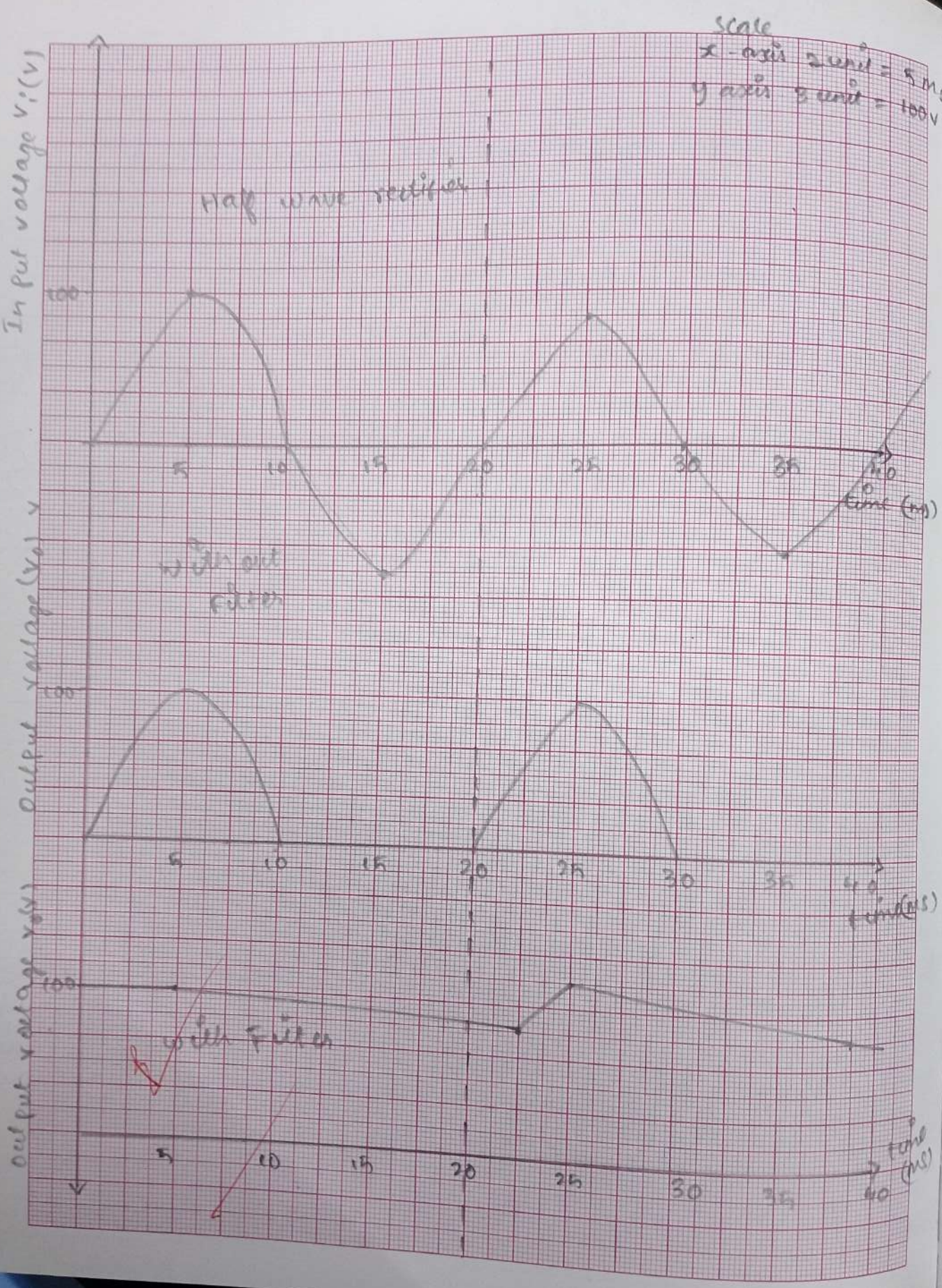
Scale
x-axis 2 unit = 5 ms
y axis 5 unit = 100 V
Half wave rectifier
Input voltage V_i (V)
100
5
10
15
20
25
30
35
40
time (ms)
without filter
Output voltage (V_o) V
100
5
10
15
20
25
30
35
40
time (ms)
with filter
output voltage V_o (V)
100
5
10
15
20
25
30
35
40
time (ms)

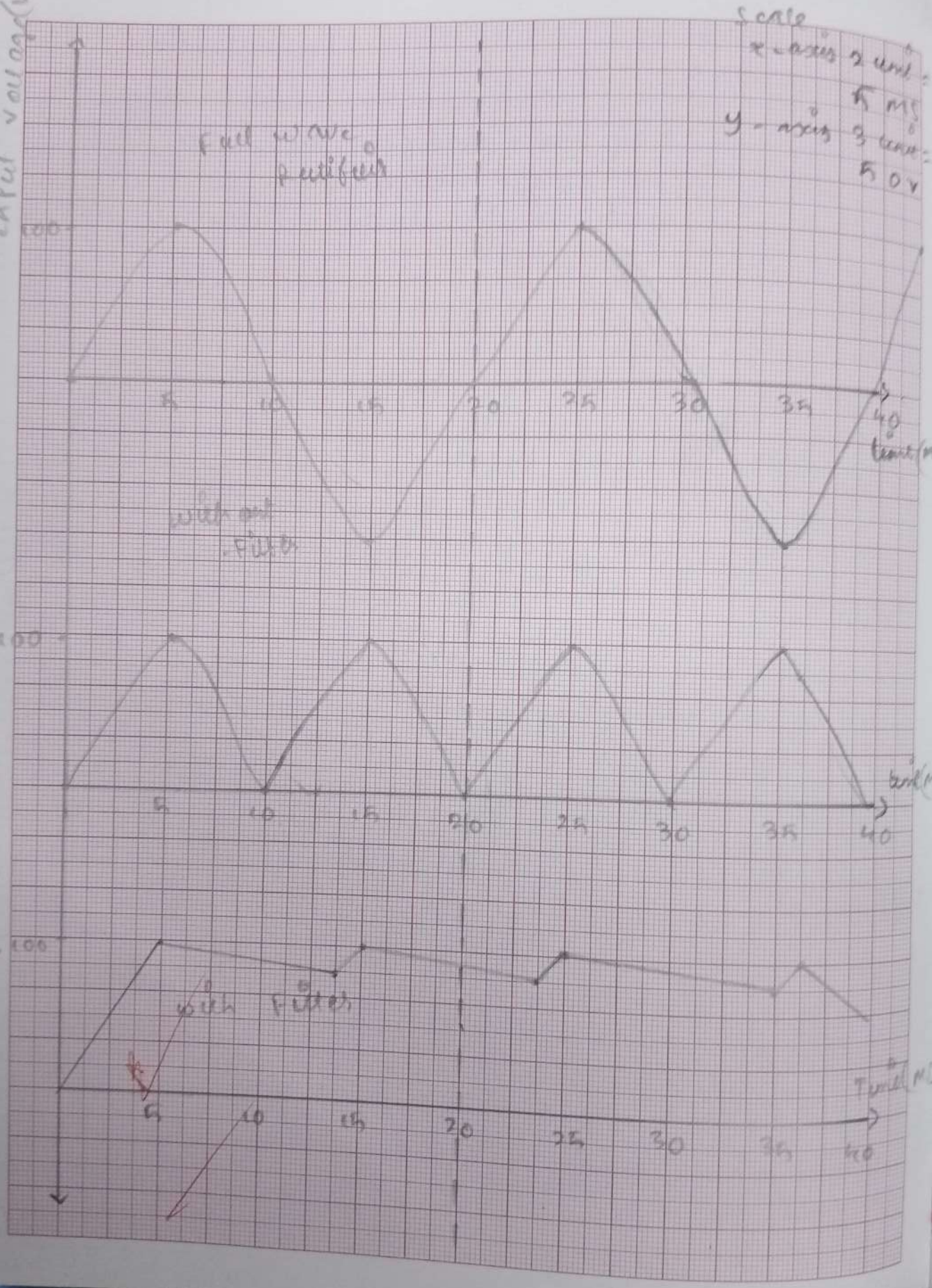
Scale
x-axis 2 unit = 5 ms
y-axis 3 unit = 50 V
Full wave rectifier
Input voltage (Vi) V
100
5
10
15
20
25
30
35
40
time (ms)
with out filter
Output voltage (Vo) V
100
time (ms)
with filter
Output voltage Vo (V)
100
time (ms)