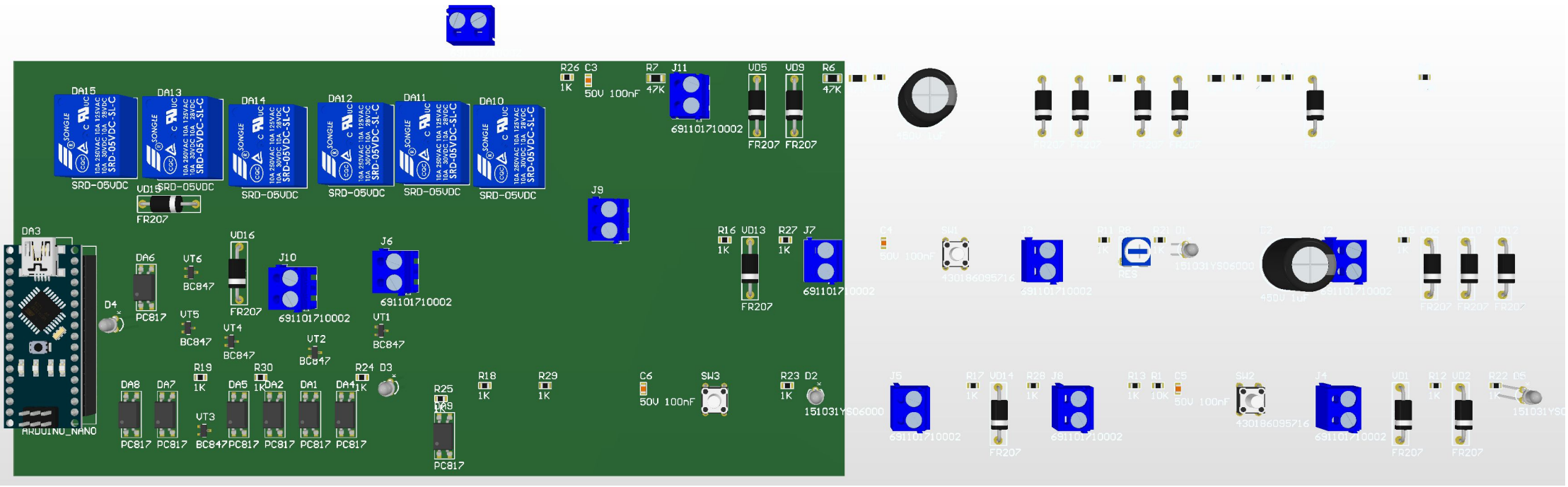
DA15
DA13
DA14
DA12
DA11
DA10
SRD-05VDC
VD15
FR207
DA3
ARDUINO_NANO
DA6
PC817
VT6
BC847
VD16
FR207
J10
691101710002
J6
691101710002
D4
VT5
BC847
VT4
BC847
VT2
BC847
VT1
BC847
R19
1K
R30
1K
R24
1K
D3
DA8
DA7
DA5
DA2
DA1
DA4
PC817
VT3
BC847
R25
1K
DA9
PC817
R18
1K
R29
1K
R26
1K
C3
50V 100nF
R7
47K
J11
691101710002
VD5
VD9
FR207
R6
47K
J9
R16
1K
VD13
FR207
R27
1K
J7
C6
50V 100nF
SW3
R23
1K
D2
151031YS06000