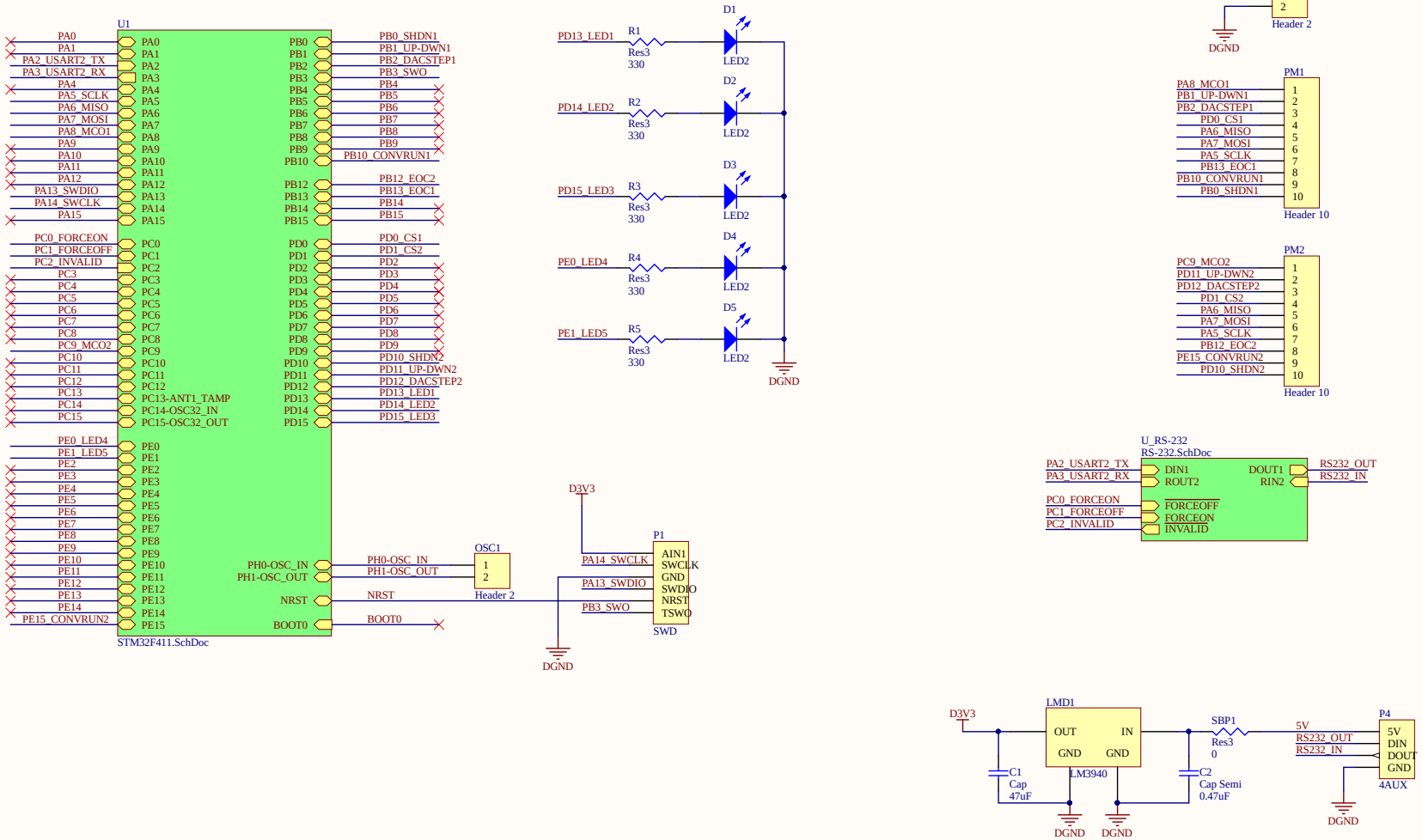

Title	HANC_Digital_TS.SchDoc	
Size: B	Number	Revision
Date: 2/27/2017	Sheet of	
File: C:\Users\..\HANC_Digital_TS.SchDoc	Drawn By:	

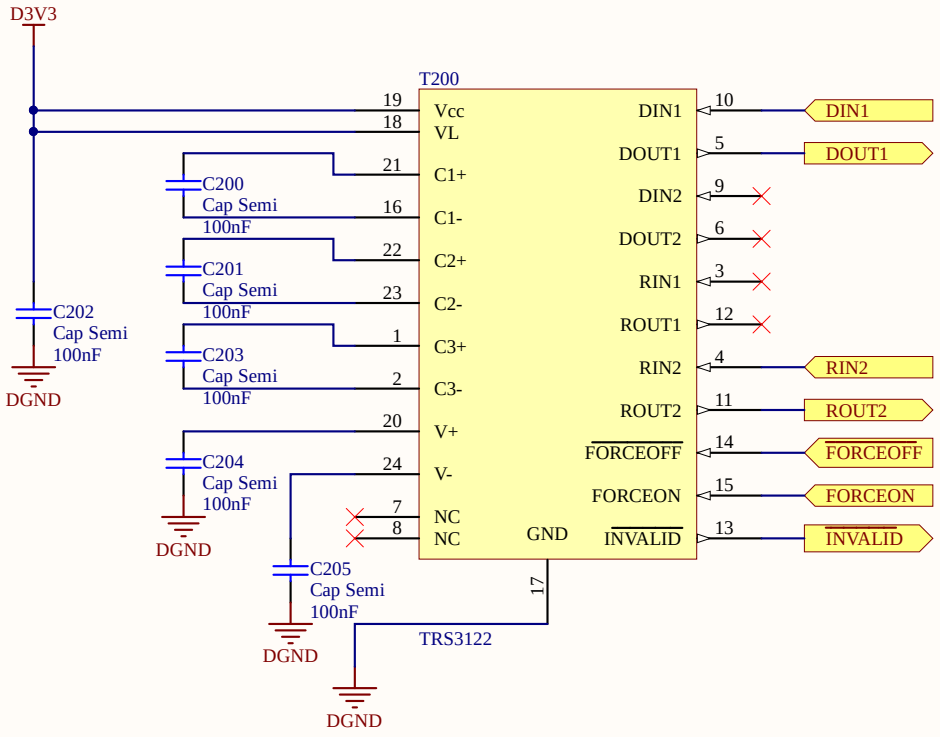

Title		
Size: A	Number	Revision
Date: 2/27/2017		Sheet of
File: C:\Users\..\RS-232.SchDoc		Drawn By:

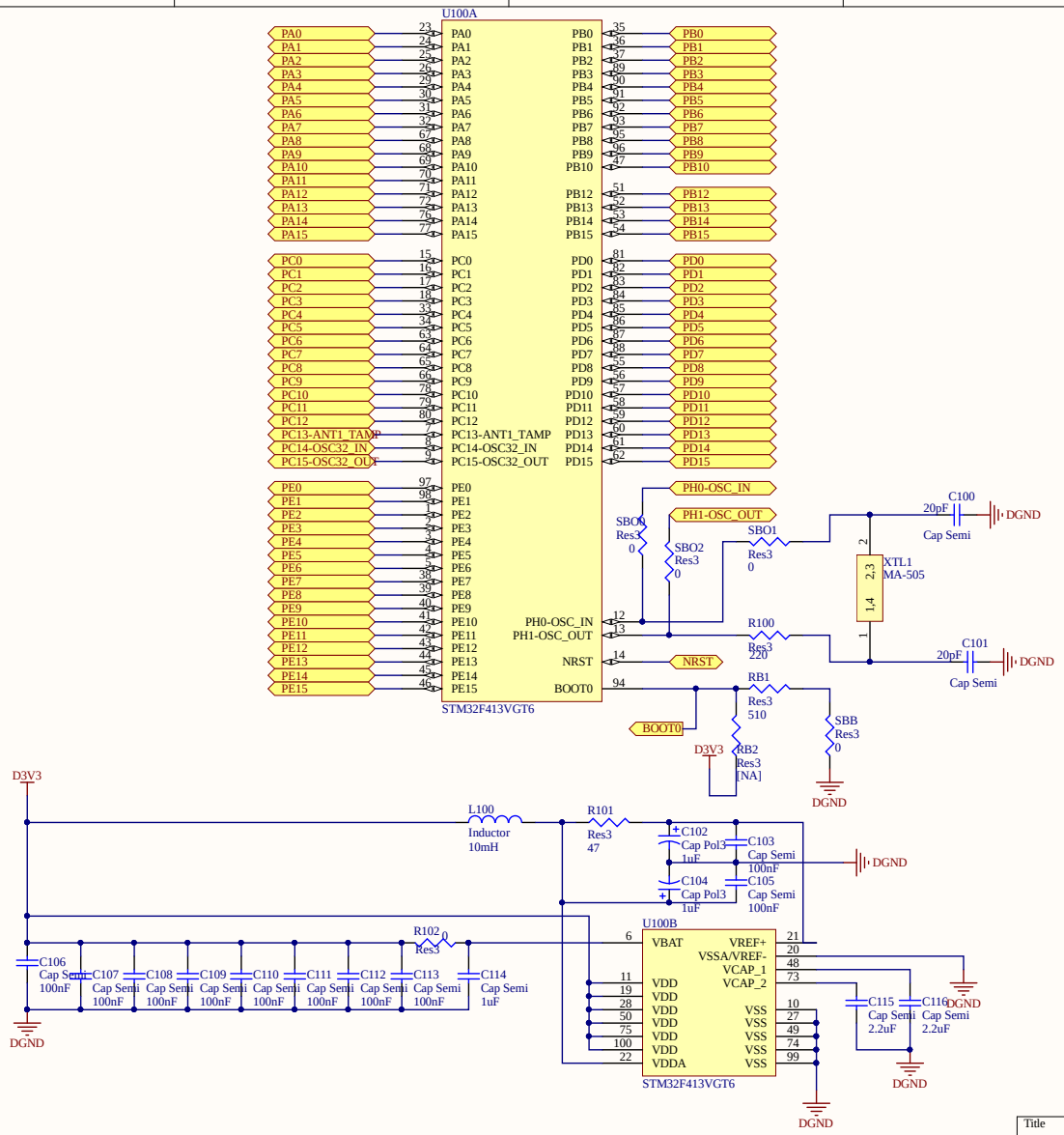

Title		
Size: B	Number:	Revision:
Date: 2/27/2017		Sheet of
File: C:\Users\..\STM32F411.SchDoc		Drawn By:

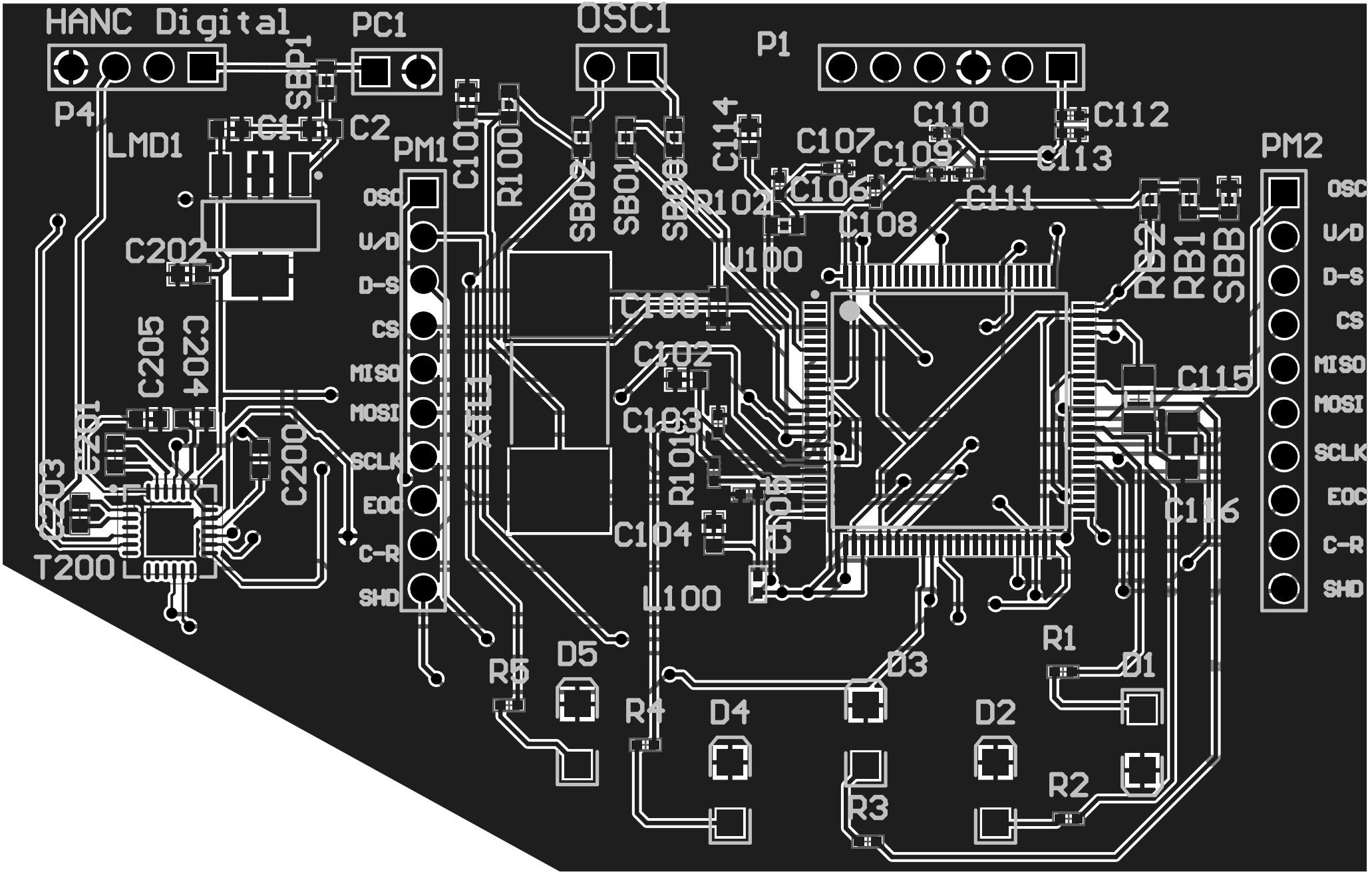
HANC Digital
PC1
OSC1
P1
P4
LMD1
SBP1
C1
C2
PM1
C101
R100
SB02
SB01
SB00
C114
C107
C110
C112
C109
C113
C106
R102
C111
C108
PM2
RB2
RB1
SBB
OSC
U/D
D-S
CS
MISO
MOSI
SCLK
EOC
C-R
SHD
C202
C205
C204
C201
C203
C200
T200
X111
U100
C100
C102
C103
R101
C105
C104
L100
C115
C116
R5
D5
R4
D4
D3
D2
R1
D1
R2
R3

Designator	PartNumber	Comment	Description	Footprint	LibRef	Quantity
U100	STM32F411VET6	STM32F413VGT6	ARM Cortex-M4 32-Bit DSP+FPU, 1024 KB Flash, 82 I/Os, 100-Pin LQFP, -40 to 85 degC, Tray	STM-LQFP100_V	CMP-1771-00004-1	1
LMD1	LM3940IMP-3.3/NOPB	LM3940		SOT223_N	Component_1	1
T200	TRS3122ERGET	TRS3122		QFN50P485X485X100_HS-25N	Component_1	1
R100, R102, RB1, RB2, SBB, SBO0, SBO1, SBO2, SBP1	RC0402JR-07220RL, RC0402JR-070RL, [NoParam], [NoParam], [NoParam], RC0402JR-070RL, RC0402JR-070RL, RC0402JR-070RL, Keystone Electronics 5110	Res3	Resistor, Resistor, Resistor, Resistor, Resistor, SB PH0, Resistor, SB_PH1, Resistor	J1-0603	Res3	9
PM1, PM2		Header 10	Header, 10-Pin	HDR1X10	Header 10	2
P1		SWD	Header, 6-Pin	HDR1X6	Header 6	1
P4		4AUX	Header, 4-Pin	HDR1X4	Header 4	1
OSC1, PC1		Header 2	Header, 2-Pin	HDR1X2	Header 2	2
XTL1	HC-49S-C20QSA-8.000MHZ	MA-505		CAPC15256X06N	MA-505	1
C115, C116	CC1206KKX7R7BB225	Cap Semi	Capacitor (Semiconductor SIM Model)	C1206	Cap Semi	2
C1	CL10A476MQENRBE	Cap	Capacitor (Semiconductor SIM Model)	1608[0603]	Cap Semi	1
C102, C104	TACL105K016XTA	Cap Pol3	TACL105K016XTA	1608[0603]	Cap Pol3	2
C2, C100, C101, C114, C200, C201, C202, C203, C204, C205	GRM033R60J474KE90D, CC0402JRNPO9BN200, CC0402JRNPO9BN200, CC0603KRX5R7BB105, CC0603JRX7R7BB104, CC0603JRX7R7BB104, CC0603JRX7R7BB104, CC0603JRX7R7BB104, CC0603JRX7R7BB104, CC0603JRX7R7BB104	Cap Semi	Capacitor (Semiconductor SIM Model)	1608[0603]	Cap Semi	10
L100	LI0402E600R-10	Inductor	Inductor	0402C-GENERIC	Inductor	1
C103, C105, C106, C107, C108, C109, C110, C111, C112, C113	C1005X5R1E103K050BA	Cap Semi	C1005X5R1E103K050BA, C1005X5R1E103K050BA, Capacitor (Semiconductor SIM Model), Capacitor (Semiconductor SIM Model), Capacitor (Semiconductor SIM Model), Capacitor (Semiconductor SIM Model), Capacitor (Semiconductor SIM Model), Capacitor (Semiconductor SIM Model), Capacitor (Semiconductor SIM Model), Capacitor (Semiconductor SIM Model)	0402	Cap Semi	10
R1, R2, R3, R4, R5, R101	RC0402FR-07330RL, RC0402FR-07330RL, RC0402FR-07330RL, RC0402FR-07330RL, RC0402FR-07330RL, RC0402FR-0747RL	Res3	Resistor, Resistor, Resistor, Resistor, Resistor, RC0402FR-0747RL	0402	Res3	6
D1, D2, D3, D4, D5	LTST-C150CKT	LED2	Typical RED, GREEN, YELLOW, AM	3.2X1.6X1.1	LED2	5