Кола са спрегнутим калемовима.

Основи електротехнике 2
Предавање: 11. блок

КОЛА СА СПРЕГНУТИМ КАЛЕМОВИМА

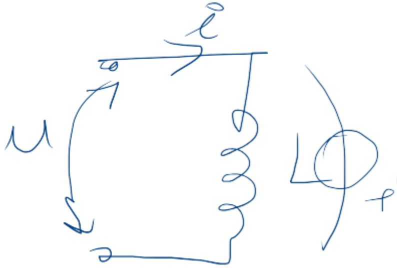

$$u = L\frac{di}{dt} = -e_{ind}$$

$$e_{ind} = -\frac{d\Phi}{dt}$$

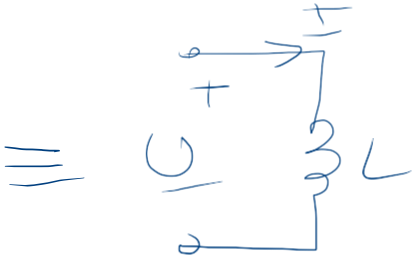

$$\underline{U} = j\omega L \underline{I}$$

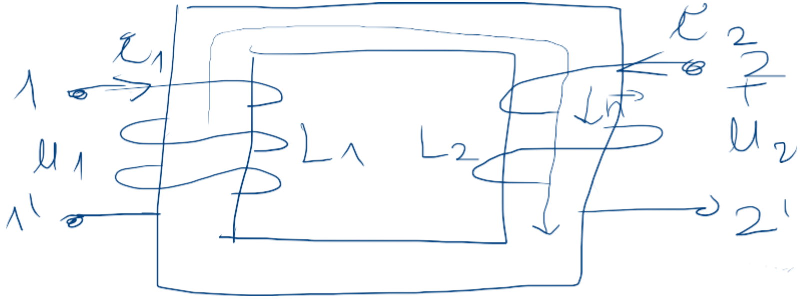
i₁
1
u₁
1'
L₁
L₂
i₂
2
+
u₂
2'

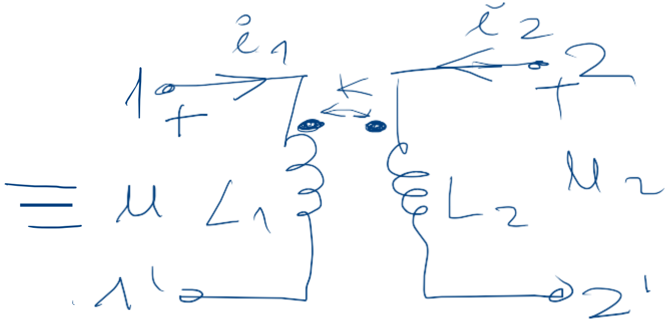
≡
i₁
i₂
1
+
k
2
+
u
L₁
L₂
u₂
1'
2'

$$u_1 = L_1\frac{di_1}{dt} + L_{12}\frac{di_2}{dt}$$

$$u_2 = L_2\frac{di_2}{dt} + L_{21}\frac{di_1}{dt}$$

$$\underline{U}_1 = j\omega L_1 \underline{I}_1 + j\omega L_{12}\underline{I}_2$$

$$\underline{U}_2 = j\omega L_2 \underline{I}_2 + j\omega L_{21}\underline{I}_1$$

$$L_{12} = L_{21} = \pm k\sqrt{L_1 L_2} = M$$

$$0 \le k \le 1$$

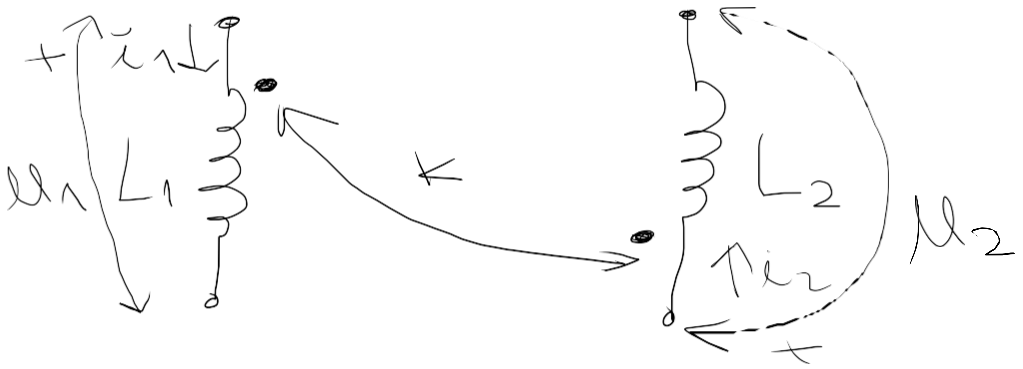
+
i_1
u_1
L_1
k
L_2
i_2
u_2
+

$$\underline{U}_1 = j\omega L_1 \underline{I}_1 + j\omega L_{12} \underline{I}_2$$

$$L_{12} = k\sqrt{L_1 L_2} > 0$$

јер овде стиже у маркер

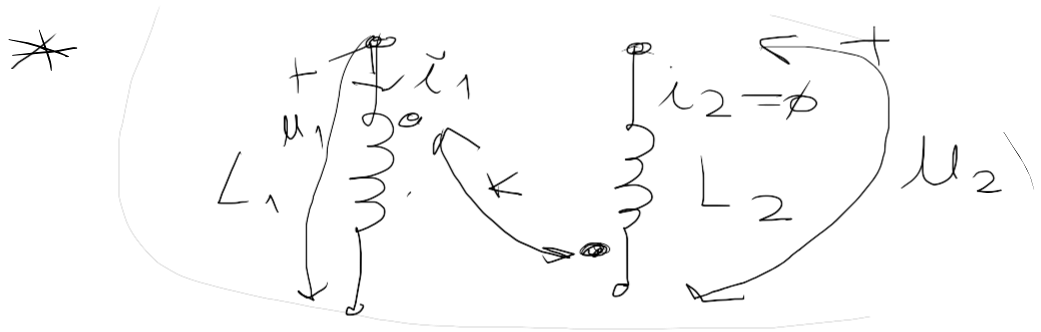
*
+
i_1
u_1
L_1
k
$i_2 = 0$
L_2
u_2
+

L_{12}

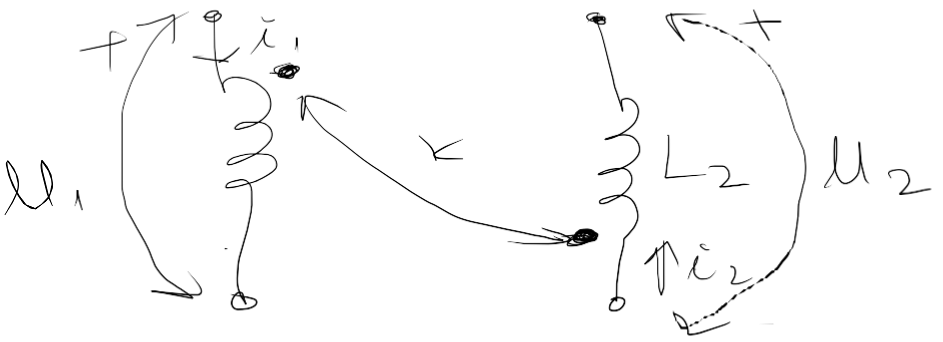
+
i_1
u_1
k
L_2
u_2
i_2
+

$$\underline{U}_1 = j\omega L_1 \underline{I}_1 + j\omega L_{12} \underline{I}_2$$

$$\underline{U}_2 = -j\omega L_2 \underline{I}_2 - j\omega L_{12} \underline{I}_1$$

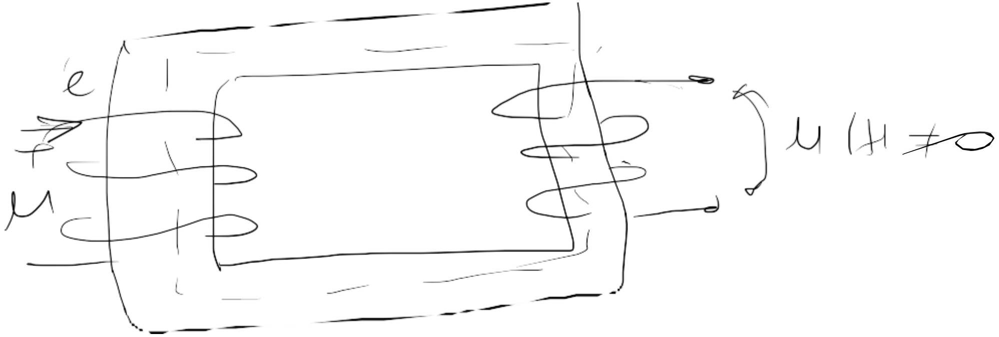

* *

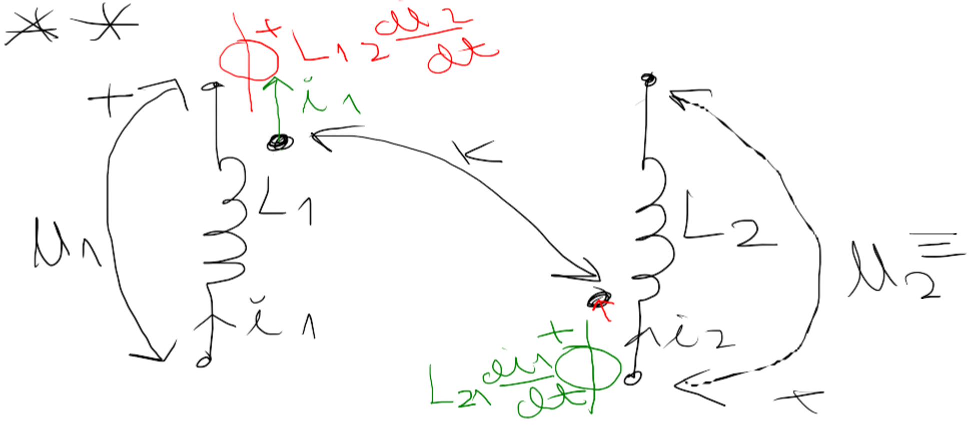

$L_{12}\frac{di_2}{dt}$
i_1
L_1
L_2
u_1
u_2
i_1
i_2
$L_{21}\frac{di_1}{dt}$
K

$$\boxed{L\frac{di}{dt} = u}$$

$$L_{12}\frac{di_2}{dt} = [V]$$

$L_{21} > 0$

$L_{12} > 0$

↑

уобичајено

вриједност

у комплексном домену

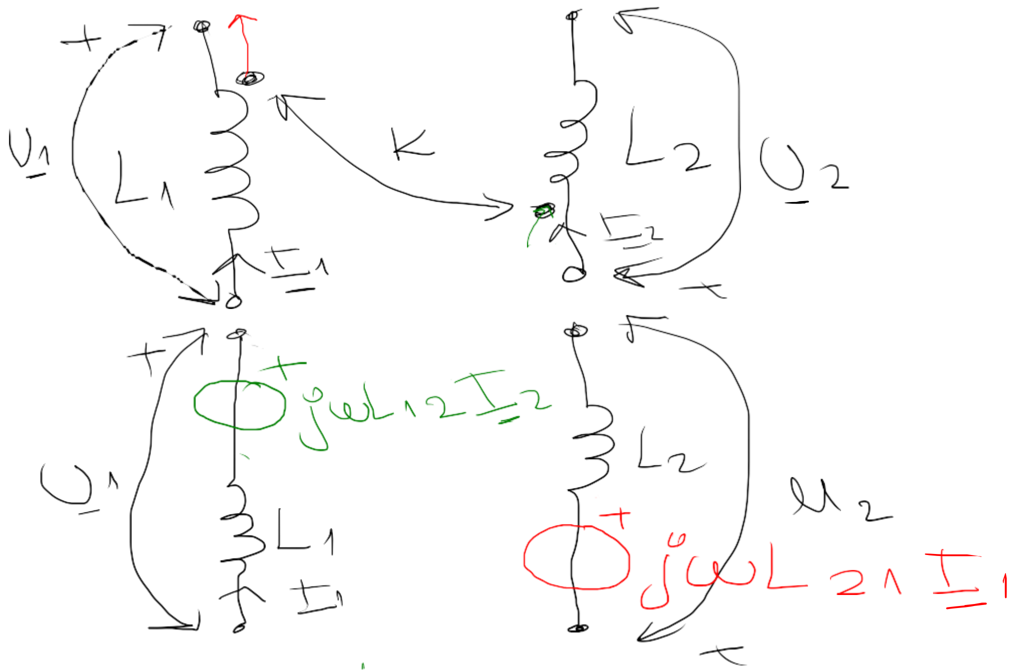

$= U_1$
L_1
L_2
U_2
K
I_1
I_2
U_1
$j\omega L_{12} I_2$
L_1
L_2
I_1
U_2
$j\omega L_{21} I_1$

$L_{12} > 0$ $L_{21} > 0$

ПРИМЈЕР:

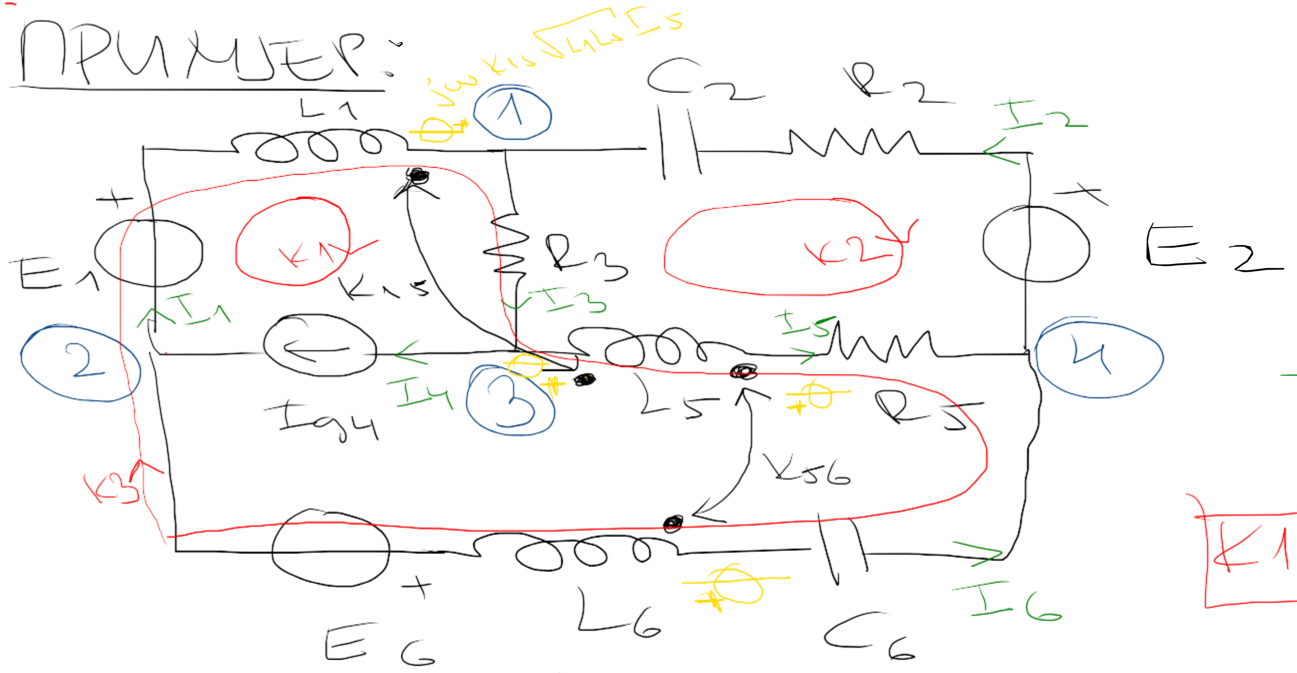

$j\omega K_{15}\sqrt{L_1L_5}\,\underline{I}_5$
L1
C2
R2
I2
①
+
E1
K1
K15
R3
I3
K2
+
E2
I1
②
Ig4
I4
③
L5
I5
R5
④
K56
K3
+
E6
L6
C6
I6

$n_č - 1 = 3$

① $\underline{I}_1 + \underline{I}_2 = \underline{I}_3$

② $\underline{I}_4 = \underline{I}_1 + \underline{I}_6$

③ $\underline{I}_3 = \underline{I}_4 + \underline{I}_5$

$n_k = n_g - (n_č - 1) = ③$

$\boxed{K1:}\ \underline{I}_4 = \underline{I}_{g4}$

$$\boxed{K2:}\ -R_2\underline{I}_2 - \frac{1}{j\omega C_2}\underline{I}_2 + \underline{E}_2 - R_5\underline{I}_5 - jK_{56}\omega\sqrt{L_5L_6}\,\underline{I}_6 - j\omega L_5\underline{I}_5 + j\omega K_{15}\sqrt{L_1L_5}\,\underline{I}_1 - R_3\underline{I}_3 = 0$$

$$\boxed{K3:}\ -\underline{E}_1 + j\omega L_1\underline{I}_1 - j\omega K_{15}\sqrt{L_1L_5}\,\underline{I}_5 + R_3\underline{I}_3 - j\omega K_{15}\sqrt{L_1L_5}\,\underline{I}_1 + j\omega L_5\underline{I}_5 + j\omega K_{56}\sqrt{L_5L_6}\,\underline{I}_6 + R_5\underline{I}_5 - \frac{1}{j\omega C_6}\underline{I}_6 - j\omega K_{56}\sqrt{L_5L_6}\,\underline{I}_5 - j\omega L_6\underline{I}_6 + \underline{E}_6 = 0$$

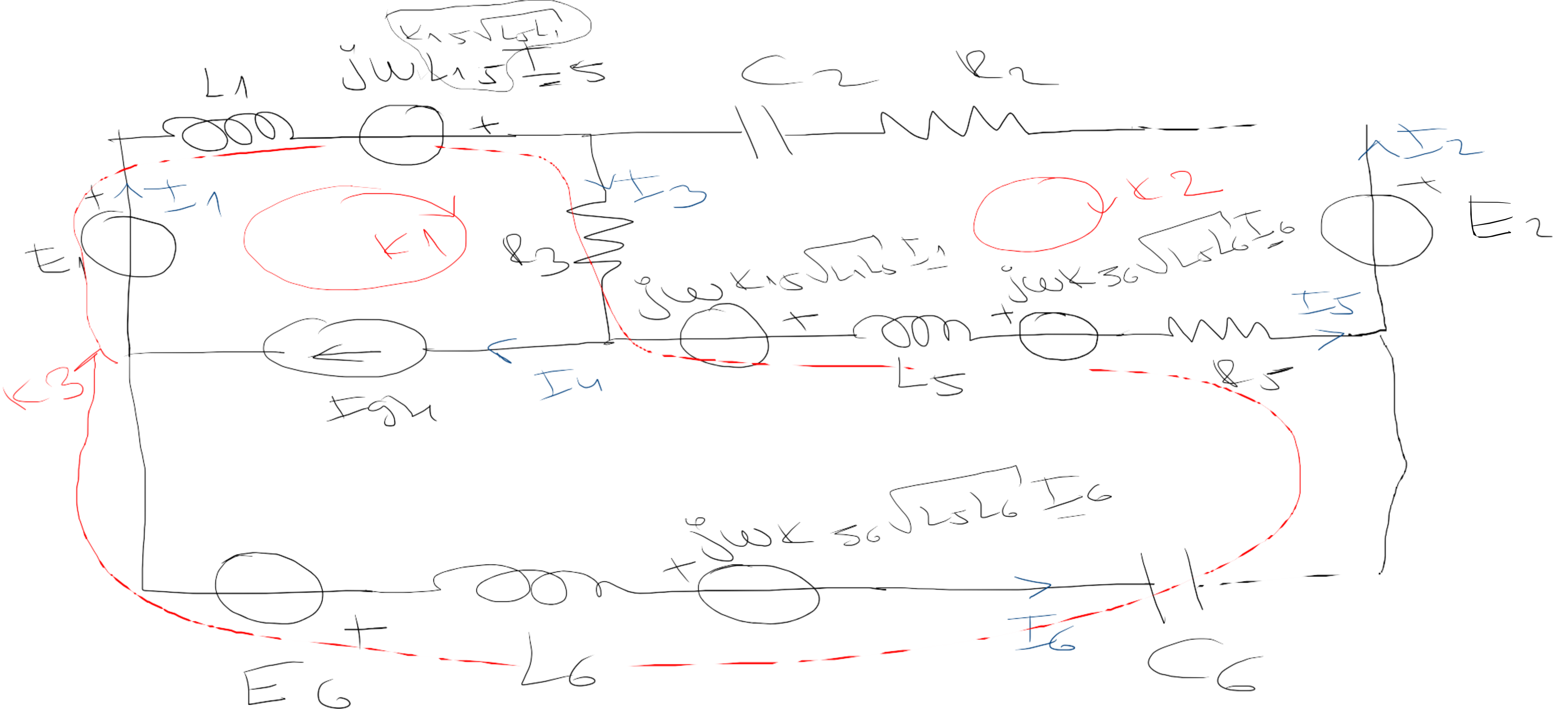
L1
jωL15 I5
K15√L5L1
C2
R2
I2
E2
I1
E1
K1
I3
R3
K2
jωK15√L1L5 I1
jωK36√L5L6 I6
I5
I4
Ig4
L5
R5
K3
jωK56√L5L6 I6
I6
E6
L6
C6

$* \; j\omega L$

$\Rightarrow j\omega K_{15} L_{15}$ $\quad \sqrt{L_1 L_5}$

$\boxed{j\omega K_{15}\sqrt{L_1 L_5}}$

$$K = \frac{|L_{12}|}{\sqrt{L_1 L_2}}$$

$$\boxed{L_{12} = \pm K\sqrt{L_1 L_2}}$$

ЕКВИВАЛЕНТНА ИНДУКТИВНОСТ

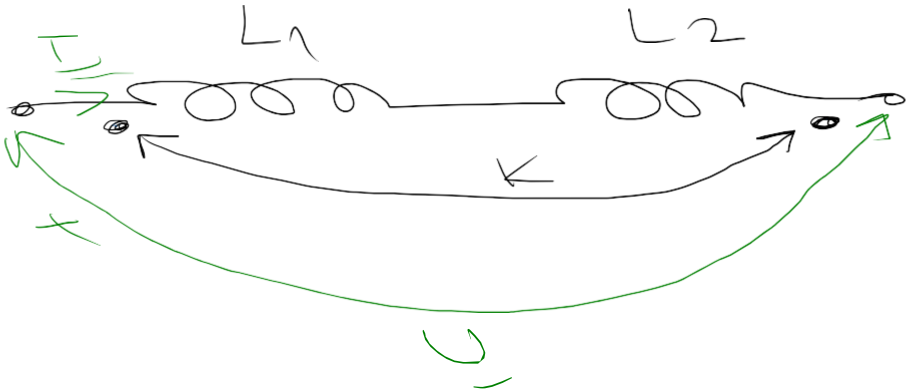

≡

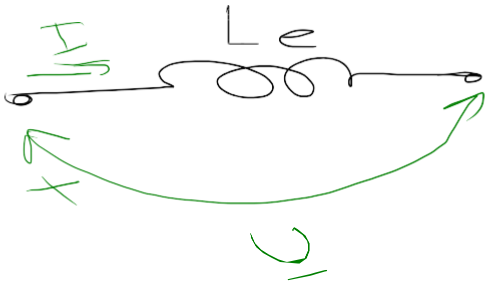

$$\underline{U} = j\omega L_e \cdot \underline{I}$$

$$\underline{U} = j\omega L_1 \underline{I} - j\omega L_{12} \underline{I} + j\omega L_2 \underline{I} - j\omega L_{12} \underline{I}$$

$$\underline{U} = j\omega (L_1 + L_2 - 2L_{12}) \underline{I}$$

$$\Rightarrow L_e = L_1 + L_2 - 2L_{12}$$

$$L_e = L_1 + L_2 - 2 \cdot (\pm k\sqrt{L_1 L_2})$$

→ знакот од коренот означу апсолутна вред- кога сме [illegible]

$$\boxed{L_e = L_1 + L_2 - 2k\sqrt{L_1 L_2}}$$

ИДЕАЛНИ ТРАНСФОРМАТОР

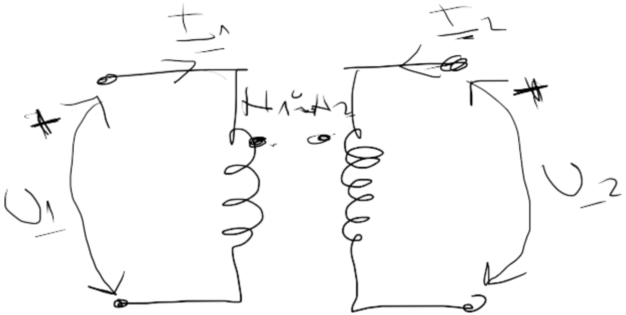
$\underline{I}_1$
$\underline{I}_2$
$N_1 : N_2$
*
*
$\underline{U}_1$
$\underline{U}_2$

$$\boxed{\frac{\underline{U}_1}{\underline{U}_2} = \oplus \frac{N_1}{N_2}}$$

$$\boxed{\frac{\underline{I}_1}{\underline{I}_2} = \ominus \frac{N_2}{N_1}}$$

$$\sum_{alg} N\underline{I} = 0$$

(„+" ако струја улази у маркер)

$$N_1\underline{I}_1 + N_2\underline{I}_2 = 0$$

$$N_1\underline{I}_1 = -N_2\underline{I}_2$$

$$\frac{\underline{I}_1}{\underline{I}_2} = -\frac{N_2}{N_1}$$

$N_1 : N_2$ $\quad 1 : N_2$

$\frac{N_1}{N_2} : 1$

$m : 1$

преносни број (однос)

Идеални трансформатор затворен Z_p на секундару

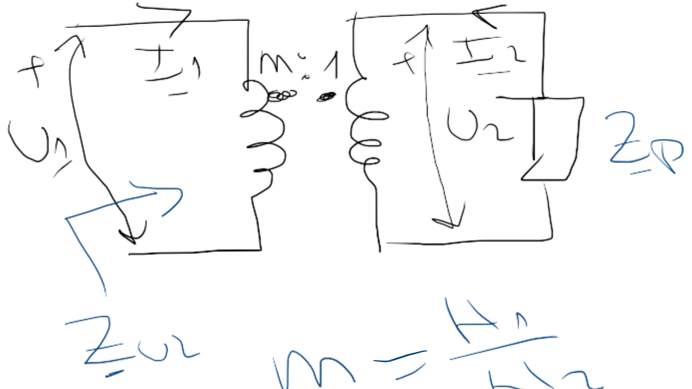

$m = \frac{N_1}{N_2}$

$$Z_{UL} = \frac{U_1}{I_1} = \frac{mU_2}{-\frac{1}{m}I_2} = -m^2\frac{U_2}{I_2}$$

$$Z_{UL} = -m^2\frac{-\cancel{I_2}\cdot Z_p}{\cancel{I_2}} = m^2 Z_p$$

$$\boxed{Z_{UL} = m^2 Z_p}$$

$$Z_p = R \rightarrow Z_{UL} = m^2 R$$

$$Z_p = \frac{1}{j\omega C} \rightarrow Z_{UL} = \frac{m^2}{j\omega C} = \frac{1}{j\omega \frac{C}{m^2}}$$

$$Z_p = j\omega L \rightarrow Z_{UL} = j\omega \boxed{m^2 L}$$

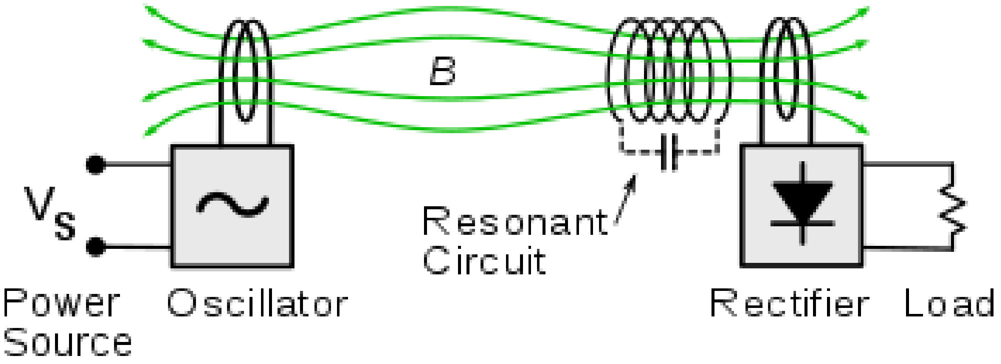
B
V_S
Power Source
Oscillator
Resonant Circuit
Rectifier
Load

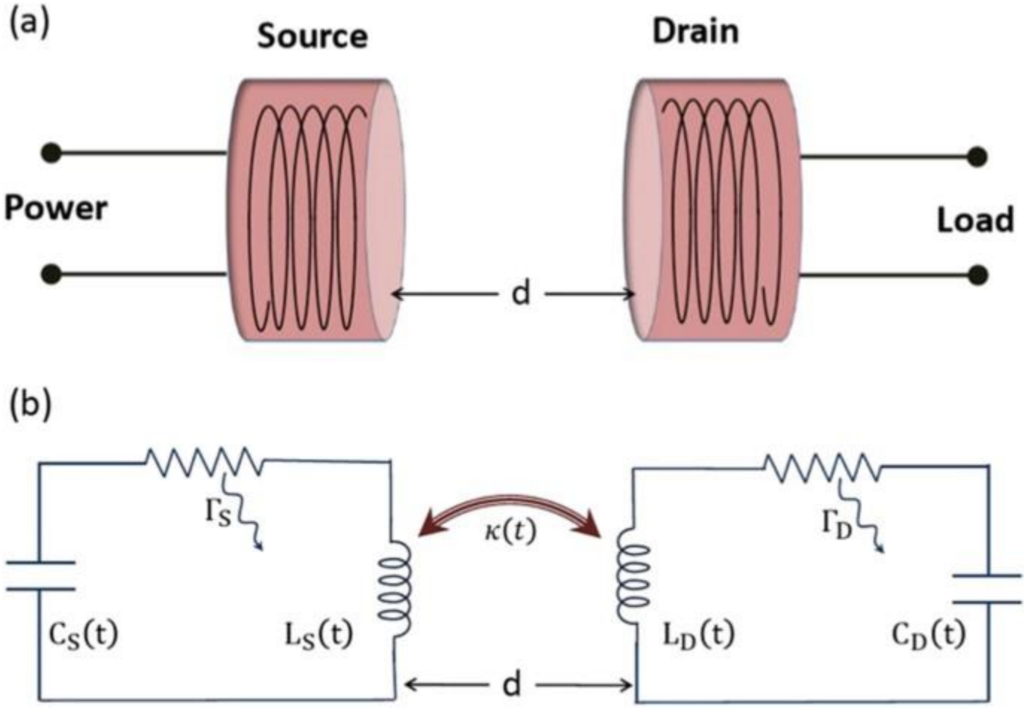
(a)
Source
Drain
Power
Load
d
(b)
Γ_S
$C_S(t)$
$L_S(t)$
$\kappa(t)$
d
Γ_D
$L_D(t)$
$C_D(t)$

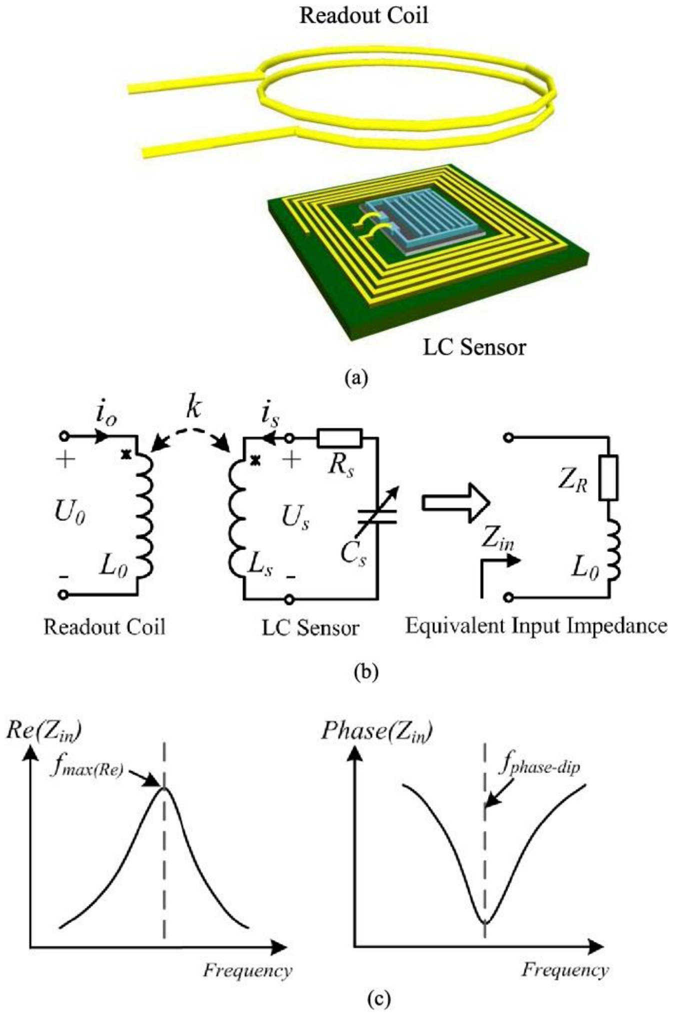
Readout Coil
LC Sensor
(a)
i_o
k
i_s
U_0
L_0
U_s
R_s
C_s
L_s
Z_R
Z_{in}
L_0
Readout Coil
LC Sensor
Equivalent Input Impedance
(b)
$Re(Z_{in})$
$f_{max(Re)}$
Frequency
$Phase(Z_{in})$
$f_{phase\text{-}dip}$
Frequency
(c)