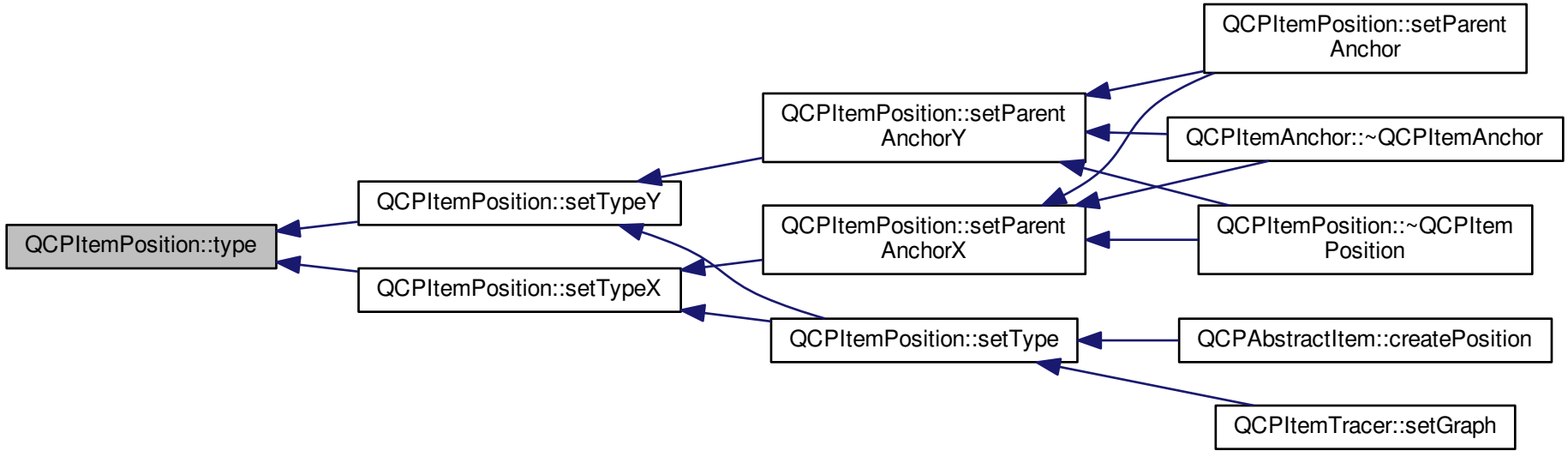
QCPItemPosition::type
QCPItemPosition::setTypeY
QCPItemPosition::setTypeX
QCPItemPosition::setParent AnchorY
QCPItemPosition::setParent AnchorX
QCPItemPosition::setType
QCPItemPosition::setParent Anchor
QCPItemAnchor::~QCPItemAnchor
QCPItemPosition::~QCPItem Position
QCPAbstractItem::createPosition
QCPItemTracer::setGraph