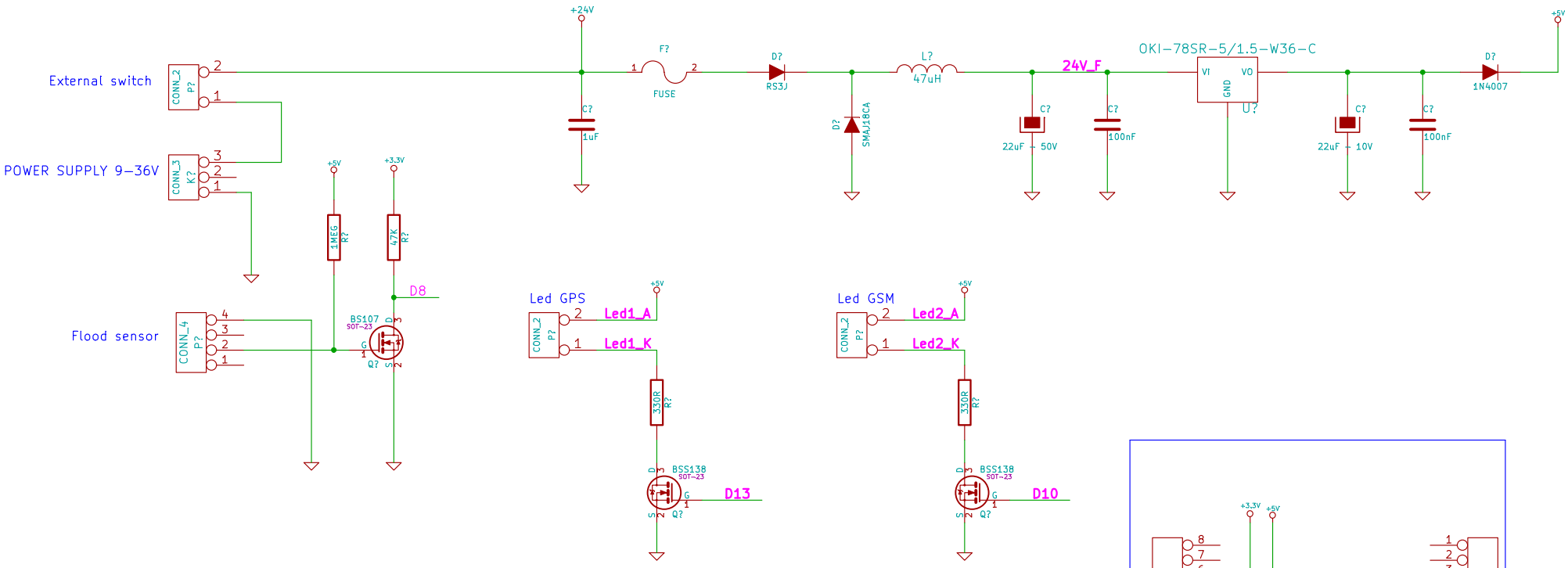

Analog input : Vref is 5V

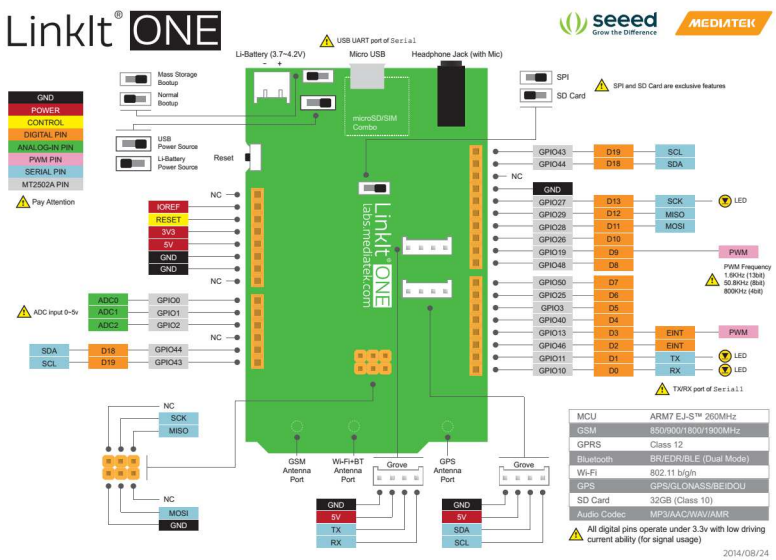

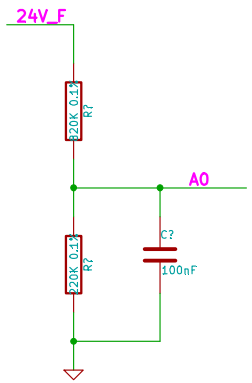

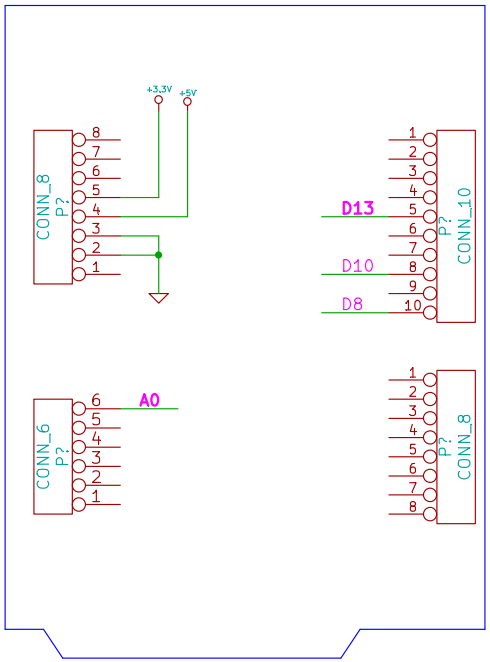

File: shield_robomowtrack.sch		
Sheet: /		
Title:		
Size: A4	Date: 10 mar 2015	**Rev:**
KiCad E.D.A. eeschema (2013-05-31 BZR 4019)-stable		Id: 1/1