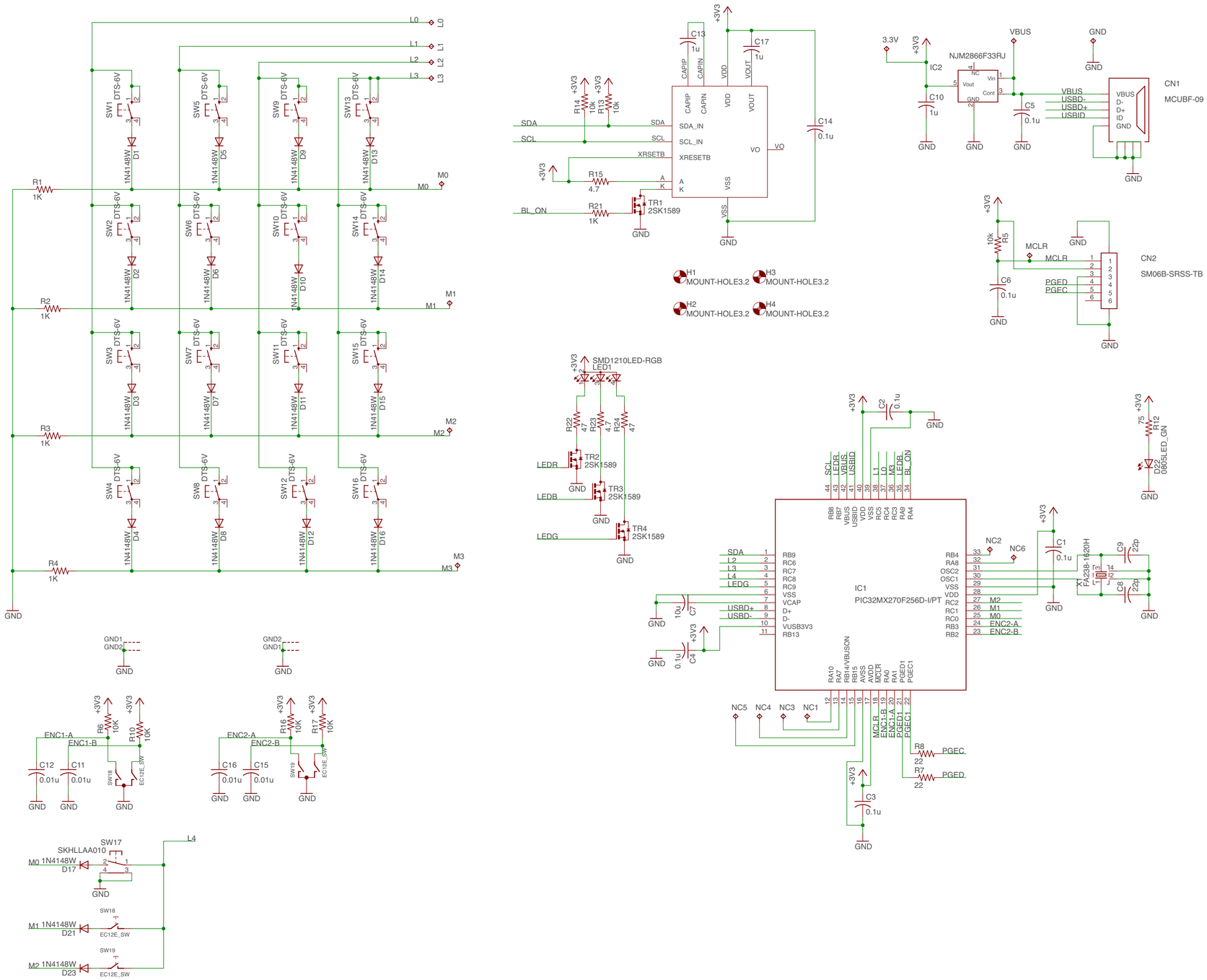
L0
L1
L2
L3
M0
M1
M2
M3
R1 1K
R2 1K
R3 1K
R4 1K
SW1 DTS-6V
SW2 DTS-6V
SW3 DTS-6V
SW4 DTS-6V
SW5 DTS-6V
SW6 DTS-6V
SW7 DTS-6V
SW8 DTS-6V
SW9 DTS-6V
SW10 DTS-6V
SW11 DTS-6V
SW12 DTS-6V
SW13 DTS-6V
SW14 DTS-6V
SW15 DTS-6V
SW16 DTS-6V
1N4148W D1
1N4148W D2
1N4148W D3
1N4148W D4
1N4148W D5
1N4148W D6
1N4148W D7
1N4148W D8
1N4148W D9
1N4148W D10
1N4148W D11
1N4148W D12
1N4148W D13
1N4148W D14
1N4148W D15
1N4148W D16
GND
+3V3
C13 1u
C17 1u
C14 0.1u
CAPIP
CAPIN
VDD
VOUT
SDA_IN
SCL_IN
XRESETB
VO
VSS
SDA
SCL
BL_ON
R11 10k
R13 10k
R15 4.7
R21 1K
TR1 2SK1589
H1 MOUNT-HOLE3.2
H2 MOUNT-HOLE3.2
H3 MOUNT-HOLE3.2
H4 MOUNT-HOLE3.2
3.3V
IC2
NJM2866F33RJ
Vout
Vin
Cont
C10 1u
C5 0.1u
VBUS
USBD-
USBD+
USBID
CN1
MCUBF-09
R5 10k
MCLR
C6 0.1u
PGED
PGEC
CN2
SM06B-SRSS-TB
SMD1210LED-RGB
LED1
R22 47
R23 4.7
R24 47
LEDR
LEDB
LEDG
TR2 2SK1589
TR3 2SK1589
TR4 2SK1589
C2 0.1u
R12 75
D22 0805LED_GN
IC1
PIC32MX270F256D-I/PT
RB9
RC6
RC7
RC8
RC9
VSS
VCAP
D+
D-
VUSB3V3
RB13
RB4
RA8
OSC2
OSC1
VSS
VDD
RC2
RC1
RC0
RB3
RB2
M2
M1
M0
ENC2-A
ENC2-B
NC2
NC6
C1 0.1u
X1 FA238-16.20H
C9 22p
C8 22p
C7 10u
C4 0.1u
NC5
NC4
NC3
NC1
R8 22
R7 22
C3 0.1u
GND1
GND2
R6 10K
R10 10K
ENC1-A
ENC1-B
C12 0.01u
C11 0.01u
SW18
EC12E_SW
R16 10K
R17 10K
C16 0.01u
C15 0.01u
SW19
SW17
SKHLLAA010
D17 1N4148W
D21 1N4148W
D23 1N4148W
L4