DSP in VLSI
Homework 4 - CORDIC

Jen-Tse Chen

April 2026

1. (Step 1) Please draw the figure showing $S(N)$ versus N for $N = 1 \ldots 30$. (5%)

   Figure 1 shows the CORDIC scaling factor $S(N) = \prod_{i=0}^{N-1} \frac{1}{\sqrt{1+2^{-2i}}}$ versus the number of micro-rotations N. The factor decreases rapidly and converges to approximately 0.6073 by $N \approx 5$, remaining constant thereafter.

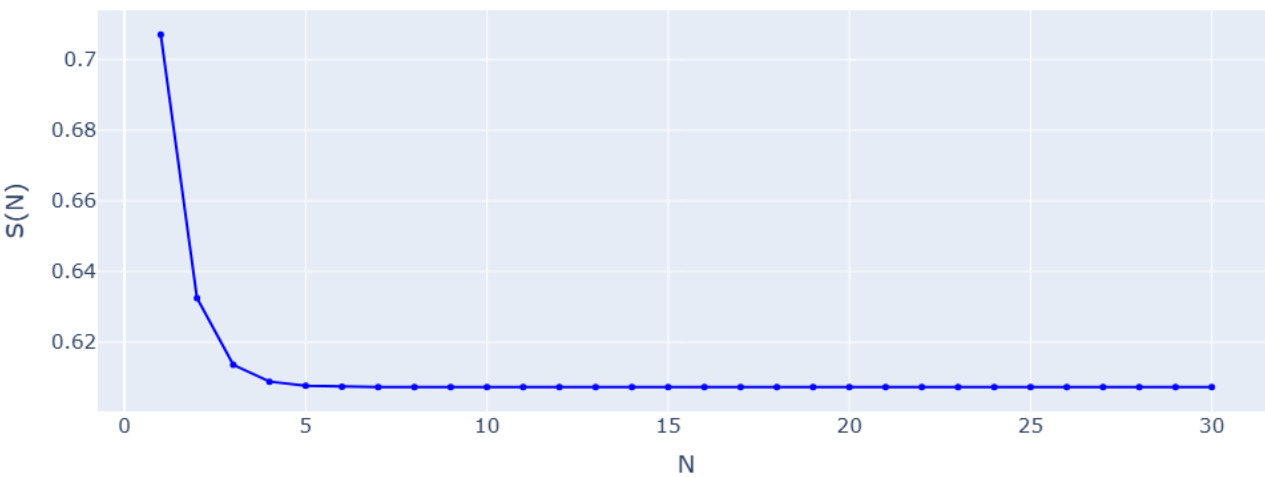

Figure 1: CORDIC scaling factor $S(N)$ versus N

2. (Step 2) Draw the figure of average absolute error versus fractional wordlength (10%) to show how you determine the setting of word-length of the fractional part. Write down the integer word-length of $X(i)$ and $Y(i)$ that you use all the stages. Please explain it. (5%)

   Figure 2 plots the average absolute phase error against the fractional wordlength w with $N = 30$ micro-rotations. The error decreases monotonically and falls below the 2^{-9} criterion at $w = 9$, after which further increase yields negligible improvement for the phase function. However, the magnitude function analysis in Step 4 shows that 9 fractional bits cause accumulated truncation error to violate the 0.1% magnitude criterion across most micro-rotation counts. Therefore, the fractional wordlength of the X and Y datapath is set to $w = 12$ bits to satisfy both the phase and magnitude requirements.

   Each CORDIC micro-rotation is a pseudo-rotation that does not preserve the vector magnitude; the amplitude grows by a factor of $1/S(N)$. For unit-circle inputs ($\sqrt{X_0^2 + Y_0^2} = 1$) the maximum value reached by either register throughout all N stages is bounded by

$$\max_i \sqrt{X(i)^2 + Y(i)^2} \;=\; \frac{1}{S(N)} \;\approx\; 1.647 \;<\; 2^1.$$

   Since the pseudo-magnitude never reaches 2, one integer bit suffices for all stages. Combined with the sign bit, the complete word format is 1 sign + 1 integer + 12 fractional = 14 bits.

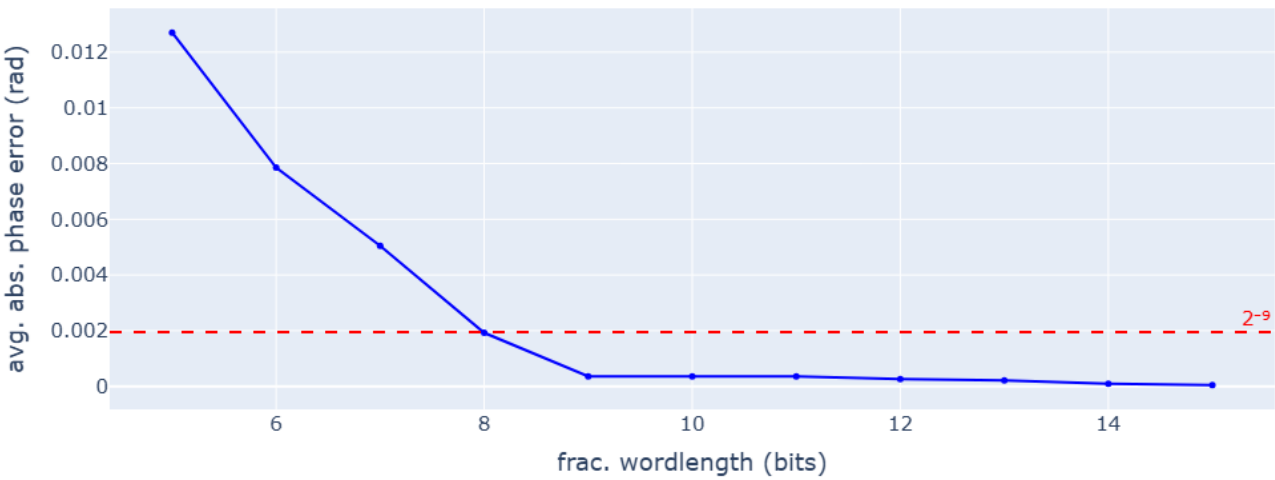

Figure 2: Average absolute phase error versus fractional wordlength w of $X(i)$ and $Y(i)$ ($N = 30$, floating-point θ)

3. (Step 3) Please draw a figure to denote the average phase errors of 10 quantized input pairs (X, Y) versus different numbers of micro-rotations S (10%) and draw a figure to show the resulted phase errors of 10 quantized input pairs versus the word-length of quantized elementary angles (10%). Explain your selection to satisfy the averaged error criterion of 2^{-9} radian. Also list a table of the elementary angles (both in floating-point representation and binary fixed-point representation). (5%)

   Figure 3 shows the average absolute phase error versus the number of micro-rotations N, with the X and Y fractional wordlength fixed at 12 bits. The error decreases as N increases and first falls below the 2^{-9} criterion at $N = 10$. Therefore, the number of micro-rotations is set to $N = 10$.

   Figure 4 shows the average absolute phase error versus the fractional wordlength of the quantized elementary angles, with $N = 10$ micro-rotations and X and Y fractional wordlength fixed at 12 bits. The error decreases with increasing wordlength, meets the 2^{-9} criterion at 10 bits, and saturates beyond that point because the dominant error source shifts to the X and Y quantization. Therefore, the fractional wordlength of the elementary angle LUT is set to 10 bits.

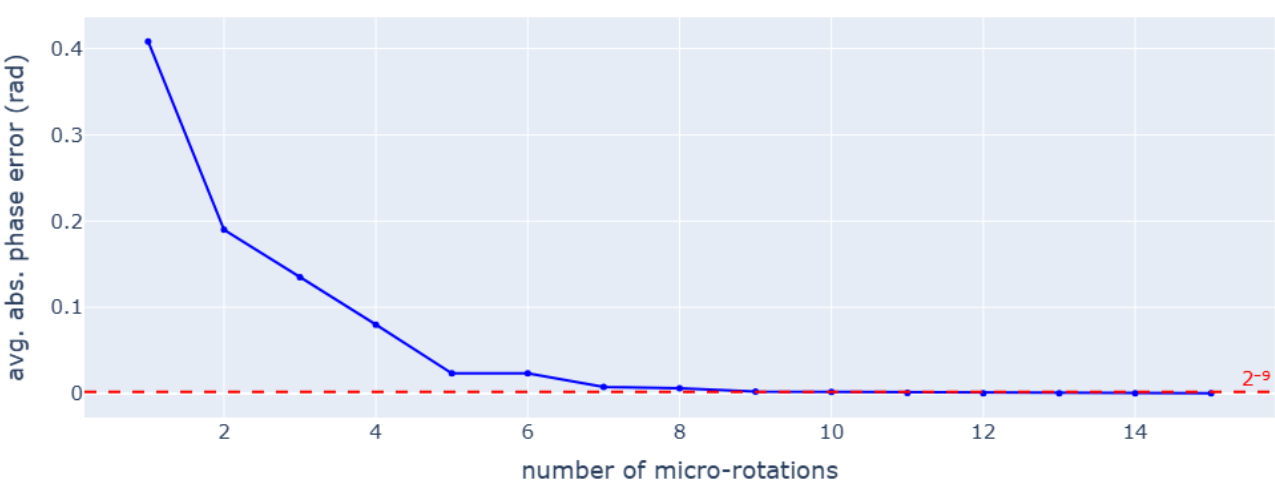

Figure 3: Average absolute phase error versus number of micro-rotations N (fractional wordlength of X and Y = 12 bits, floating-point elementary angles)

The 10 elementary angles used in the CORDIC micro-rotations are listed in Table 1.

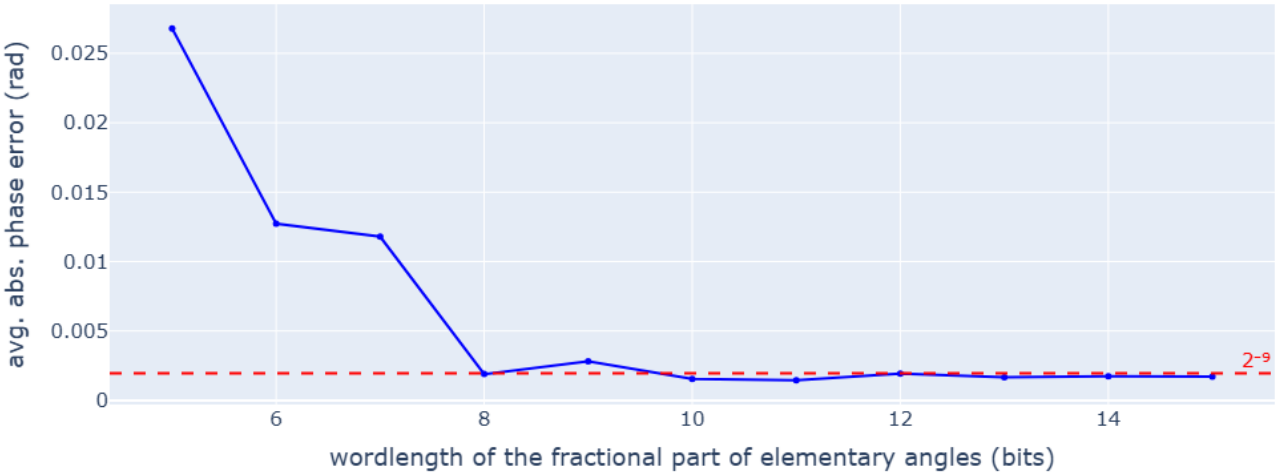

Figure 4: Average absolute phase error versus fractional wordlength of quantized elementary angles ($N = 10$, fractional wordlength of X and $Y = 12$ bits)

i	$\theta_e(i) = \arctan(2^{-i})$ (rad)	Binary fixed-point (10 frac. bits)
0	0.7853981634	`0.1100100100`
1	0.4636476090	`0.0111011011`
2	0.2449786631	`0.0011111011`
3	0.1243549945	`0.0001111111`
4	0.0624188100	`0.0001000000`
5	0.0312398334	`0.0000100000`
6	0.0156237286	`0.0000010000`
7	0.0078123411	`0.0000001000`
8	0.0039062301	`0.0000000100`
9	0.0019531225	`0.0000000010`

Table 1: Elementary angles $\theta_e(i)$ in floating-point and 10-bit fixed-point binary representation

4. (Step 4) Please show how you decide the number of micro-rotations for the magnitude function with error tolerance of 0.1%. (10%)

   Figure 5 shows the average relative magnitude error versus the number of micro-rotations N, with the X and Y fractional wordlength set to 12 bits (as determined in Step 2). The 0.1% criterion is satisfied for $N \geq 5$. Combining with the conclusion from Step 3, the number of micro-rotations is kept at $N = 10$.

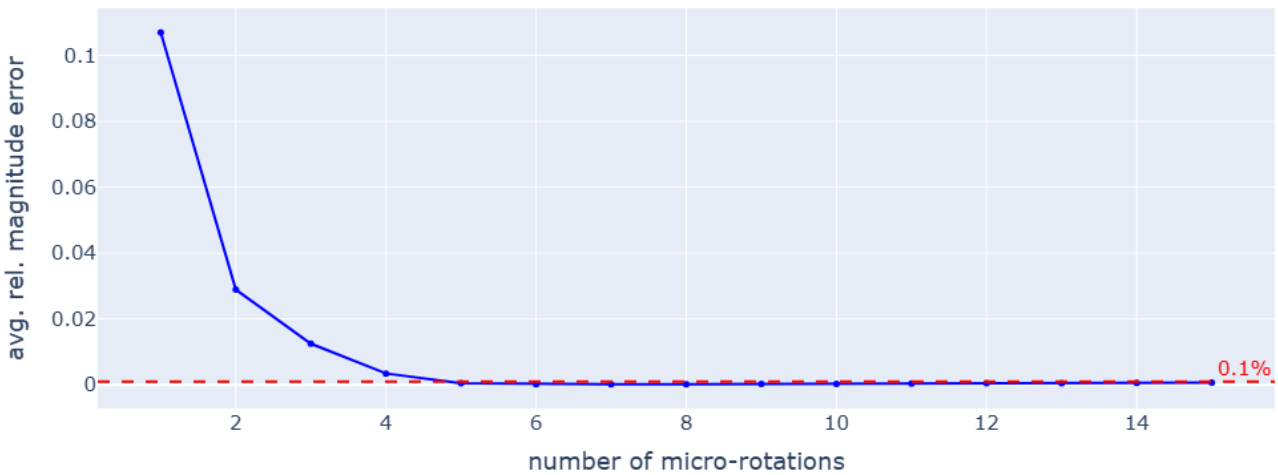

Figure 5: Average relative magnitude error versus number of micro-rotations N (fractional wordlength of X and Y = 12 bits)

5. (Step 5) Write a program to show the setting of fractional wordlength of CSD versus error. Draw the figure. (10%) Depict your design for the shift-and-add block according to your CSD representation. How many adders do you use? (10%)

   Figure 6 shows the average relative magnitude error versus the fractional wordlength of the CSD representation of $S(N)$, with $N = 10$ and X and Y fractional wordlength fixed at 12 bits. The 0.1% criterion is first satisfied at a fractional wordlength of 9 bits. Therefore, the CSD scaling factor is quantised to 9 fractional bits.

   At 9 fractional bits, $S(10) \approx (-2^0 - 2^3 + 2^6 + 2^8)/512$. With 4 non-zero CSD digits the multiplication requires 3 adders.

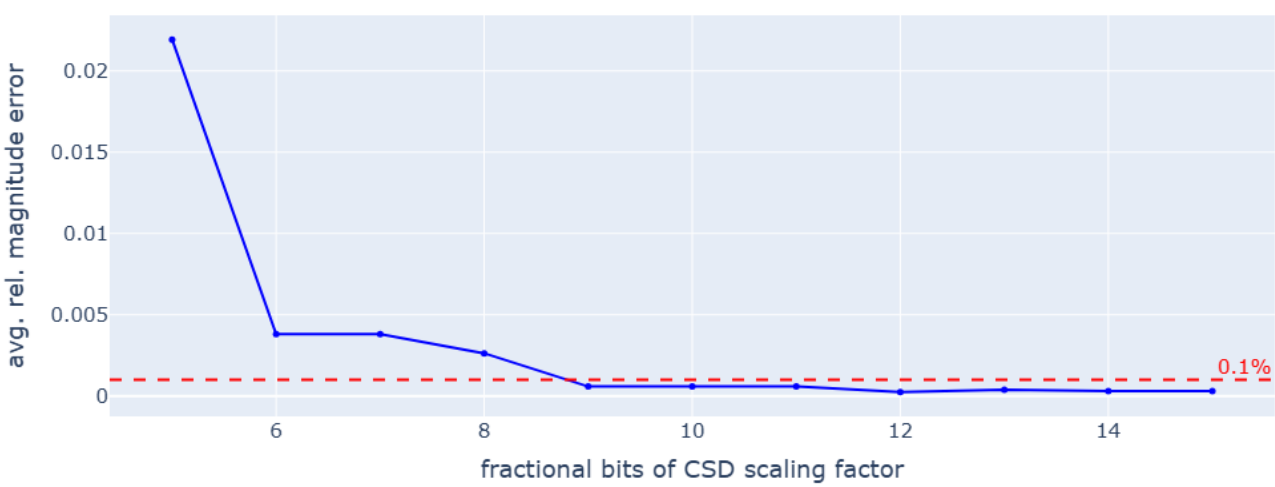

Figure 6: Average relative magnitude error versus fractional wordlength of the CSD scaling factor $S(10)$ ($N = 10$, fractional wordlength of X and Y = 12 bits)

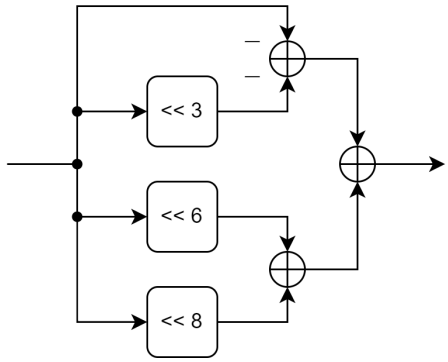

Figure 7: Shift-and-add block diagram for the CSD scaling factor $S(10)$

6. (Step 6) Depict your design of the initial stage. Mark the word-length in the block diagram. (10%)

   Figure 8 shows the block diagram of the initial stage. The initial stage maps the complex input into the right half plane before the CORDIC iterations begin; the offset shifts back to the original quadrant after the CORDIC iterations.

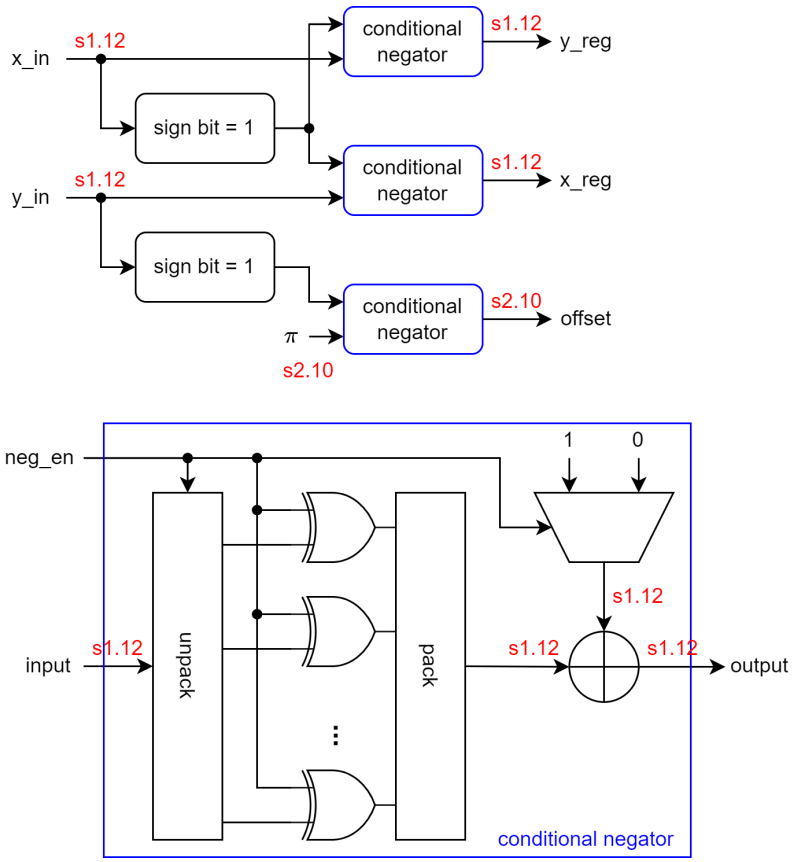

Figure 8: Block diagram of the initial stage with word-lengths marked

7. (Step 6) Implement your design with only DFFs inserted at the inputs and outputs. Show the timing diagram of behavior simulation for four inputs. (15%) Compare the results with the arctangent function and draw the error versus index m to show that your implementation meets the precision requirements of error less than 2^{-9}. (10%)

Figure 9: Timing diagram of behavior simulation for four inputs

Figure 10: Phase error versus index m for iterative architecture (behavior simulation)

8. (Step 7) Draw the block diagram of your $\frac{S}{2}$-unfolding architecture. (10%) Show the timing diagram of behavior and post-synthesis simulation with correct setting of clock period and 10 inputs. (30%) Verified the error between the post-synthesis results and the floating-point arctangent results. Draw the error versus index m. (10%)

Figure 11: Block diagram of the $\frac{S}{2}$-unfolding architecture

Figure 12: Timing diagram of behavior simulation with 10 inputs

Figure 13: Timing diagram of post-synthesis simulation with 10 inputs

Figure 14: Phase error versus index m for $\frac{S}{2}$-unfolding architecture (post-synthesis)

9. (Step 8) Report and compare the area before and after unfolding. (10%)

10. (Step 9) Draw the shift-and-add module for the scaling factor (5%). Connect the shift-and-add module to your micro-rotation module, and calculate the magnitude function. Show the timing diagram of behavior simulation and post-synthesis simulation with proper setting of clock period. (15%) Verified the error between the post-synthesis results and the floating-point arctangent results. Draw the error versus index m. (10%)

Figure 15: Complete magnitude function architecture with shift-and-add scaling

Figure 16: Timing diagram of behavior simulation for magnitude function

Figure 17: Timing diagram of post-synthesis simulation for magnitude function

Figure 18: Magnitude error versus index m (post-synthesis)