DSP in VLSI
Homework 3 - Interpolator

Jen-Tse Chen

April 2026

1. (Step 1) Show the real-part and imaginary-part output waveform $\hat{x}_1[m+\mu]$ after interpolation using linear interpolator and second-order polynomial interpolator to interpolate the sampled waveform in the region of $10 \leq m \leq 20$ with $\mu = 0, \frac{1}{8}, \frac{2}{8}, \ldots \frac{7}{8}$. In addition, draw the absolute error, defined by $|x_1[m+\mu] - \hat{x}_1[m+\mu]|$ in the region of $10 \leq m \leq 20$ with $\mu = 0, \frac{1}{8}, \frac{2}{8}, \ldots \frac{7}{8}$. (30%)

   Figure 1 shows the interpolated waveform and the absolute error of the linear and second-order polynomial interpolators for $x_1[m+\mu]$.

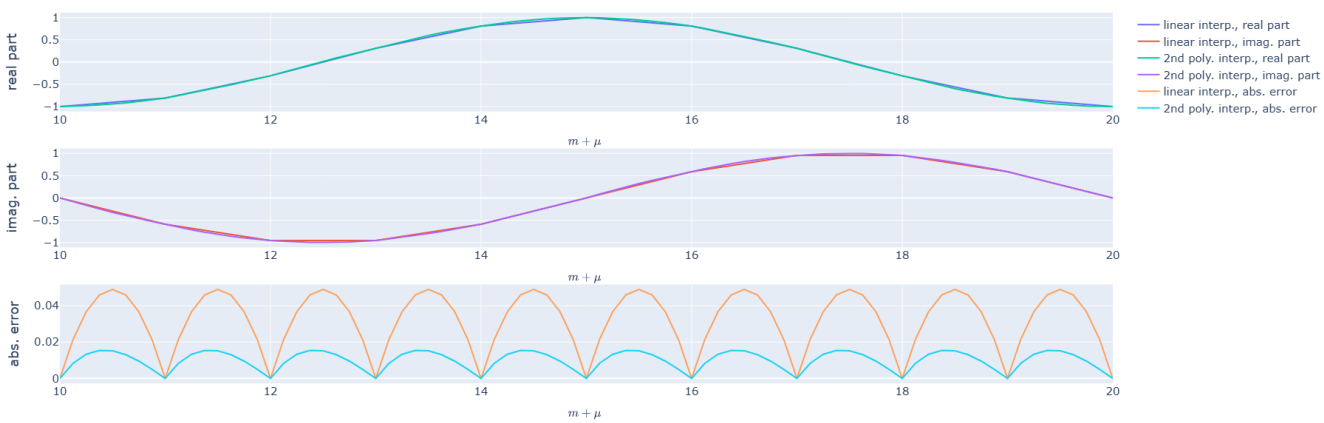

Figure 1: Interpolated waveform and absolute error of $\hat{x}_1[m+\mu]$

2. (Step 2) Show the real-part and imaginary-part output waveform of $\hat{x}_2[m+\mu]$ after interpolation using linear interpolator and piecewise parabolic interpolator to interpolate the sampled waveform in the region of $5 \leq m \leq 10$ with $\mu = 0, \frac{1}{9}, \frac{2}{9}, \ldots \frac{8}{9}$. In addition, draw the absolute error, defined by $|x_2[m+\mu] - \hat{x}_2[m+\mu]|$ in the region of $4 \leq m \leq 8$ with $\mu = 0, \frac{1}{8}, \frac{2}{8}, \ldots \frac{7}{8}$. (30%)

   Figure 2 shows the interpolated waveform and the absolute error of the linear and piecewise parabolic interpolators for $x_2[m+\mu]$.

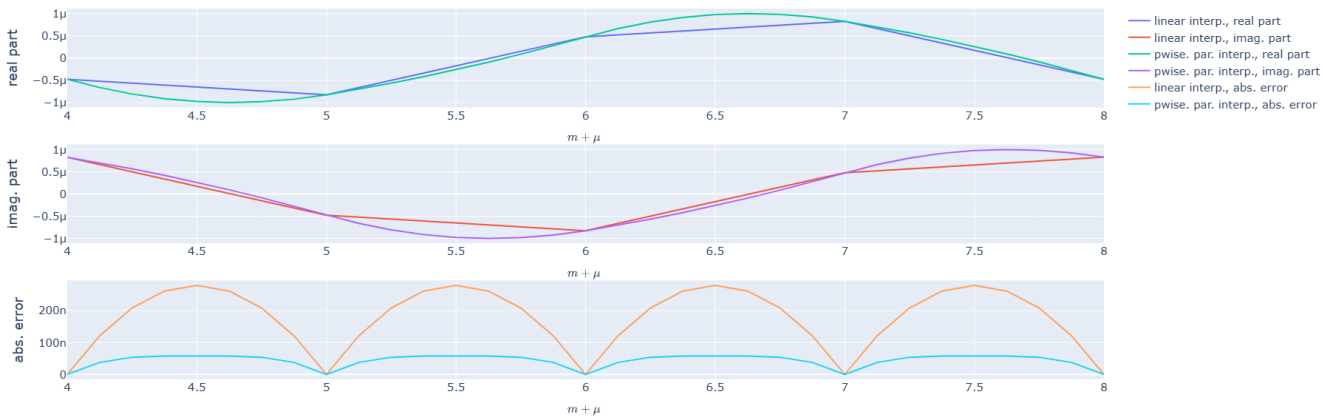

Figure 2: Interpolated waveform and absolute error of $\hat{x}_2[m+\mu]$

3. (Step 3) Please show the results calculated by your BF16 bit-true model for the following operands and operators. Express results both in decimal and binary representation. (S, E, F mean the sign bit, exponent field, and fraction field. All are given in binary.) (20%)

	Operand 1	**Operand 2**	**Operation**	**Result (Binary)**	**Result (Decimal)**
(a)	S: 1 E: 1000_0011 F: 0000_000	S: 0 E: 1000_1011 F: 0000_011	Addition	S: 0 E: 1000_1011 F: 0000_011	4192
(b)	S: 1 E: 0000_0001 F: 0000_011	S: 0 E: 0000_0001 F: 1111_010	Addition	S: 0 E: 0000_0000 F: 0000_000	0
(c)	S: 1 E: 0000_0010 F: 1100_000	S: 0 E: 0111_1100 F: 0000_110	Multiplication	S: 0 E: 0000_0000 F: 0000_000	0
(d)	S: 0 E: 0110_0011 F: 1011_110	S: 0 E: 1001_0011 F: 0101_000	Multiplication	S: 0 E: 0111_1000 F: 0010_001	0.00885009765625

Table 1: BF16 bit-true model computation results

4. (Step 4) Show the interpolation differences of the second-order interpolator using BF16 and double-precision arithmetic operations. Draw the figures indicating the difference of interpolated results caused by data format for outputs $\hat{x}_1[m+\mu]$ in the region of $10 \leq m \leq 20$ with $\mu = 0, \frac{1}{8}, \frac{2}{8}, \ldots \frac{7}{8}$. (10%)

   Figure 3 shows the interpolated waveform of $\hat{x}_1[m+\mu]$ using double-precision and BF16 arithmetic, and the absolute difference between the two results caused by the finite precision of BF16.

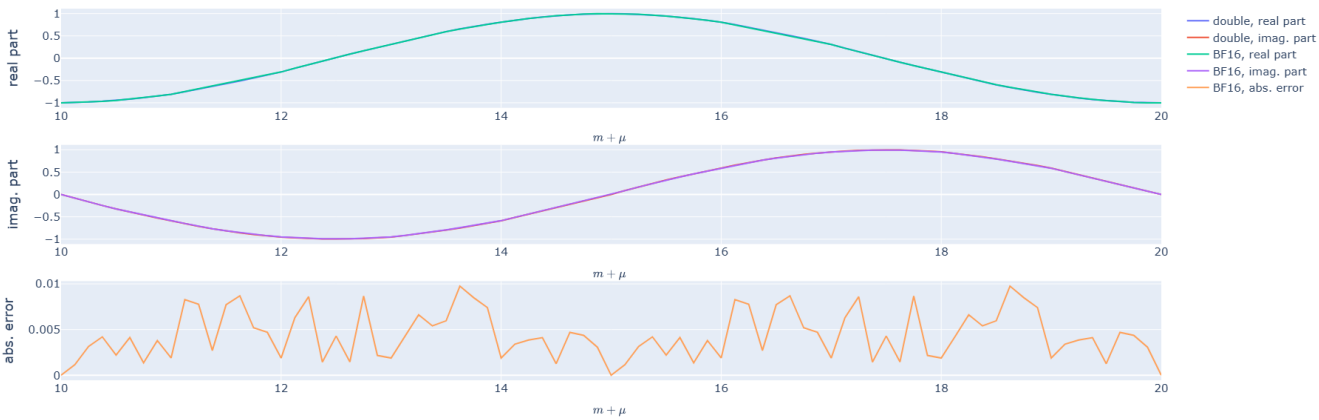

Figure 3: Interpolated waveform and absolute error of $\hat{x}_1[m+\mu]$ between double-precision and BF16

5. (Step 5) Draw the complete block diagram of your first version implementation according to the Farrow structure. (5%) Show your hardware sharing version (the precision of the datapath must be BF16 and cannot be changed). (10%) Draw the block diagram after your improvement. (5%) Indicate the critical path. (5%)

Figure 4 shows the first version block diagram following the Farrow structure. The three input samples $x(m)$, $x(m+1)$, and $x(m+2)$ are stored in two delay registers. The Farrow coefficient sub-filters compute c_0, c_1, and c_2 using constant multipliers (0.5 and 1.5) and adders/subtractors. The output is then evaluated as $\hat{x}[m+\mu] = c_0 + \mu(c_1 + \mu c_2)$ using two BF16 multipliers for μ.

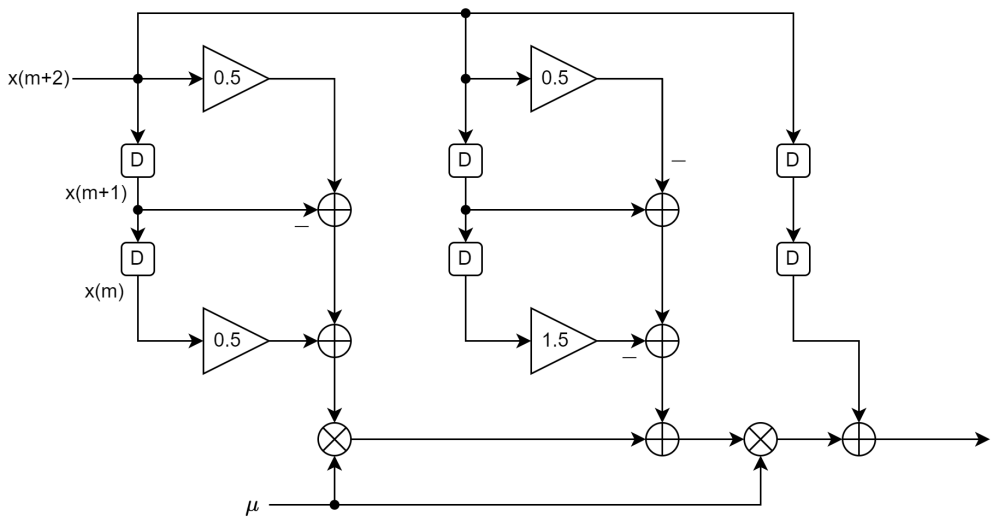

Figure 4: First version block diagram (Farrow structure)

Figure 5 shows the hardware sharing version. By reordering computations, the two separate coefficient paths that share common sub-expressions are merged, reducing the total number of adders. The red path highlights the critical path, which runs from the input registers through the shared adder tree and the two sequential μ multiplications to the output.

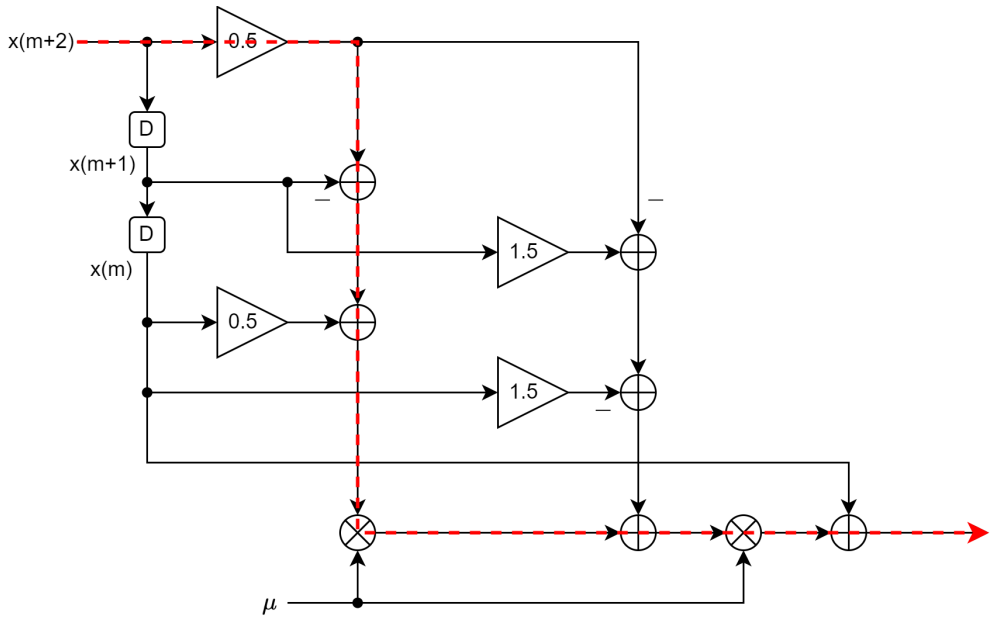

Figure 5: Hardware sharing version block diagram with critical path (red)

6. (Step 6) Write HDL to implement your second-order interpolator using BF16 arithmetic unit of Farrow structure after reduction. The input to be interpolated will change every 8 clock cycles and μ will change every clock cycle. Show the timing diagram of behavior simulation for the first 8 ($\mu = 0, \frac{1}{8}, \frac{2}{8}, \ldots \frac{7}{8}$) and the last 8 ($\mu = 0, \frac{1}{8}, \frac{2}{8}, \ldots \frac{7}{8}$) interpolated outputs of $\hat{x}_1[m+\mu]$ in the region of $10 \leq m \leq 20$. Show the real-part and imaginary-part error compared to double-precision results. (30%)

   Figures 6 and 7 show the timing diagrams for the first and last 8 interpolated outputs of the behavior simulation. Figure 8 shows the real-part and imaginary-part errors between the BF16 and double-precision results.

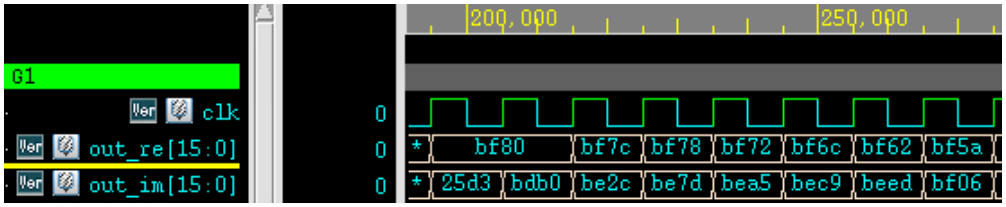

Figure 6: The first 8 output of interpolator

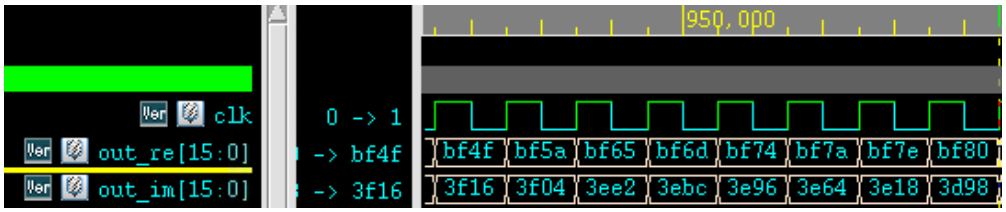

Figure 7: The last 8 output of interpolator

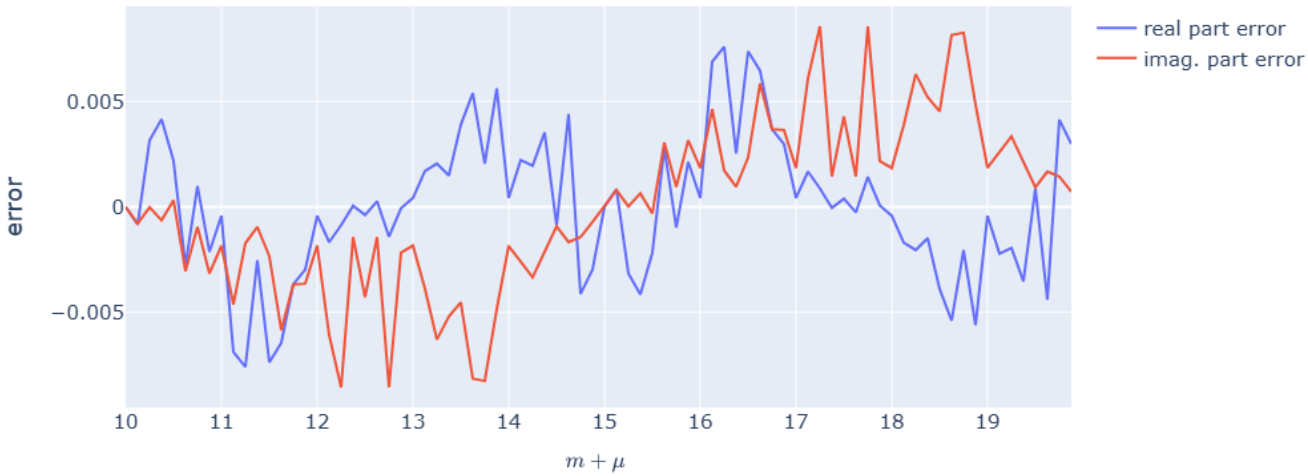

Figure 8: Real-part and imaginary-part error of $\hat{x}_1[m+\mu]$ between double-precision and BF16 in behavior simulation

7. (Step 6) Show your timing report to verify the critical path of your block diagram in Q5. (10%) List your timing constraint for post-synthesis simulation. (5%)

   The design is synthesized with a clock period of 10 ns (100 MHz). Input and output delays are set to 50% of the clock period. Figures 9 and 10 show the timing report after synthesis.

```
Startpoint: sr_re_reg[2][9]
            (rising edge-triggered flip-flop clocked by clk)
Endpoint: out_re_reg[1]
          (rising edge-triggered flip-flop clocked by clk)
Path Group: clk
Path Type: max

Des/Clust/Port     Wire Load Model       Library
------------------------------------------------
poly2_interpolator ZeroWireload          N16ADFP_StdCellff0p88v125c_ccs

Point                                              Incr       Path
-----------------------------------------------------------------------
clock clk (rise edge)                              0.00       0.00
clock network delay (ideal)                        0.50       0.50
sr_re_reg[2][9]/CP (DFCNQD1BWP20P90)               0.00       0.50 r
sr_re_reg[2][9]/Q (DFCNQD1BWP20P90)                0.05       0.55 r
U2768/ZN (INVD1BWP20P90)                           0.02       0.57 f
U2769/ZN (ND2D1BWP20P90)                           0.01       0.58 r
U2771/ZN (INR2D1BWP20P90)                          0.01       0.59 f
U2795/ZN (ND2D1BWP20P90)                           0.01       0.60 r
U2798/ZN (ND2D1BWP20P90)                           0.02       0.62 f
U2802/ZN (ND2D1BWP20P90)                           0.01       0.64 r
U2808/ZN (ND2D1BWP20P90)                           0.10       0.74 f
U2809/ZN (ND2D1BWP20P90)                           0.02       0.76 r
U2810/ZN (ND2D1BWP20P90)                           0.01       0.77 f
U2811/ZN (OAOI211D1BWP16P90)                       0.11       0.88 r
U2812/ZN (INVD1BWP20P90)                           0.08       0.95 f
U2852/Z (AO21D1BWP20P90)                           0.04       0.99 f
U8350/Z (OR2D1BWP20P90)                            0.02       1.01 f
U8713/CO (FA1D1BWP20P90)                           0.03       1.03 f
DP_OP_32J1_150_9763/U7/CO (FA1D1BWP20P90)          0.03       1.06 f
DP_OP_32J1_150_9763/U6/CO (FA1D1BWP20P90)          0.03       1.09 f
DP_OP_32J1_150_9763/U5/CO (FA1D1BWP20P90)          0.03       1.11 f
DP_OP_32J1_150_9763/U4/CO (FA1D1BWP20P90)          0.03       1.14 f
DP_OP_32J1_150_9763/U3/CO (FA1D1BWP20P90)          0.02       1.17 f
U2842/Z (XOR2D1BWP20P90)                           0.02       1.19 f
U2845/ZN (IND2D1BWP20P90)                          0.02       1.21 f
U2846/ZN (INR2D1BWP20P90)                          0.02       1.22 r
U2847/ZN (ND2D1BWP20P90)                           0.01       1.23 f
U2848/ZN (NR2D1BWP20P90)                           0.02       1.26 r
```

Figure 9: Timing report (start)

```
U5320/ZN (AOI21D1BWP20P90)                      0.02       6.65 r
U5321/ZN (NR2D1BWP20P90)                        0.01       6.66 f
U5322/ZN (INVD1BWP20P90)                        0.01       6.67 r
U5323/ZN (NR2D1BWP20P90)                        0.01       6.68 f
U5324/ZN (INVD1BWP20P90)                        0.01       6.69 r
U5326/ZN (AOI21D1BWP20P90)                      0.01       6.71 f
U5329/ZN (OAI21D1BWP20P90)                      0.02       6.72 r
U5330/Z (OR2D1BWP20P90)                         0.02       6.74 r
U5335/Z (OA21D1BWP20P90)                        0.02       6.75 r
U5336/ZN (ND2D1BWP20P90)                        0.01       6.76 f
U5350/ZN (ND2D1BWP20P90)                        0.01       6.78 r
U5359/ZN (IND2D1BWP20P90)                       0.01       6.79 f
U5371/ZN (INR3D1BWP20P90)                       0.01       6.80 f
U5375/ZN (AOI211D1BWP20P90)                     0.02       6.82 r
U5376/ZN (OAI21D1BWP20P90)                      0.06       6.88 f
U5408/ZN (OAI32D1BWP20P90)                      0.03       6.91 r
out_re_reg[1]/D (DFCNQD1BWP20P90)               0.00       6.91 r
data arrival time                                          6.91

clock clk (rise edge)                          10.00      10.00
clock network delay (ideal)                     0.50      10.50
clock uncertainty                              -0.10      10.40
out_re_reg[1]/CP (DFCNQD1BWP20P90)              0.00      10.40 r
library setup time                             -0.02      10.38
data required time                                        10.38
-------------------------------------------------------------------
data required time                                        10.38
data arrival time                                         -6.91
-------------------------------------------------------------------
slack (MET)                                                3.47
```

Figure 10: Timing report (end)

8. (Step 6) Show the timing diagram of post-synthesis simulation for the first 8 ($\mu = 0, \frac{1}{8}, \frac{2}{8}, \ldots \frac{7}{8}$) and the last 8 ($\mu = 0, \frac{1}{8}, \frac{2}{8}, \ldots \frac{7}{8}$) interpolated outputs of $\hat{x}_1[m+\mu]$ in the region of $10 \leq m \leq 20$ with $\mu = 0, \frac{1}{8}, \frac{2}{8}, \ldots \frac{7}{8}$. Show the real-part and imaginary-part error compared to double-precision results. (20%)

   Figures 11 and 12 show the timing diagrams for the first and last 8 interpolated outputs of the post-synthesis simulation. Figure 13 shows the real-part and imaginary-part errors between the BF16 and double-precision results, which are identical to the behavior simulation results.

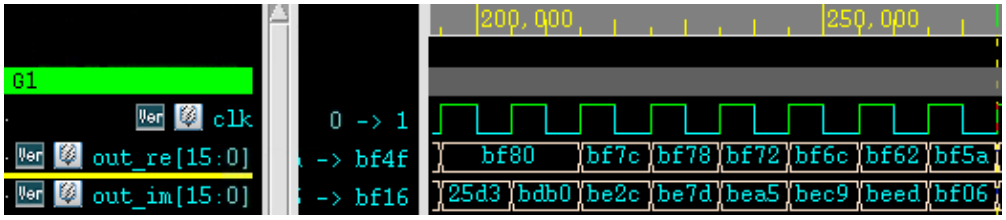

Figure 11: The first 8 output of interpolator (post-synthesis)

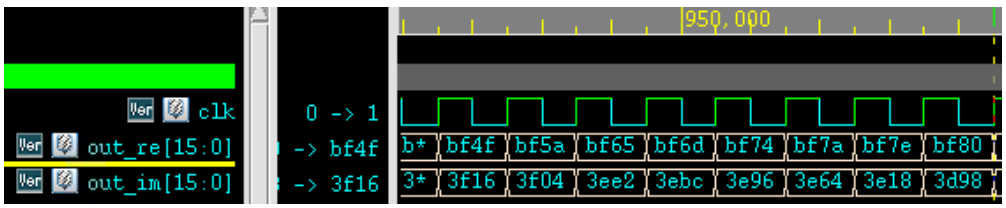

Figure 12: The last 8 output of interpolator (post-synthesis)

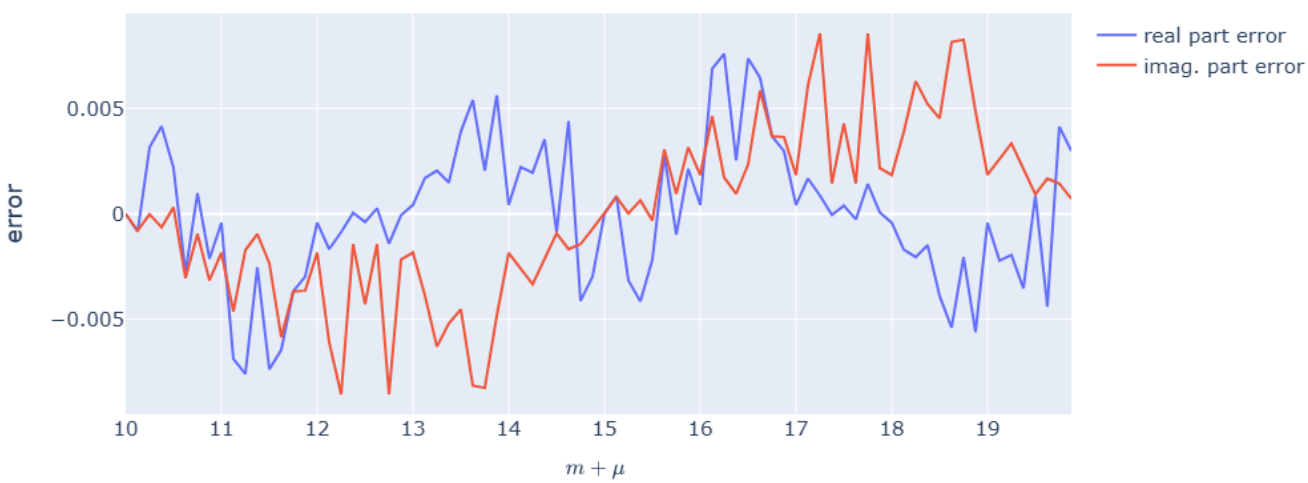

Figure 13: Real-part and imaginary-part error of $\hat{x}_1[m+\mu]$ between double-precision and BF16 in post-synthesis simulation

9. (Step 6) Construct your BF16 bit-true model as the architecture after your improvement. Depict the real-part and imaginary-part errors of interpolated outputs of $\hat{x}_1[m+\mu]$ between the Verilog outputs and the bit-true model in the region of $10 \leq m \leq 20$ with $\mu = 0, \frac{1}{8}, \frac{2}{8}, \ldots \frac{7}{8}$. (20%)

   The Verilog outputs match the BF16 bit-true model exactly, so the errors are all zero as shown in Figure 14.

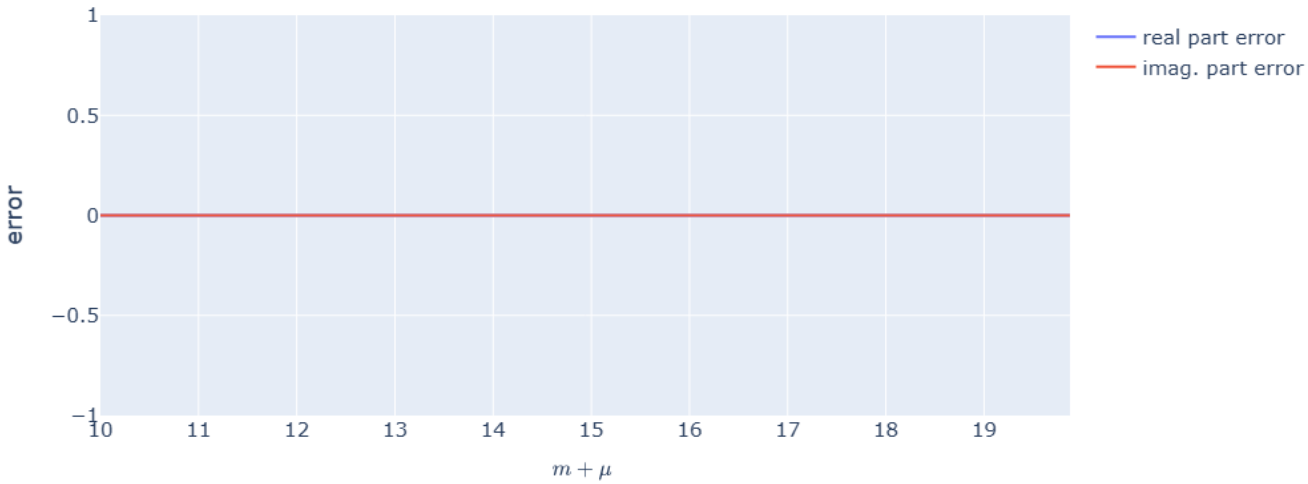

Figure 14: Real-part and imaginary-part error between Verilog outputs and BF16 bit-true model