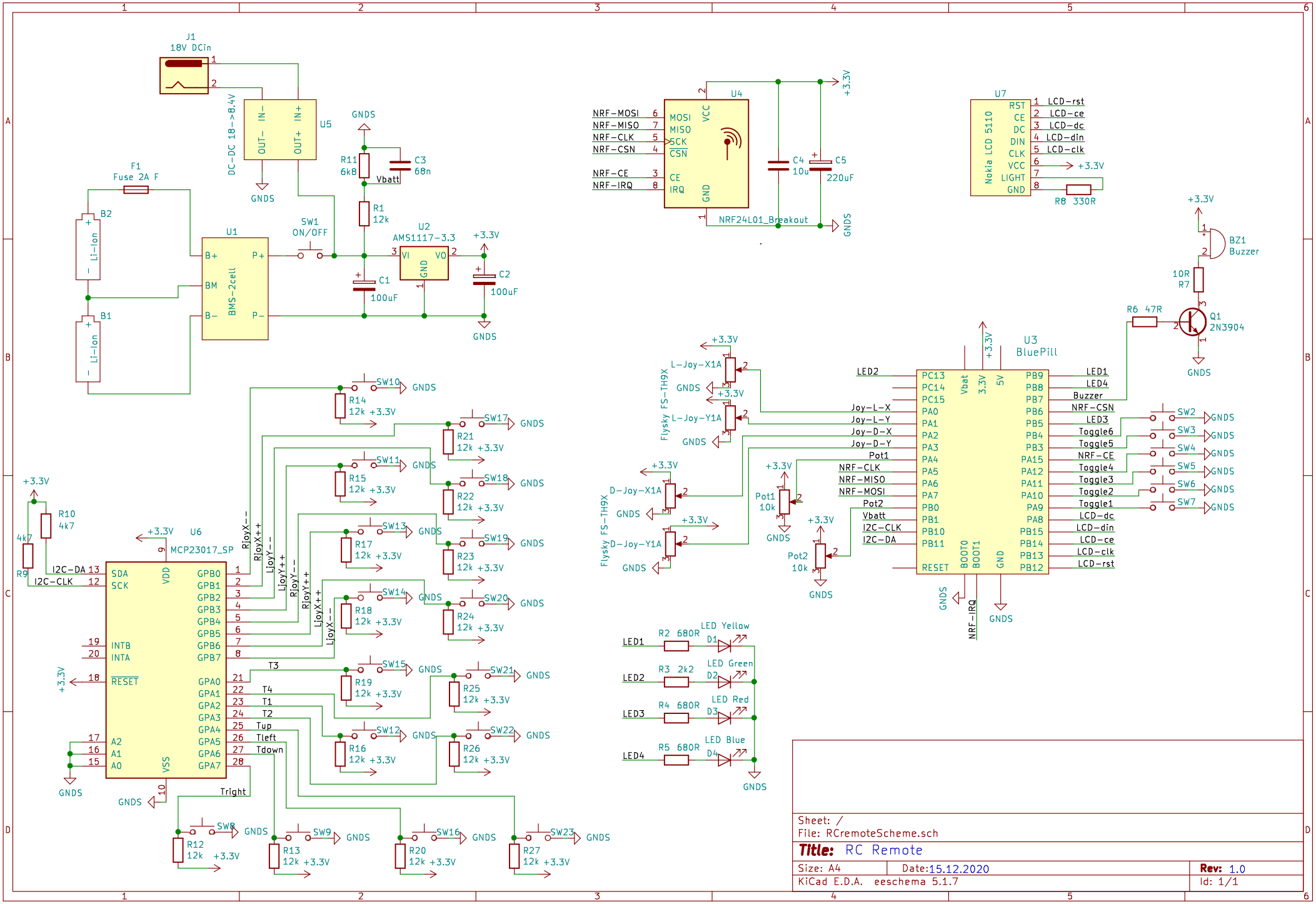

Sheet: /
File: RCremoteScheme.sch

Title: RC Remote

Size: A4	Date: 15.12.2020	Rev: 1.0
KiCad E.D.A. eeschema 5.1.7		Id: 1/1