MAMUDA

4 WAREHOUSES - KANO

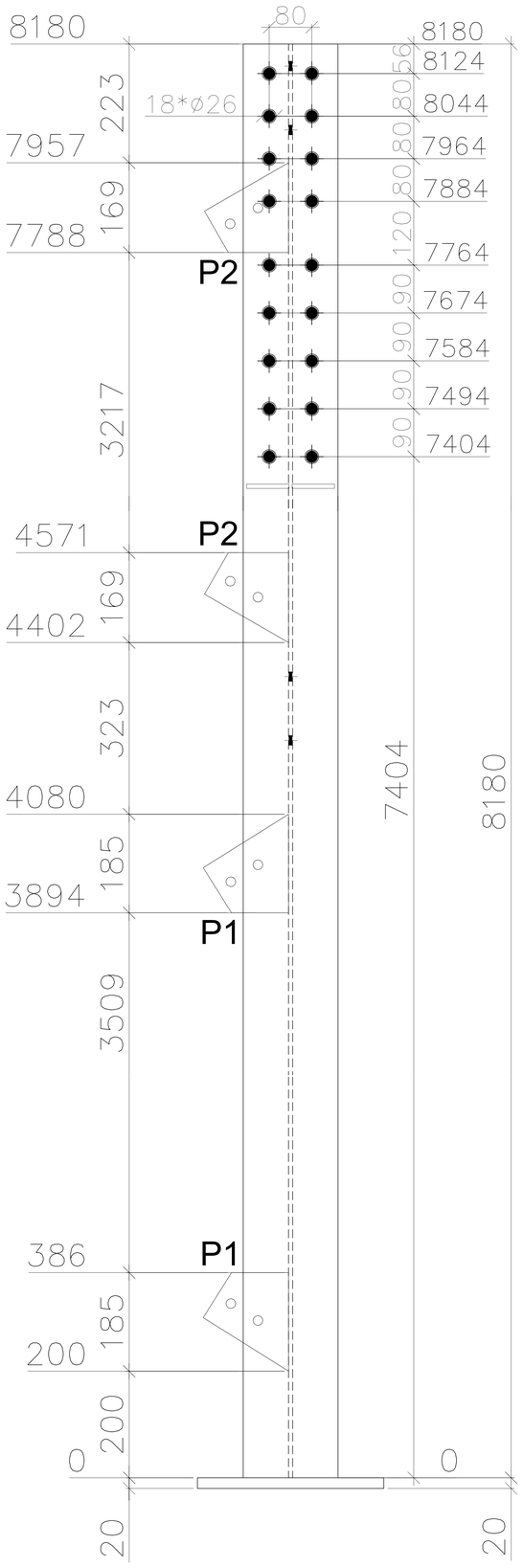

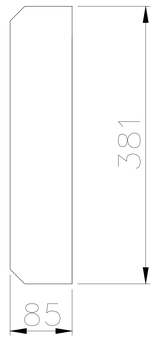

S2
10mm Thick

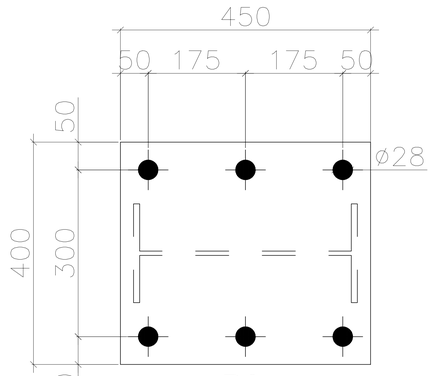

B1
20mm THICK

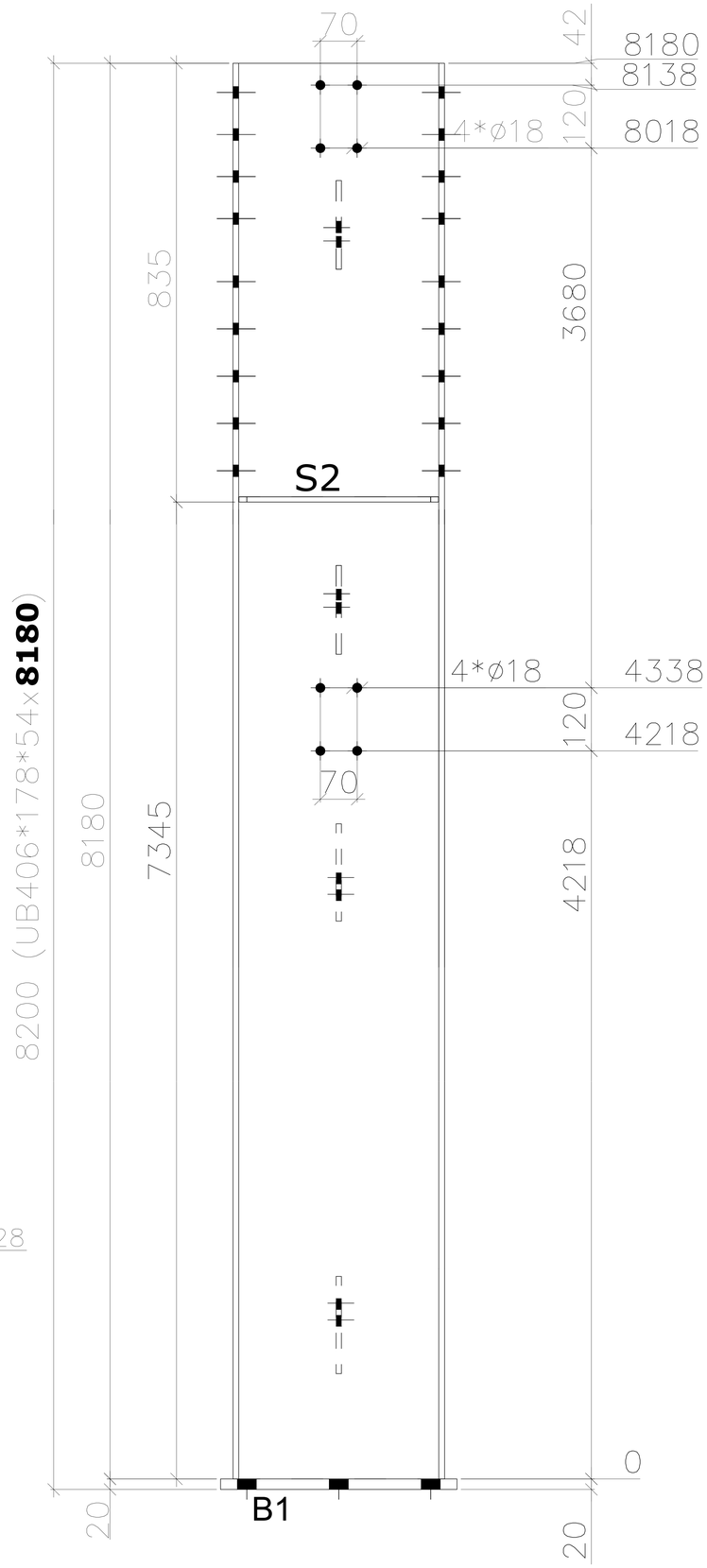

STANCHIONS

Qty - 66 Pcs

Bracing - 32 Pcs (ST3)

No Bracing - 34 Pcs (ST4)