MAMUDA
4 WAREHOUSES - KANO

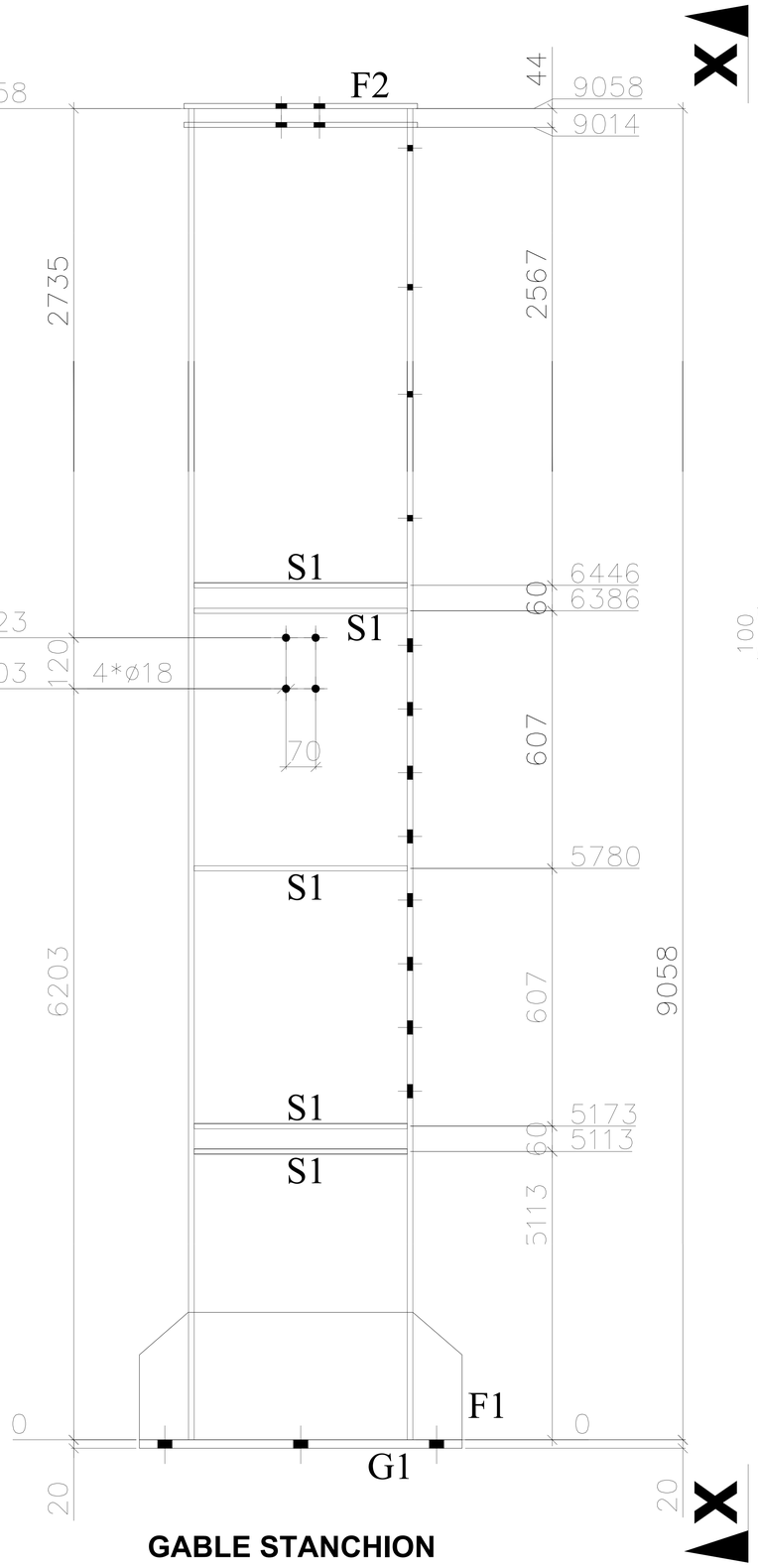

GABLE STANCHION
Qty: 16 Pcs
Left: 8 Pcs (GS1l)
Right: 8 Pcs (GS1r)

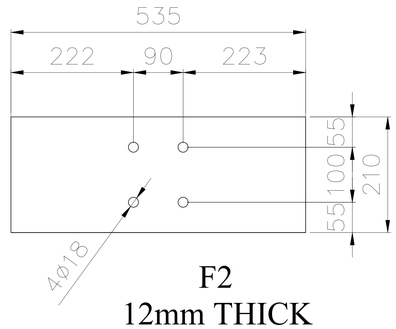

F2
12mm THICK

S1
12mm THICK

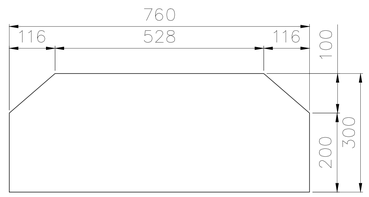

F1
12mm THICK

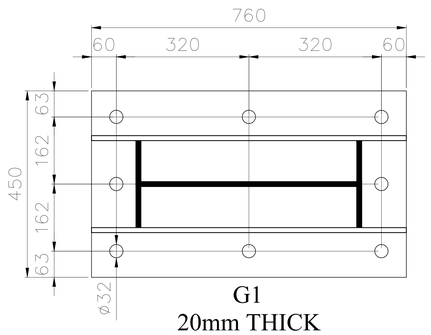

G1
20mm THICK

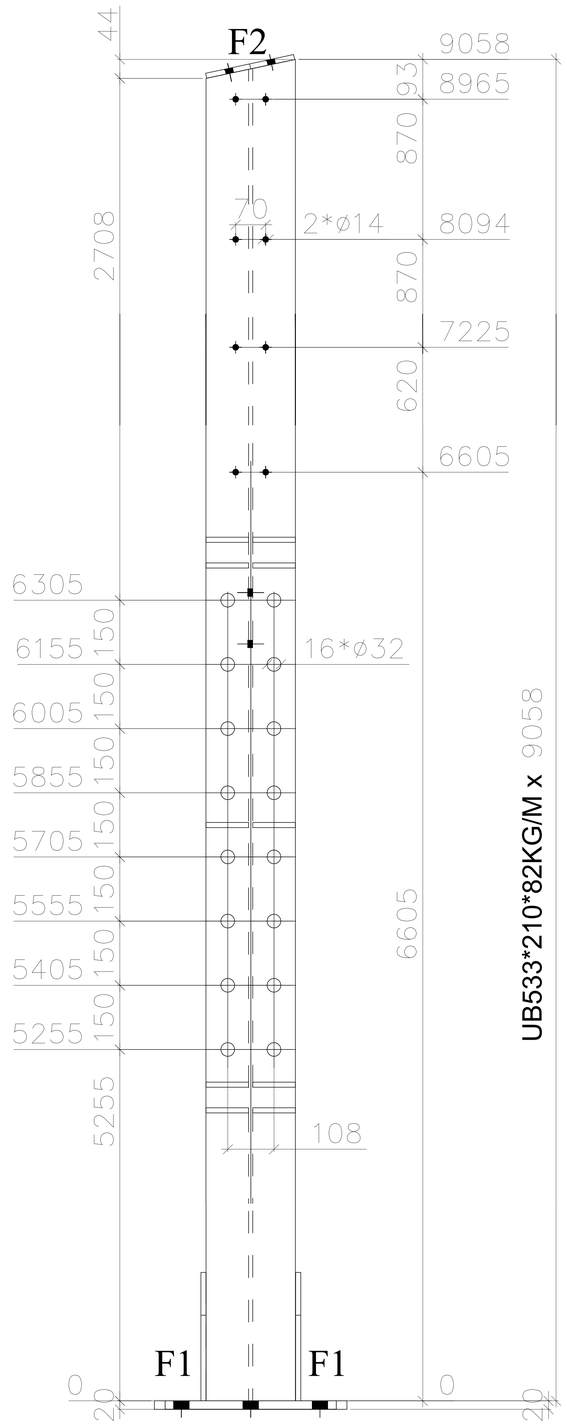

SECTION X - X