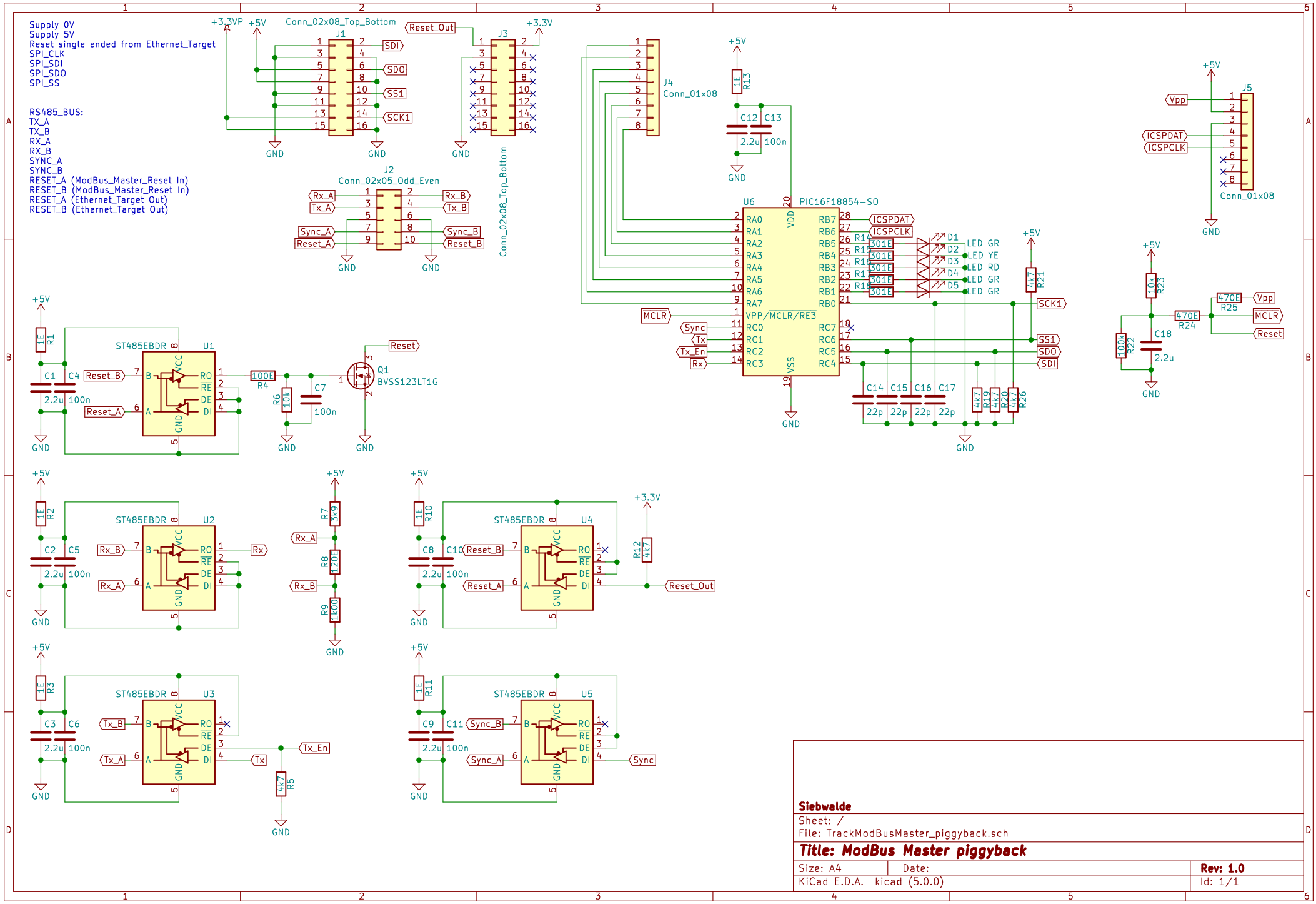
Supply 0V
Supply 5V
Reset single ended from Ethernet_Target
SPI_CLK
SPI_SDI
SPI_SDO
SPI_SS
RS485_BUS:
TX_A
TX_B
RX_A
RX_B
SYNC_A
SYNC_B
RESET_A (ModBus_Master_Reset In)
RESET_B (ModBus_Master_Reset In)
RESET_A (Ethernet_Target Out)
RESET_B (Ethernet_Target Out)
Conn_02x08_Top_Bottom
J1
J2
Conn_02x05_Odd_Even
J3
J4
Conn_01x08
J5
U6
PIC16F18854-SO
ST485EBDR
U1
U2
U3
U4
U5
Q1
BVSS123LT1G
Siebwalde
Sheet: /
File: TrackModBusMaster_piggyback.sch
Title: ModBus Master piggyback
Size: A4
Date:
Rev: 1.0
KiCad E.D.A. kicad (5.0.0)
Id: 1/1