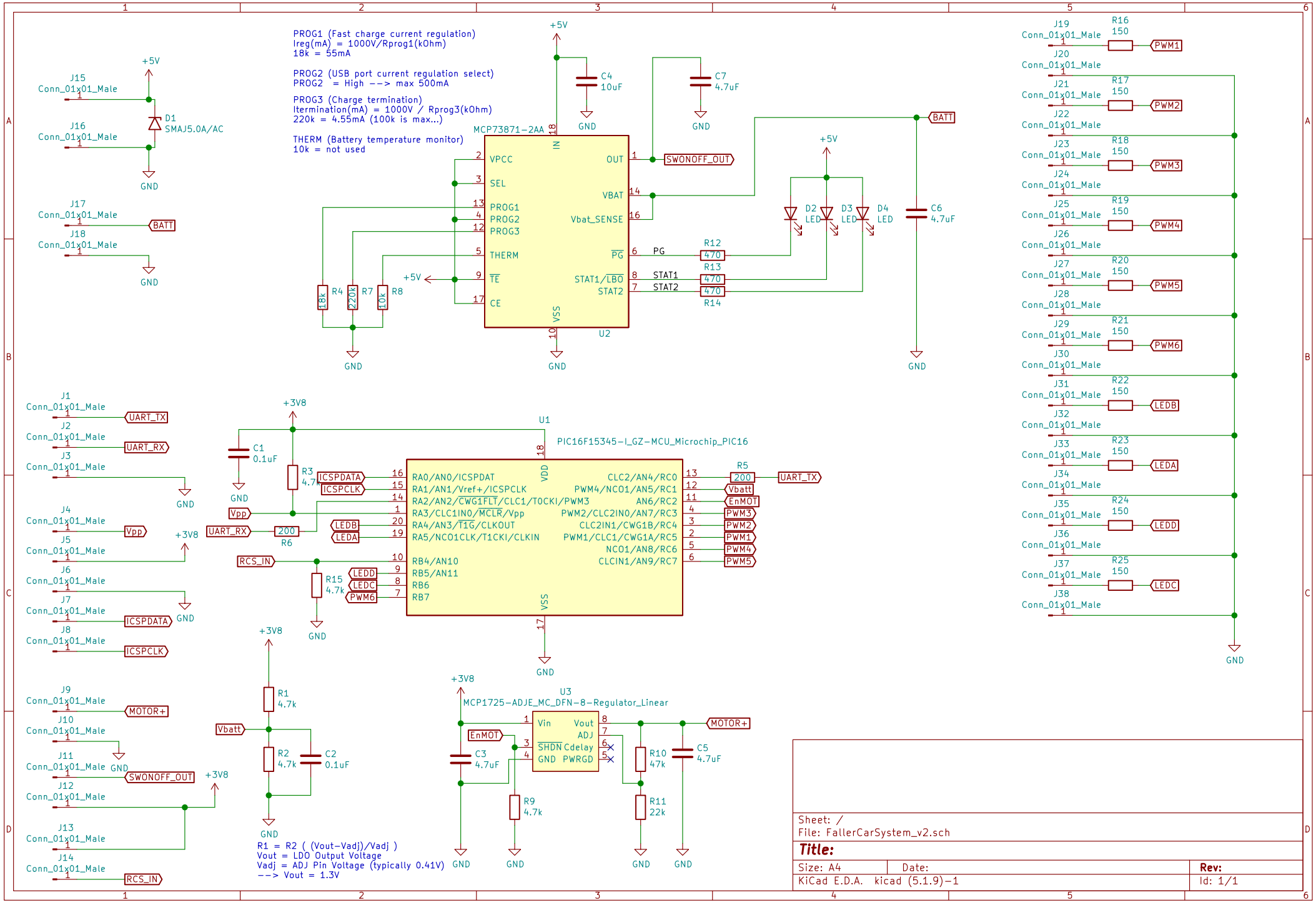
PROG1 (Fast charge current regulation)
Ireg(mA) = 1000V/Rprog1(kOhm)
18k = 55mA
PROG2 (USB port current regulation select)
PROG2 = High --> max 500mA
PROG3 (Charge termination)
Itermination(mA) = 1000V / Rprog3(kOhm)
220k = 4.55mA (100k is max...)
THERM (Battery temperature monitor)
10k = not used
MCP73871-2AA
U2
VPCC
SEL
PROG1
PROG2
PROG3
THERM
TE
CE
IN
OUT
VBAT
Vbat_SENSE
PG
STAT1/LBO
STAT2
VSS
SWONOFF_OUT
BATT
PG
STAT1
STAT2
R12 470
R13 470
R14 470
R4 18k
R7 220k
R8 10k
C4 10uF
C7 4.7uF
C6 4.7uF
D1 SMAJ5.0A/AC
D2 LED
D3 LED
D4 LED
J15 Conn_01x01_Male
J16 Conn_01x01_Male
J17 Conn_01x01_Male
J18 Conn_01x01_Male
+5V
GND
U1
PIC16F15345-I_GZ-MCU_Microchip_PIC16
RA0/AN0/ICSPDAT
RA1/AN1/Vref+/ICSPCLK
RA2/AN2/CWG1FLT/CLC1/T0CKI/PWM3
RA3/CLC1IN0/MCLR/Vpp
RA4/AN3/T1G/CLKOUT
RA5/NCO1CLK/T1CKI/CLKIN
RB4/AN10
RB5/AN11
RB6
RB7
CLC2/AN4/RC0
PWM4/NCO1/AN5/RC1
AN6/RC2
PWM2/CLC2IN0/AN7/RC3
CLC2IN1/CWG1B/RC4
PWM1/CLC1/CWG1A/RC5
NCO1/AN8/RC6
CLCIN1/AN9/RC7
VDD
VSS
ICSPDATA
ICSPCLK
LEDB
LEDA
LEDD
LEDC
PWM6
RCS_IN
Vpp
UART_RX
UART_TX
EnMOT
PWM3
PWM2
PWM1
PWM4
PWM5
Vbatt
R5 200
R6 200
R15 4.7k
R3 4.7k
C1 0.1uF
+3V8
J1 Conn_01x01_Male
J2 Conn_01x01_Male
J3 Conn_01x01_Male
J4 Conn_01x01_Male
J5 Conn_01x01_Male
J6 Conn_01x01_Male
J7 Conn_01x01_Male
J8 Conn_01x01_Male
J9 Conn_01x01_Male
J10 Conn_01x01_Male
J11 Conn_01x01_Male
J12 Conn_01x01_Male
J13 Conn_01x01_Male
J14 Conn_01x01_Male
R1 4.7k
R2 4.7k
C2 0.1uF
R1 = R2 ((Vout-Vadj)/Vadj)
Vout = LDO Output Voltage
Vadj = ADJ Pin Voltage (typically 0.41V)
--> Vout = 1.3V
U3
MCP1725-ADJE_MC_DFN-8-Regulator_Linear
Vin
Vout
ADJ
SHDN
Cdelay
GND
PWRGD
MOTOR+
C3 4.7uF
C5 4.7uF
R9 4.7k
R10 47k
R11 22k
J19 Conn_01x01_Male
J20 Conn_01x01_Male
J21 Conn_01x01_Male
J22 Conn_01x01_Male
J23 Conn_01x01_Male
J24 Conn_01x01_Male
J25 Conn_01x01_Male
J26 Conn_01x01_Male
J27 Conn_01x01_Male
J28 Conn_01x01_Male
J29 Conn_01x01_Male
J30 Conn_01x01_Male
J31 Conn_01x01_Male
J32 Conn_01x01_Male
J33 Conn_01x01_Male
J34 Conn_01x01_Male
J35 Conn_01x01_Male
J36 Conn_01x01_Male
J37 Conn_01x01_Male
J38 Conn_01x01_Male
R16 150
R17 150
R18 150
R19 150
R20 150
R21 150
R22 150
R23 150
R24 150
R25 150
PWM1
PWM2
PWM3
PWM4
PWM5
PWM6
LEDB
LEDA
LEDD
LEDC
Sheet: /
File: FallerCarSystem_v2.sch
Title:
Size: A4
Date:
Rev:
KiCad E.D.A. kicad (5.1.9)-1
Id: 1/1