FY - OPTO_BOARD_2_MISC_PG5

OPTO_BOARD_2_PG1
PORTBbits.RA0 = ETHERNET LED1
PORTBbits.RA1 = ETHERNET LED2
PORTBbits.RA2 = ADCONVERTER ENC TOP
PORTBbits.RA3 = ADCONVERTER ENC BOTTOM
PORTBbits.RA4 = Led1
PORTBbits.RA5 = Led2
3.3V, 2mA

PORTBbits.RB0 = SPARE_SWITCH_INPUT_TOP
PORTBbits.RB1 = SPARE_SWITCH_INPUT_BOTTOM
PORTBbits.RB2 = Led3
PORTBbits.RB3 = IO_Expander_Enable I^2C
PORTBbits.RB4 = Output_Enable
PORTBbits.RB5 = Externall_WDT
PORTBbits.RB6 = INCIRCUIT PROGRAM/DEBUG
PORTBbits.RB7 = INCIRCUIT PROGRAM/DEBUG
5.0V, 25mA

PORTDbits.RD0 = M10_ Top
PORTDbits.RD1 = Track 7 enable
PORTDbits.RD2 = Bezet_Weerstand_ Top
PORTDbits.RD3 = M10_ Bottom
PORTDbits.RD4 = Track 18 enable
PORTDbits.RD5 = SERIAL CLOCK I^2C
PORTDbits.RD6 = SERIAL DATA I^2C
PORTDbits.RD7 = Bezet_Weerstand_ Bottom
5.0V, 8mA

FY - OPTO_BOARD_1_SWBOT_PG4

OPTO_BOARD_1_BOT_PG1
PORTCbits.RC0 = Brake Bottom
PORTCbits.RC1 = SPARE1
PORTCbits.RC2 = PWM Bottom
PORTCbits.RC3 = F13_ Bottom
PORTCbits.RC4 = F10_ Bottom
PORTCbits.RC5 = F11_ Bottom
PORTCbits.RC6 = F12_ Bottom
PORTCbits.RC7 = EOS_10_ Bottom
5.0V, 25mA

PORTFbits.RF0 = CL_10_ bit1 Bottom
PORTFbits.RF1 = CL_10_ bit2 Bottom
PORTFbits.RF2 = CL_10_ bit3 Bottom
PORTFbits.RF3 = CL_10_ bit4 Bottom
PORTFbits.RF4 = CL_10_Heart_ Bottom
PORTFbits.RF5 = SPARE2
PORTFbits.RF6 = SPARE3
PORTFbits.RF7 = EOS_11_ Bottom
3.3V, 2mA

FY - OPTO_BOARD_1_SWTOP_PG3

OPTO_BOARD_1_TOP_PG1
PORTGbits.RG0 = PWM Top
PORTGbits.RG1 = SPARE1
PORTGbits.RG2 = Brake Top
PORTGbits.RG3 = F13_ Top
PORTGbits.RG4 = F10_ Top
PORTGbits.RG5 = F11_ Top
PORTGbits.RG6 = F12_ Top
PORTGbits.RG7 = EOS_10_ Top
5.0V, 2mA

PORTJbits.RJ0 = CL_10_ bit1 Top
PORTJbits.RJ1 = CL_10_ bit2 Top
PORTJbits.RJ2 = CL_10_ bit3 Top
PORTJbits.RJ3 = CL_10_ bit4 Top
PORTJbits.RJ4 = CL_10_Heart_ Top
PORTJbits.RJ5 = SPARE2
PORTJbits.RJ6 = SPARE3
PORTJbits.RJ7 = EOS_11_ Top
5.0V, 8mA

FY - OPTO_BOARD_3_OCC_PG7

OPTO_BOARD_3_PG1
PORTEbits.RE0 = OCC_IN_5B
PORTEbits.RE1 = OCC_IN_6
PORTEbits.RE2 = OCC_IN_7
PORTEbits.RE3 = OCC_IN_SPARE
PORTEbits.RE4 = OCC_IN_16B
PORTEbits.RE5 = OCC_IN_17
PORTEbits.RE6 = OCC_IN_18
PORTEbits.RE7 = OCC_IN_SPARE
5.0V, 8mA

PORTHbits.RH0 = OCC_OUT_5B
PORTHbits.RH1 = OCC_OUT_6
PORTHbits.RH2 = OCC_OUT_7
PORTHbits.RH3 = OCC_OUT_8A
PORTHbits.RH4 = OCC_OUT_16B
PORTHbits.RH5 = OCC_OUT_17
PORTHbits.RH6 = OCC_OUT_18
PORTHbits.RH7 = OCC_OUT_19A
3.3V, 2mA

Connections from bottom of PCB to top

X1	X2	X3	X4	X5	X6	X7	X8	X9	X10	X11	X12	X13	X14
	30			30	31	30	30	30	30	30	30	30	30
				29	29	29	29	29	29	29	29	29	29
	|			28	28	28	28	28	28	28	28	28	28
				27	27	27	27	27	27	27	27	27	27
	26			26	26	26	26	26	26	26	26	26	26
				25	25	13	13	13	13	25	25	25	25
	25			24	24	25	25	25	25	24	24	24	24
				23	23	12	12	12	12	23	23	23	23
	|			22	22	24	24	24	24	22	22	22	22
				21	21	11	11	11	11	21	21	21	21
	21			20	20	23	23	23	23	20	20	20	20
				19	19	10	10	10	10	19	19	19	19
	20			18	18	22	22	22	22	18	18	18	18
				17	17	9	9	9	9	17	17	17	17
	|			16	16	21	21	21	21	16	16	16	16
				15	15	8	8	8	8	15	15	15	15
	16			14	14	20	20	20	20	14	14	14	14
				13	13	7	7	7	7	13	13	13	13
	15			12	12	19	19	19	19	12	12	12	12
				11	11	6	6	6	6	11	11	11	11
	|			10	10	18	18	18	18	10	10	10	10
				9	9	5	5	5	5	9	9	9	9
	11			8	8	17	17	17	17	8	8	8	8
				7	7	4	4	4	4	7	7	7	7
	10			6	6	16	16	16	16	6	6	6	6
				5	5	3	3	3	3	5	5	5	5
	|			4	4	15	15	15	15	4	4	4	4
				3	3	2	2	2	2	3	3	3	3
	6			2	2	14	14	14	14	2	2	2	2
				1	1	1	1	1	1	1	1	1	1
	5												
	|												
	1												

Title
FY - IO_MAPPING_OF_uC
Size A4
Document Number <Doc>
Rev 1.0
Date: Wednesday, December 23, 2015
Sheet 1 of 1

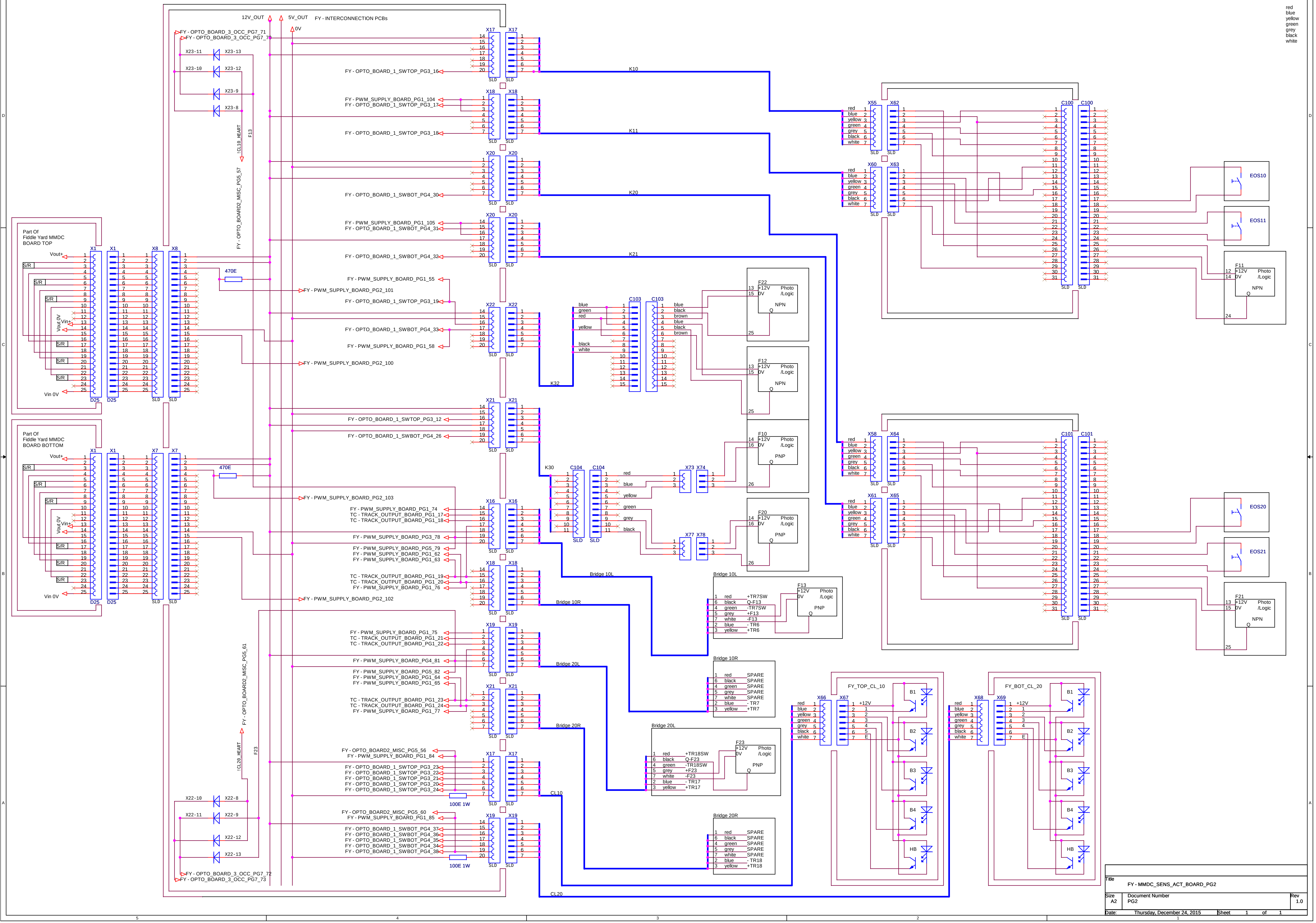
12V_OUT
5V_OUT
0V
FY - INTERCONNECTION PCBs
FY - OPTO_BOARD_3_OCC_PG7_71
FY - OPTO_BOARD_3_OCC_PG7_70
X23-11
X23-13
X23-10
X23-12
X23-9
X23-8
!CL10_HEART
F13
FY - OPTO_BOARD2_MISC_PG5_57
FY - OPTO_BOARD_1_SWTOP_PG3_16
FY - PWM_SUPPLY_BOARD_PG1_104
FY - OPTO_BOARD_1_SWTOP_PG3_17
FY - OPTO_BOARD_1_SWTOP_PG3_18
FY - OPTO_BOARD_1_SWBOT_PG4_30
FY - PWM_SUPPLY_BOARD_PG1_105
FY - OPTO_BOARD_1_SWBOT_PG4_31
FY - OPTO_BOARD_1_SWBOT_PG4_32
FY - PWM_SUPPLY_BOARD_PG1_55
FY - PWM_SUPPLY_BOARD_PG2_101
FY - OPTO_BOARD_1_SWTOP_PG3_19
FY - OPTO_BOARD_1_SWBOT_PG4_33
FY - PWM_SUPPLY_BOARD_PG1_58
FY - PWM_SUPPLY_BOARD_PG2_100
FY - OPTO_BOARD_1_SWTOP_PG3_12
FY - OPTO_BOARD_1_SWBOT_PG4_26
FY - PWM_SUPPLY_BOARD_PG2_103
FY - PWM_SUPPLY_BOARD_PG1_74
TC - TRACK_OUTPUT_BOARD_PG1_17
TC - TRACK_OUTPUT_BOARD_PG1_18
FY - PWM_SUPPLY_BOARD_PG3_78
FY - PWM_SUPPLY_BOARD_PG5_79
FY - PWM_SUPPLY_BOARD_PG1_62
FY - PWM_SUPPLY_BOARD_PG1_63
TC - TRACK_OUTPUT_BOARD_PG1_19
TC - TRACK_OUTPUT_BOARD_PG1_20
FY - PWM_SUPPLY_BOARD_PG1_76
FY - PWM_SUPPLY_BOARD_PG2_102
FY - PWM_SUPPLY_BOARD_PG1_75
TC - TRACK_OUTPUT_BOARD_PG1_21
TC - TRACK_OUTPUT_BOARD_PG1_22
FY - PWM_SUPPLY_BOARD_PG4_81
FY - PWM_SUPPLY_BOARD_PG5_82
FY - PWM_SUPPLY_BOARD_PG1_64
FY - PWM_SUPPLY_BOARD_PG1_65
TC - TRACK_OUTPUT_BOARD_PG1_23
TC - TRACK_OUTPUT_BOARD_PG1_24
FY - PWM_SUPPLY_BOARD_PG1_77
FY - OPTO_BOARD2_MISC_PG5_61
!CL20_HEART
F23
FY - OPTO_BOARD2_MISC_PG5_56
FY - PWM_SUPPLY_BOARD_PG1_84
FY - OPTO_BOARD_1_SWTOP_PG3_23
FY - OPTO_BOARD_1_SWTOP_PG3_22
FY - OPTO_BOARD_1_SWTOP_PG3_21
FY - OPTO_BOARD_1_SWTOP_PG3_20
FY - OPTO_BOARD_1_SWTOP_PG3_24
100E 1W
FY - OPTO_BOARD2_MISC_PG5_60
FY - PWM_SUPPLY_BOARD_PG1_85
FY - OPTO_BOARD_1_SWBOT_PG4_37
FY - OPTO_BOARD_1_SWBOT_PG4_36
FY - OPTO_BOARD_1_SWBOT_PG4_35
FY - OPTO_BOARD_1_SWBOT_PG4_34
FY - OPTO_BOARD_1_SWBOT_PG4_38
100E 1W
X22-10
X22-8
X22-11
X22-9
X22-12
X22-13
FY - OPTO_BOARD_3_OCC_PG7_72
FY - OPTO_BOARD_3_OCC_PG7_73
Part Of
Fiddle Yard MMDC
BOARD TOP
Vout+
S/R
Vout 0V
Vin+
Vin 0V
X1
D25
X8
SLD
470E
Part Of
Fiddle Yard MMDC
BOARD BOTTOM
X7
470E
X17
X18
X20
X22
X21
X16
X19
K10
K11
K20
K21
K32
K30
Bridge 10L
Bridge 10R
Bridge 20L
Bridge 20R
CL10
CL20
C103
blue
green
red
yellow
black
white
brown
C104
X73
X74
X77
X78
F22
F12
F10
F20
F13
F23
F11
F21
+12V
0V
Photo
/Logic
NPN
PNP
Q
+TR7SW
Q-F13
-TR7SW
+F13
-F13
- TR6
+TR6
SPARE
- TR7
+TR7
+TR18SW
Q-F23
-TR18SW
+F23
-F23
- TR17
+TR17
- TR18
+TR18
X55
X62
X60
X63
X58
X64
X61
X65
C100
C101
EOS10
EOS11
EOS20
EOS21
FY_TOP_CL_10
FY_BOT_CL_20
X66
X67
X68
X69
B1
B2
B3
B4
HB
E
red
blue
yellow
green
grey
black
white

Title
FY - MMDC_SENS_ACT_BOARD_PG2

Size	Document Number	Rev
A2	PG2	1.0

Date: Thursday, December 24, 2015 Sheet 1 of 1

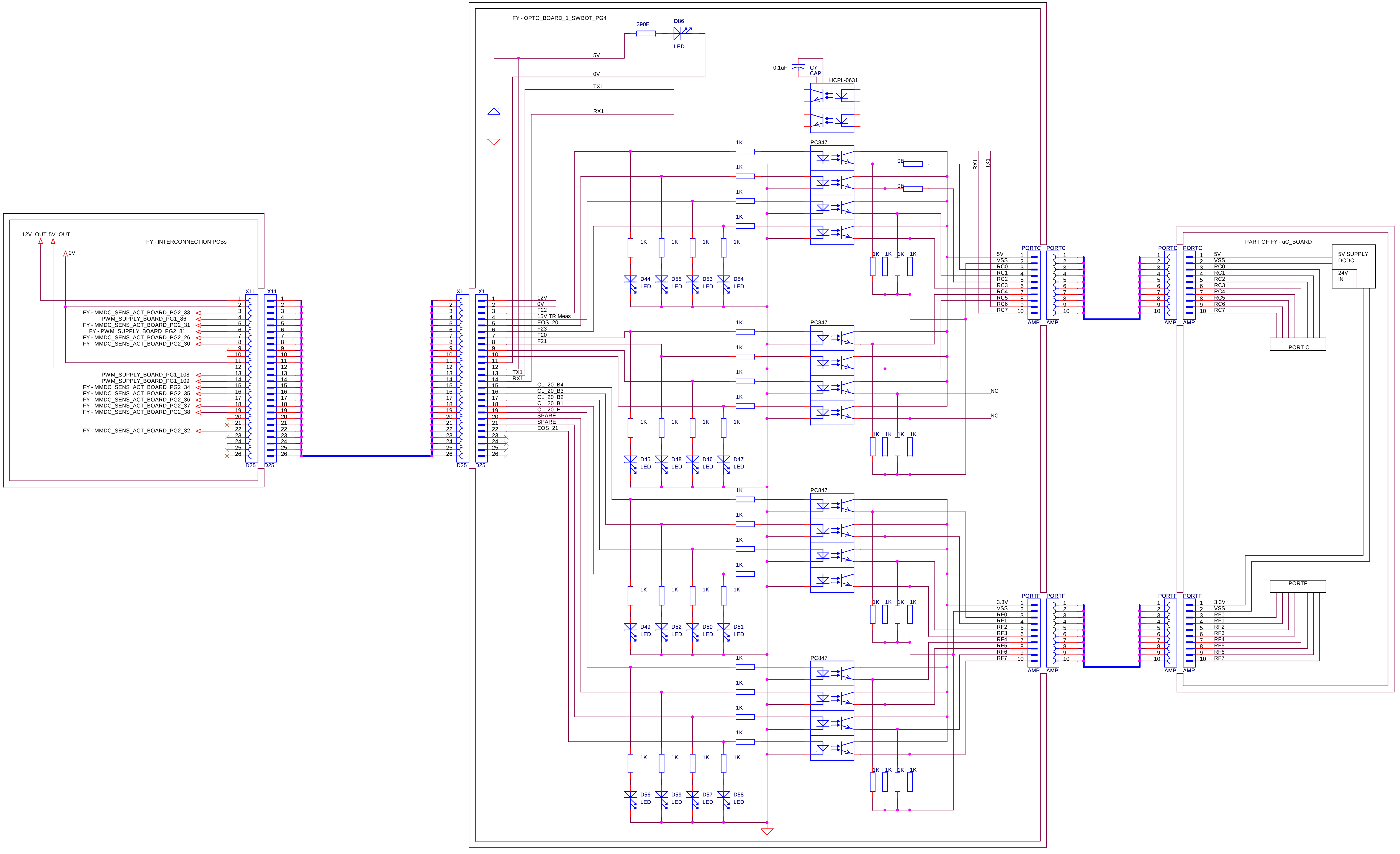
FY - INTERCONNECTION PCBs
12V_OUT
5V_OUT
0V
X11
D25
FY - MMDC_SENS_ACT_BOARD_PG2_33
PWM_SUPPLY_BOARD_PG1_86
FY - MMDC_SENS_ACT_BOARD_PG2_31
FY - PWM_SUPPLY_BOARD_PG2_81
FY - MMDC_SENS_ACT_BOARD_PG2_26
FY - MMDC_SENS_ACT_BOARD_PG2_30
PWM_SUPPLY_BOARD_PG1_108
PWM_SUPPLY_BOARD_PG1_109
FY - MMDC_SENS_ACT_BOARD_PG2_34
FY - MMDC_SENS_ACT_BOARD_PG2_35
FY - MMDC_SENS_ACT_BOARD_PG2_36
FY - MMDC_SENS_ACT_BOARD_PG2_37
FY - MMDC_SENS_ACT_BOARD_PG2_38
FY - MMDC_SENS_ACT_BOARD_PG2_32
FY - OPTO_BOARD_1_SWBOT_PG4
X1
D25
12V
0V
F22
15V TR Meas
EOS_20
F23
F20
F21
TX1
RX1
CL_20_B4
CL_20_B3
CL_20_B2
CL_20_B1
CL_20_H
SPARE
SPARE
EOS_21
390E
D86
LED
5V
0V
TX1
RX1
0.1uF
C7
CAP
HCPL-0631
PC847
1K
0E
0E
RX1
TX1
D44 LED
D55 LED
D53 LED
D54 LED
D45 LED
D48 LED
D46 LED
D47 LED
D49 LED
D52 LED
D50 LED
D51 LED
D56 LED
D59 LED
D57 LED
D58 LED
NC
NC
PORTC
AMP
5V
VSS
RC0
RC1
RC2
RC3
RC4
RC5
RC6
RC7
PART OF FY - uC_BOARD
5V SUPPLY
DCDC
24V
IN
PORT C
PORTF
3.3V
VSS
RF0
RF1
RF2
RF3
RF4
RF5
RF6
RF7
PORTF

Title
FY - OPTO_BOARD_1_SWBOT_PG4

Size	Document Number	Rev
A2	PG4	1.0

Date: Thursday, December 24, 2015 Sheet 1 of 1

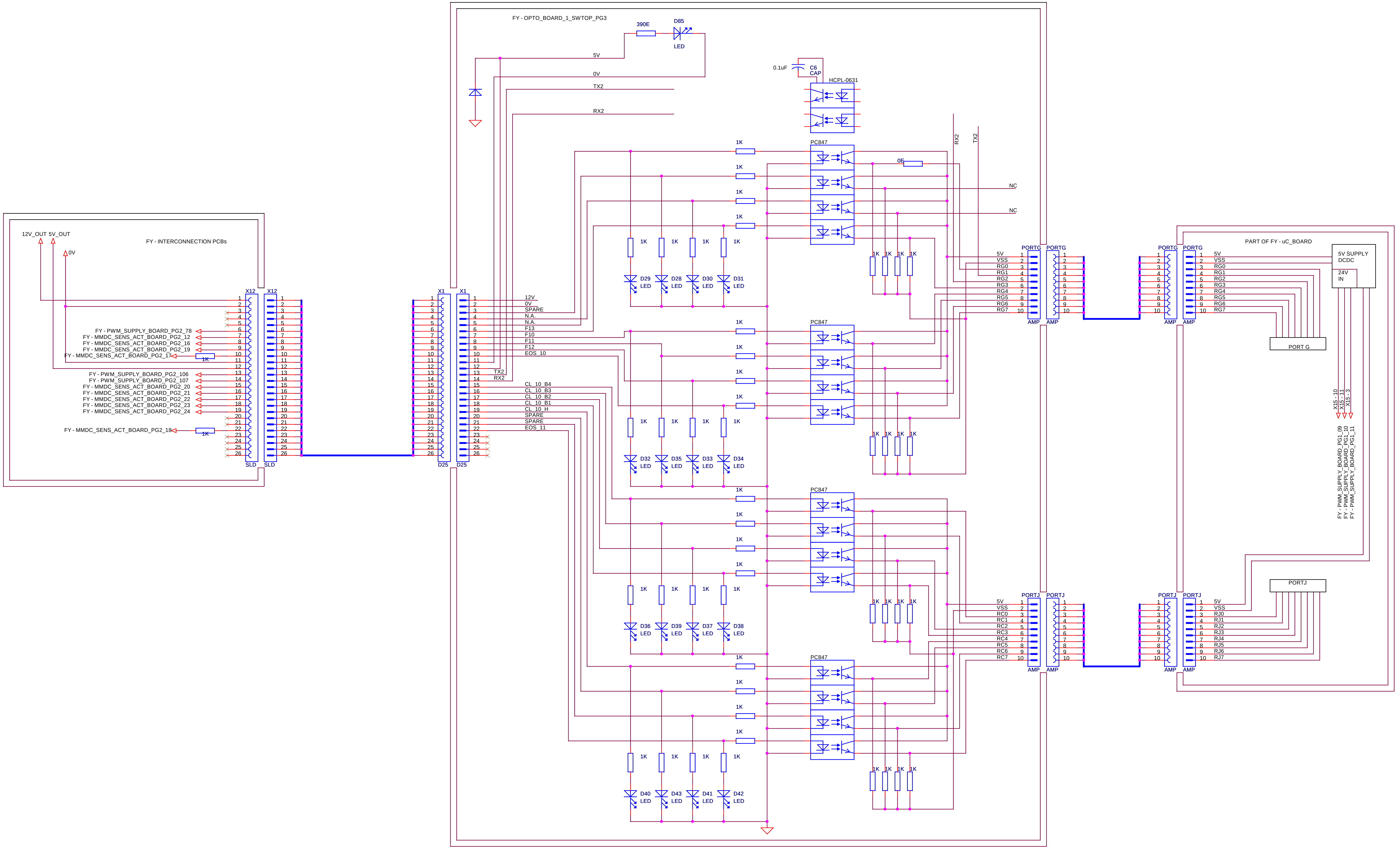
FY - OPTO_BOARD_1_SWTOP_PG3
FY - INTERCONNECTION PCBs
12V_OUT
5V_OUT
0V
X12
SLD
FY - PWM_SUPPLY_BOARD_PG2_78
FY - MMDC_SENS_ACT_BOARD_PG2_12
FY - MMDC_SENS_ACT_BOARD_PG2_16
FY - MMDC_SENS_ACT_BOARD_PG2_19
FY - MMDC_SENS_ACT_BOARD_PG2_17
FY - PWM_SUPPLY_BOARD_PG2_106
FY - PWM_SUPPLY_BOARD_PG2_107
FY - MMDC_SENS_ACT_BOARD_PG2_20
FY - MMDC_SENS_ACT_BOARD_PG2_21
FY - MMDC_SENS_ACT_BOARD_PG2_22
FY - MMDC_SENS_ACT_BOARD_PG2_23
FY - MMDC_SENS_ACT_BOARD_PG2_24
FY - MMDC_SENS_ACT_BOARD_PG2_18
1K
X1
D25
12V
0V
SPARE
N.A.
N.A.
F13
F10
F11
F12
EOS_10
TX2
RX2
CL_10_B4
CL_10_B3
CL_10_B2
CL_10_B1
CL_10_H
SPARE
SPARE
EOS_11
5V
0V
TX2
RX2
390E
D85
LED
0.1uF
C6
CAP
HCPL-0631
PC847
0E
NC
NC
RX2
TX2
D29
D28
D30
D31
D32
D35
D33
D34
D36
D39
D37
D38
D40
D43
D41
D42
LED
1K
PORTG
AMP
5V
VSS
RG0
RG1
RG2
RG3
RG4
RG5
RG6
RG7
PART OF FY - uC_BOARD
5V SUPPLY
DCDC
24V
IN
PORT G
X15 - 10
X15 - 11
X15 - 3
FY - PWM_SUPPLY_BOARD_PG1_09
FY - PWM_SUPPLY_BOARD_PG1_10
FY - PWM_SUPPLY_BOARD_PG1_11
PORTJ
RC0
RC1
RC2
RC3
RC4
RC5
RC6
RC7
RJ0
RJ1
RJ2
RJ3
RJ4
RJ5
RJ6
RJ7

Title
FY - OPTO_BOARD_1_SWTOP_PG3

Size	Document Number	Rev
A2	PG3	1.0

Date: Thursday, December 24, 2015 Sheet 1 of 1

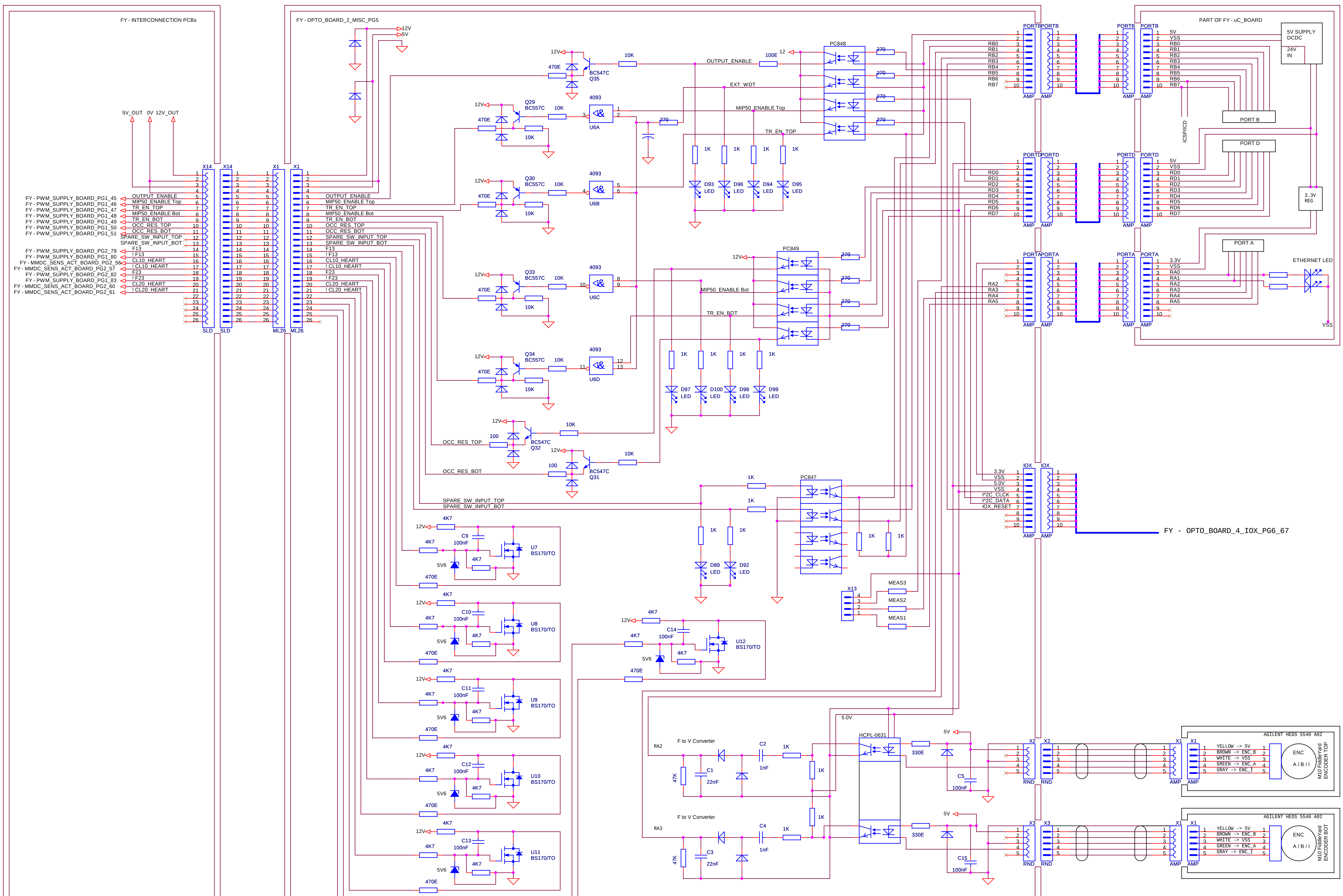
FY - INTERCONNECTION PCBs
5V_OUT
0V
12V_OUT
X14
SLD
X1
ML26
FY - PWM_SUPPLY_BOARD_PG1_45
FY - PWM_SUPPLY_BOARD_PG1_46
FY - PWM_SUPPLY_BOARD_PG1_47
FY - PWM_SUPPLY_BOARD_PG1_48
FY - PWM_SUPPLY_BOARD_PG1_49
FY - PWM_SUPPLY_BOARD_PG1_50
FY - PWM_SUPPLY_BOARD_PG1_51
FY - PWM_SUPPLY_BOARD_PG2_79
FY - PWM_SUPPLY_BOARD_PG1_80
FY - MMDC_SENS_ACT_BOARD_PG2_56
FY - MMDC_SENS_ACT_BOARD_PG2_57
FY - PWM_SUPPLY_BOARD_PG2_82
FY - PWM_SUPPLY_BOARD_PG1_83
FY - MMDC_SENS_ACT_BOARD_PG2_60
FY - MMDC_SENS_ACT_BOARD_PG2_61
OUTPUT_ENABLE
MIP50_ENABLE Top
TR_EN_TOP
MIP50_ENABLE Bot
TR_EN_BOT
OCC_RES_TOP
OCC_RES_BOT
SPARE_SW_INPUT_TOP
SPARE_SW_INPUT_BOT
F13
! F13
CL10_HEART
! CL10_HEART
F23
! F23
CL20_HEART
! CL20_HEART
FY - OPTO_BOARD_2_MISC_PG5
12V
5V
Q35 BC547C
Q29 BC557C
Q30 BC557C
Q33 BC557C
Q34 BC557C
Q32 BC547C
Q31 BC547C
470E
10K
100
4093
U6A
U6B
U6C
U6D
100E
EXT_WDT
270
PC848
PC849
PC847
1K
D93 LED
D96 LED
D94 LED
D95 LED
D97 LED
D100 LED
D98 LED
D99 LED
D89 LED
D92 LED
4K7
C9 100nF
C10 100nF
C11 100nF
C12 100nF
C13 100nF
C14 100nF
5V6
U7 BS170/TO
U8 BS170/TO
U9 BS170/TO
U10 BS170/TO
U11 BS170/TO
U12 BS170/TO
X13
MEAS3
MEAS2
MEAS1
F to V Converter
RA2
RA3
47K
C1 22nF
C3 22nF
C2 1nF
C4 1nF
5.0V
HCPL-0631
330E
C5 100nF
C15 100nF
X2
X3
RND
AMP
PORTB
PORTD
PORTA
IOX
RB0
RB1
RB2
RB3
RB4
RB5
RB6
RB7
RD0
RD1
RD2
RD3
RD4
RD5
RD6
RD7
RA0
RA1
RA2
RA3
RA4
RA5
3.3V
VSS
5.0V
I^2C_CLCK
I^2C_DATA
IOX_RESET
FY - OPTO_BOARD_4_IOX_PG6_67
PART OF FY - uC_BOARD
5V SUPPLY DCDC
24V IN
PORT B
ICSP/ICD
PORT D
3.3V REG
PORT A
ETHERNET LED
AGILENT HEDS 5540 A02
YELLOW -> 5V
BROWN -> ENC_B
WHITE -> VSS
GREEN -> ENC_A
GRAY -> ENC_I
ENC
A / B / I
M10 FiddleYard ENCODER TOP
M10 FiddleYard ENCODER BOT
5
4
3
2
1
D
C
B
A

Title
FY - OPTO_BOARD_2_MISC_PG5

Size	Document Number	Rev
A2	PG5	1.0

Date: Thursday, December 24, 2015 Sheet 1 of 1

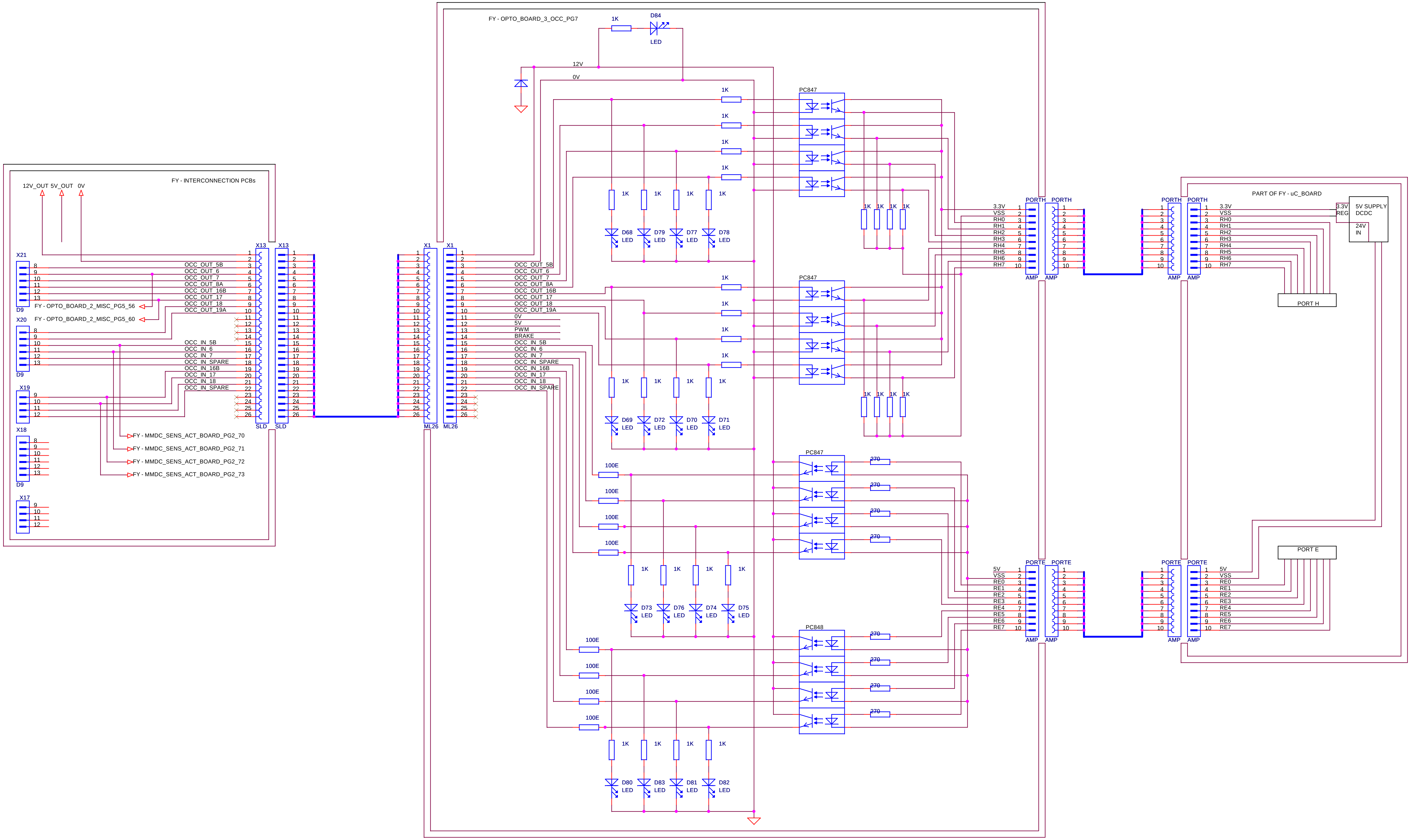
FY - INTERCONNECTION PCBs
12V_OUT
5V_OUT
0V
X21
X20
X19
X18
X17
D9
FY - OPTO_BOARD_2_MISC_PG5_56
FY - OPTO_BOARD_2_MISC_PG5_60
OCC_OUT_5B
OCC_OUT_6
OCC_OUT_7
OCC_OUT_8A
OCC_OUT_16B
OCC_OUT_17
OCC_OUT_18
OCC_OUT_19A
OCC_IN_5B
OCC_IN_6
OCC_IN_7
OCC_IN_SPARE
OCC_IN_16B
OCC_IN_17
OCC_IN_18
OCC_IN_SPARE
FY - MMDC_SENS_ACT_BOARD_PG2_70
FY - MMDC_SENS_ACT_BOARD_PG2_71
FY - MMDC_SENS_ACT_BOARD_PG2_72
FY - MMDC_SENS_ACT_BOARD_PG2_73
X13
SLD
X1
ML26
FY - OPTO_BOARD_3_OCC_PG7
0V
5V
PWM
BRAKE
12V
1K
D84
LED
PC847
PC848
D68
D79
D77
D78
D69
D72
D70
D71
D73
D76
D74
D75
D80
D83
D81
D82
100E
270
PORTH
PORTE
AMP
3.3V
VSS
RH0
RH1
RH2
RH3
RH4
RH5
RH6
RH7
5V
RE0
RE1
RE2
RE3
RE4
RE5
RE6
RE7
PART OF FY - uC_BOARD
3.3V REG
5V SUPPLY DCDC
24V IN
PORT H
PORT E

Title
FY - OPTO_BOARD_3_OCC_PG7

Size A2
Document Number PG7
Rev 1.0

Date: Sunday, April 22, 2012
Sheet 1 of 1

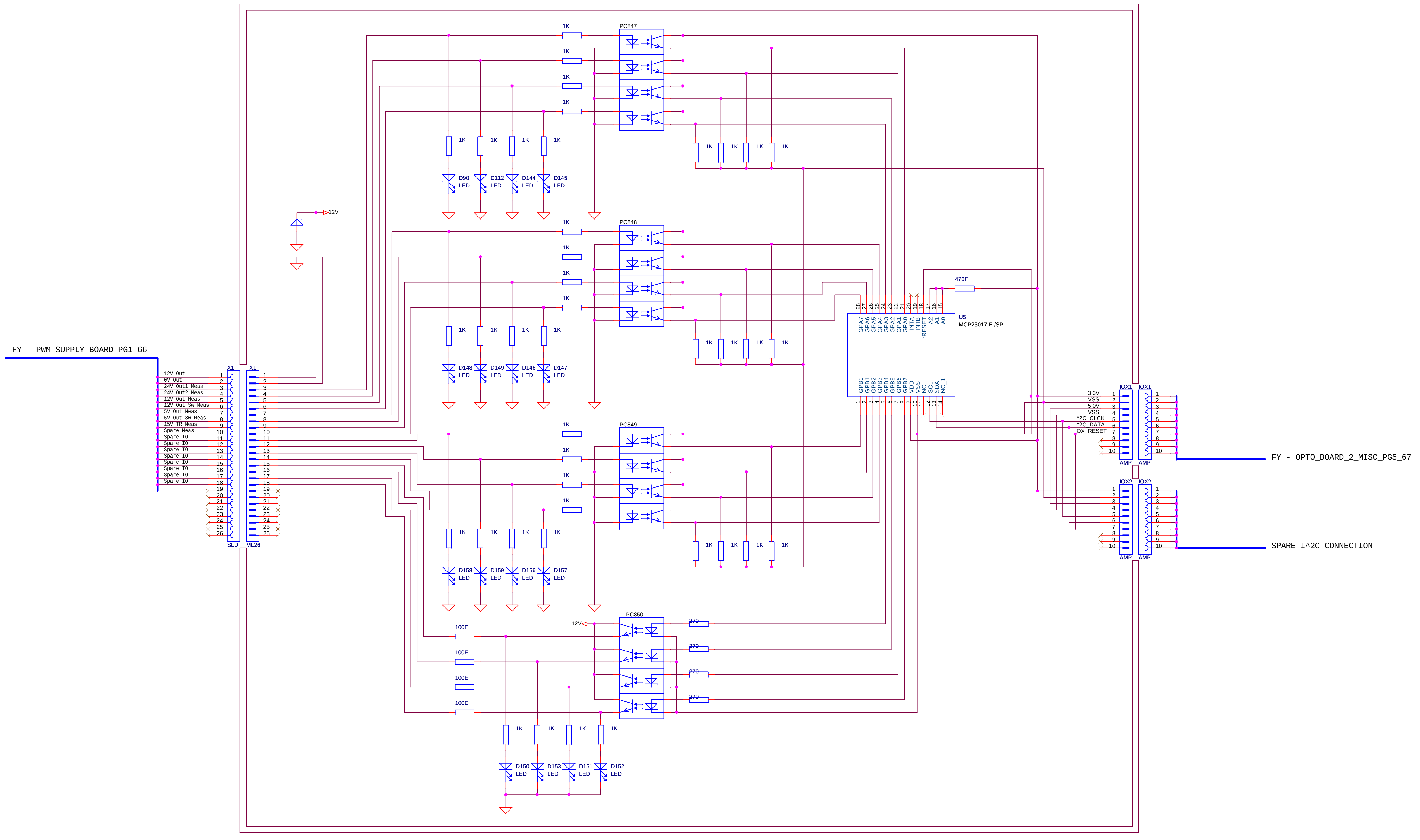
FY - PWM_SUPPLY_BOARD_PG1_66
12V Out
0V Out
24V Out1 Meas
24V Out2 Meas
12V Out Meas
12V Out Sw Meas
5V Out Meas
5V Out Sw Meas
15V TR Meas
Spare Meas
Spare IO
Spare IO
Spare IO
Spare IO
Spare IO
Spare IO
Spare IO
Spare IO
X1
SLD
X1
ML26
12V
PC847
PC848
PC849
PC850
1K
100E
270
470E
D90
D112
D144
D145
D148
D149
D146
D147
D158
D159
D156
D157
D150
D153
D151
D152
LED
U5
MCP23017-E /SP
GPA7 GPA6 GPA5 GPA4 GPA3 GPA2 GPA1 GPA0 INTA INTB *RESET A2 A1 A0
GPB0 GPB1 GPB2 GPB3 GPB4 GPB5 GPB6 GPB7 VDD VSS NC SCL SDA NC_1
3.3V
VSS
5.0V
VSS
I^2C_CLCK
I^2C_DATA
IOX_RESET
IOX1
IOX2
AMP
FY - OPTO_BOARD_2_MISC_PG5_67
SPARE I^2C CONNECTION

Title
FY - OPTO_BOARD_4_IOX_PG6

Size	Document Number	Rev
A2	PG6	1.0

Date: Thursday, February 23, 2012 Sheet 1 of 1

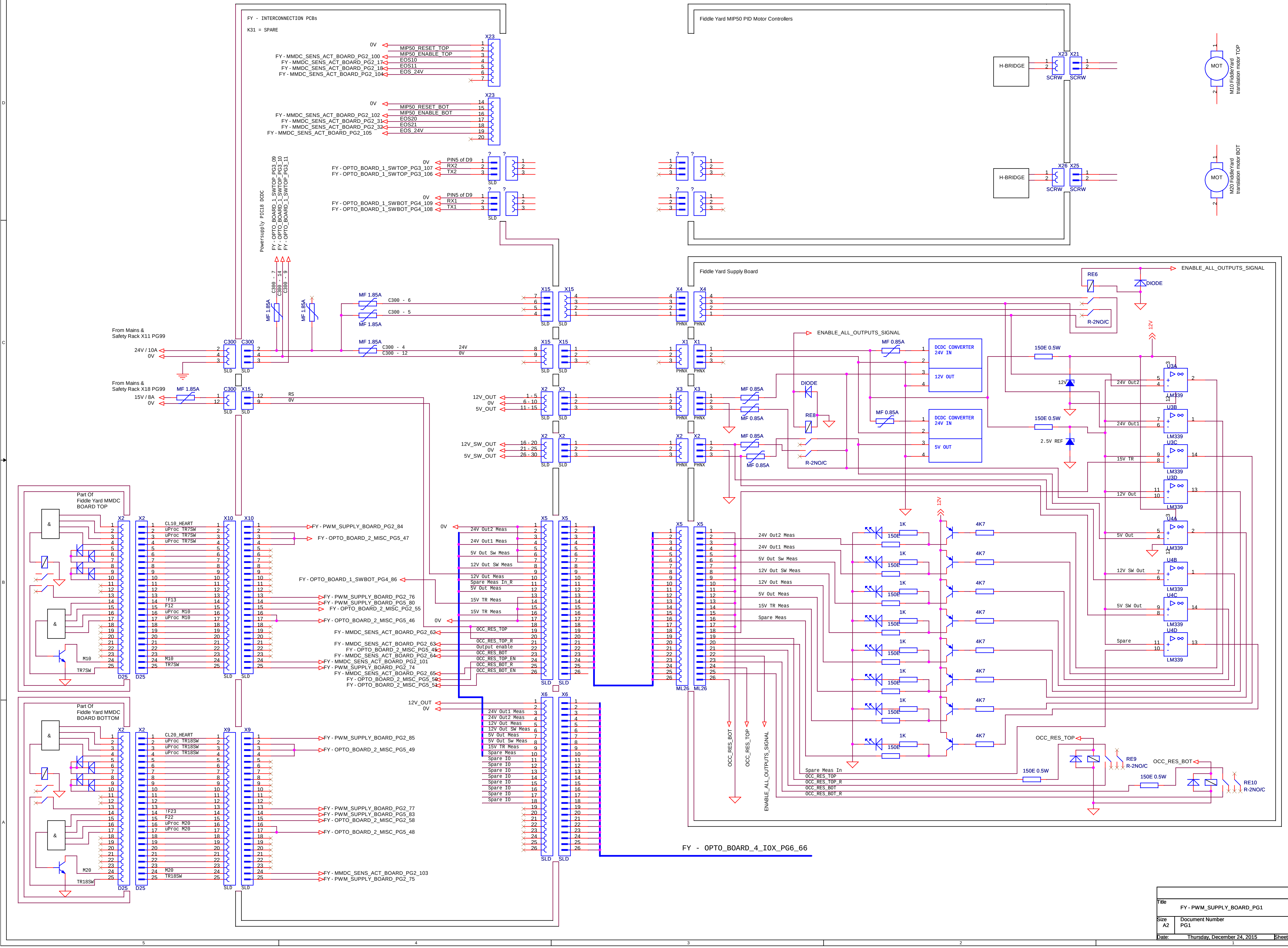
FY - INTERCONNECTION PCBs
K31 = SPARE
Fiddle Yard MIP50 PID Motor Controllers
Fiddle Yard Supply Board
X23
MIP50_RESET_TOP
MIP50_ENABLE_TOP
EOS10
EOS11
EOS_24V
MIP50_RESET_BOT
MIP50_ENABLE_BOT
EOS20
EOS21
FY - MMDC_SENS_ACT_BOARD_PG2_100
FY - MMDC_SENS_ACT_BOARD_PG2_17
FY - MMDC_SENS_ACT_BOARD_PG2_18
FY - MMDC_SENS_ACT_BOARD_PG2_104
FY - MMDC_SENS_ACT_BOARD_PG2_102
FY - MMDC_SENS_ACT_BOARD_PG2_31
FY - MMDC_SENS_ACT_BOARD_PG2_32
FY - MMDC_SENS_ACT_BOARD_PG2_105
PIN5 of D9
RX2
TX2
RX1
TX1
FY - OPTO_BOARD_1_SWTOP_PG3_107
FY - OPTO_BOARD_1_SWTOP_PG3_106
FY - OPTO_BOARD_1_SWBOT_PG4_109
FY - OPTO_BOARD_1_SWBOT_PG4_108
H-BRIDGE
SCRW
MOT
M10 FiddleYard translation motor TOP
M20 FiddleYard translation motor BOT
Powersupply PIC18 DCDC
FY - OPTO_BOARD_1_SWTOP_PG3_09
FY - OPTO_BOARD_1_SWTOP_PG3_10
FY - OPTO_BOARD_1_SWTOP_PG3_11
C300 - 7
C300 - 14
C300 - 9
MF 1.85A
C300 - 6
C300 - 5
C300 - 4
C300 - 12
From Mains & Safety Rack X11 PG99
24V / 10A
0V
From Mains & Safety Rack X18 PG99
15V / 8A
C300
X15
X4
X1
X2
X3
PHNX
SLD
RS
12V_OUT
5V_OUT
12V_SW_OUT
5V_SW_OUT
1 - 5
6 - 10
11 - 15
16 - 20
21 - 25
26 - 30
RE6
DIODE
ENABLE_ALL_OUTPUTS_SIGNAL
R-2NO/C
MF 0.85A
DCDC CONVERTER 24V IN
12V OUT
5V OUT
RE8
150E 0.5W
2.5V REF
LM339
24V Out2
24V Out1
15V TR
12V Out
5V Out
12V SW Out
5V SW Out
Spare
Part Of Fiddle Yard MMDC BOARD TOP
Part Of Fiddle Yard MMDC BOARD BOTTOM
CL10_HEART
uProc TR7SW
!F13
F12
uProc M10
M10
TR7SW
CL20_HEART
uProc TR18SW
!F23
F22
uProc M20
M20
TR18SW
D25
X10
X9
X5
X6
ML26
FY - PWM_SUPPLY_BOARD_PG2_84
FY - OPTO_BOARD_2_MISC_PG5_47
FY - OPTO_BOARD_1_SWBOT_PG4_86
FY - PWM_SUPPLY_BOARD_PG2_76
FY - PWM_SUPPLY_BOARD_PG5_80
FY - OPTO_BOARD_2_MISC_PG2_55
FY - OPTO_BOARD_2_MISC_PG5_46
FY - MMDC_SENS_ACT_BOARD_PG2_62
FY - MMDC_SENS_ACT_BOARD_PG2_63
FY - OPTO_BOARD_2_MISC_PG5_45
FY - MMDC_SENS_ACT_BOARD_PG2_64
FY - MMDC_SENS_ACT_BOARD_PG2_101
FY - PWM_SUPPLY_BOARD_PG2_74
FY - MMDC_SENS_ACT_BOARD_PG2_65
FY - OPTO_BOARD_2_MISC_PG5_50
FY - OPTO_BOARD_2_MISC_PG5_51
FY - PWM_SUPPLY_BOARD_PG2_85
FY - OPTO_BOARD_2_MISC_PG5_49
FY - PWM_SUPPLY_BOARD_PG2_77
FY - PWM_SUPPLY_BOARD_PG5_83
FY - OPTO_BOARD_2_MISC_PG2_58
FY - OPTO_BOARD_2_MISC_PG5_48
FY - MMDC_SENS_ACT_BOARD_PG2_103
FY - PWM_SUPPLY_BOARD_PG2_75
24V Out2 Meas
24V Out1 Meas
5V Out Sw Meas
12V Out Sw Meas
12V Out Meas
Spare Meas In_R
5V Out Meas
15V TR Meas
OCC_RES_TOP
OCC_RES_TOP_R
Output enable
OCC_RES_BOT
OCC_RES_TOP_EN
OCC_RES_BOT_R
OCC_RES_BOT_EN
Spare IO
Spare Meas
Spare Meas In
1K
150E
4K7
RE9
RE10
OCC_RES_BOT
OCC_RES_TOP
ENABLE_ALL_OUTPUTS_SIGNAL
FY - OPTO_BOARD_4_IOX_PG6_66

Title
FY - PWM_SUPPLY_BOARD_PG1

Size	Document Number	Rev
A2	PG1	1.0

Date: Thursday, December 24, 2015 Sheet 1 of 1

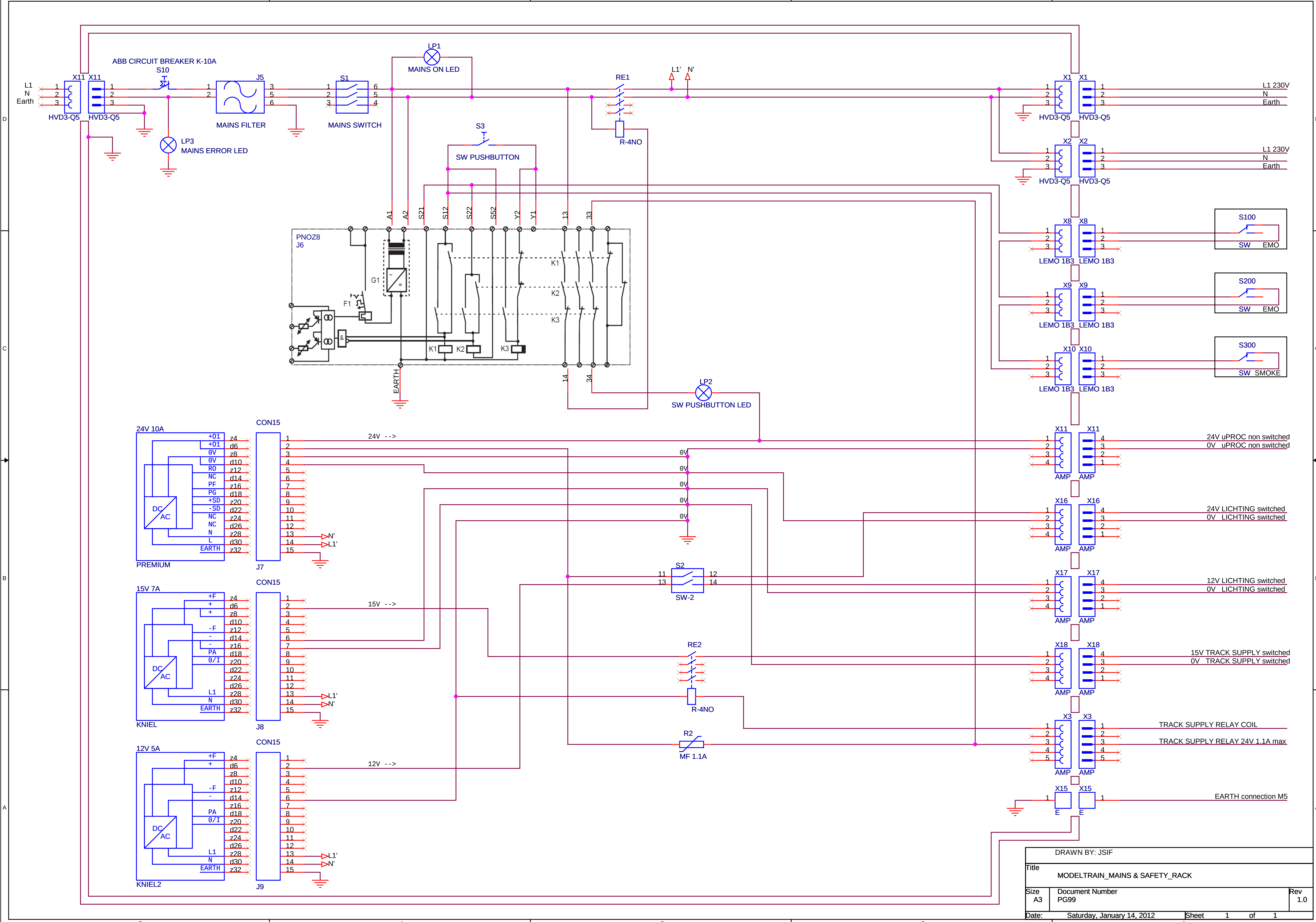
L1
N
Earth
X11
HVD3-Q5
ABB CIRCUIT BREAKER K-10A
S10
J5
MAINS FILTER
LP3
MAINS ERROR LED
S1
MAINS SWITCH
LP1
MAINS ON LED
S3
SW PUSHBUTTON
RE1
R-4NO
L1'
N'
X1
X2
L1 230V
N
Earth
PNOZ8
J6
G1
F1
K1
K2
K3
A1
A2
S21
S12
S22
S52
Y2
Y1
13
33
14
34
EARTH
X8
X9
X10
LEMO 1B3
S100
S200
S300
SW
EMO
SMOKE
LP2
SW PUSHBUTTON LED
24V 10A
PREMIUM
CON15
J7
24V -->
0V
X11
AMP
24V uPROC non switched
0V uPROC non switched
X16
24V LICHTING switched
0V LICHTING switched
S2
SW-2
X17
12V LICHTING switched
0V LICHTING switched
15V 7A
KNIEL
J8
15V -->
RE2
R-4NO
X18
15V TRACK SUPPLY switched
0V TRACK SUPPLY switched
R2
MF 1.1A
X3
TRACK SUPPLY RELAY COIL
TRACK SUPPLY RELAY 24V 1.1A max
12V 5A
KNIEL2
J9
12V -->
DC
AC
X15
E
EARTH connection M5

DRAWN BY: JSIF

Title
MODELTRAIN_MAINS & SAFETY_RACK

Size A3
Document Number PG99
Rev 1.0

Date: Saturday, January 14, 2012
Sheet 1 of 1