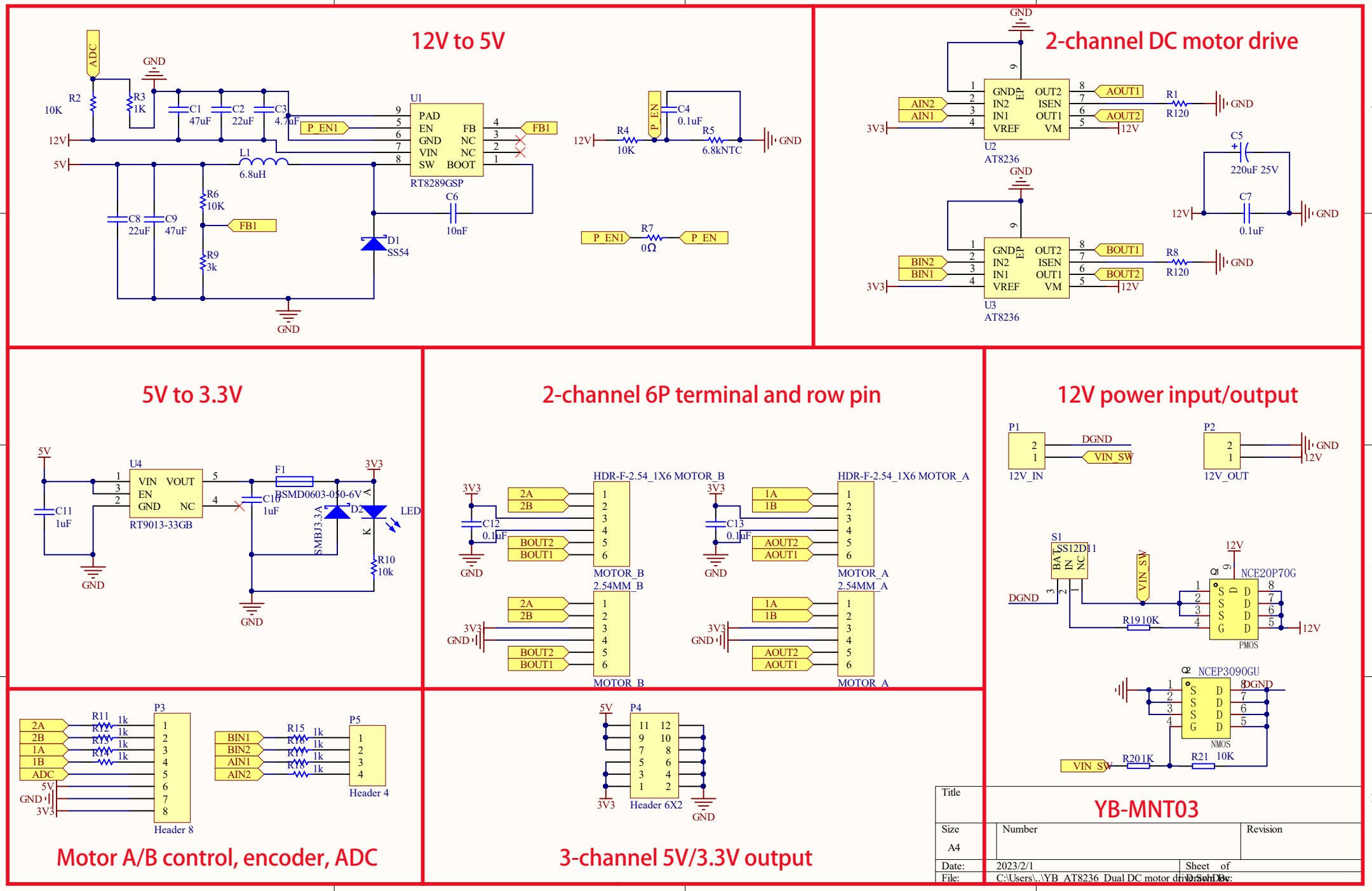
12V to 5V
ADC
GND
R2
10K
R3
1K
C1
47uF
C2
22uF
C3
4.7uF
12V
5V
L1
6.8uH
U1
PAD
EN
GND
VIN
SW
FB
NC
NC
BOOT
RT8289GSP
P_EN1
FB1
C6
10nF
R6
10K
C8
22uF
C9
47uF
R9
3k
D1
SS54
R4
10K
P_EN
C4
0.1uF
R5
6.8kNTC
R7
0Ω
2-channel DC motor drive
U2
AT8236
U3
AT8236
AIN2
AIN1
BIN2
BIN1
3V3
AOUT1
AOUT2
BOUT1
BOUT2
R1
R120
R8
R120
C5
220uF 25V
C7
0.1uF
5V to 3.3V
U4
VIN
EN
GND
VOUT
NC
RT9013-33GB
C11
1uF
C10
1uF
F1
SMD0603-050-6V
SMBJ3.3A
D2
LED
3V3
R10
10k
2-channel 6P terminal and row pin
HDR-F-2.54_1X6 MOTOR_B
HDR-F-2.54_1X6 MOTOR_A
C12
0.1uF
C13
0.1uF
2A
2B
1A
1B
BOUT2
BOUT1
AOUT2
AOUT1
MOTOR_B
MOTOR_A
2.54MM_B
2.54MM_A
12V power input/output
P1
12V_IN
DGND
VIN_SW
P2
12V_OUT
S1
SS12D11
BAT
IN
NC
R191 0K
Q1
NCE20P70G
PMOS
Q2
NCEP3090GU
NMOS
R20 1K
R21 10K
Motor A/B control, encoder, ADC
P3
Header 8
R11 1k
R12 1k
R13 1k
R14 1k
ADC
P5
Header 4
R15 1k
R16 1k
R17 1k
R18 1k
3-channel 5V/3.3V output
P4
Header 6X2
Title
YB-MNT03
Size
A4
Number
Revision
Date: 2023/2/1
Sheet of
File: C:\Users\..\YB_AT8236_Dual DC motor driver.SchDoc
Drawn By: