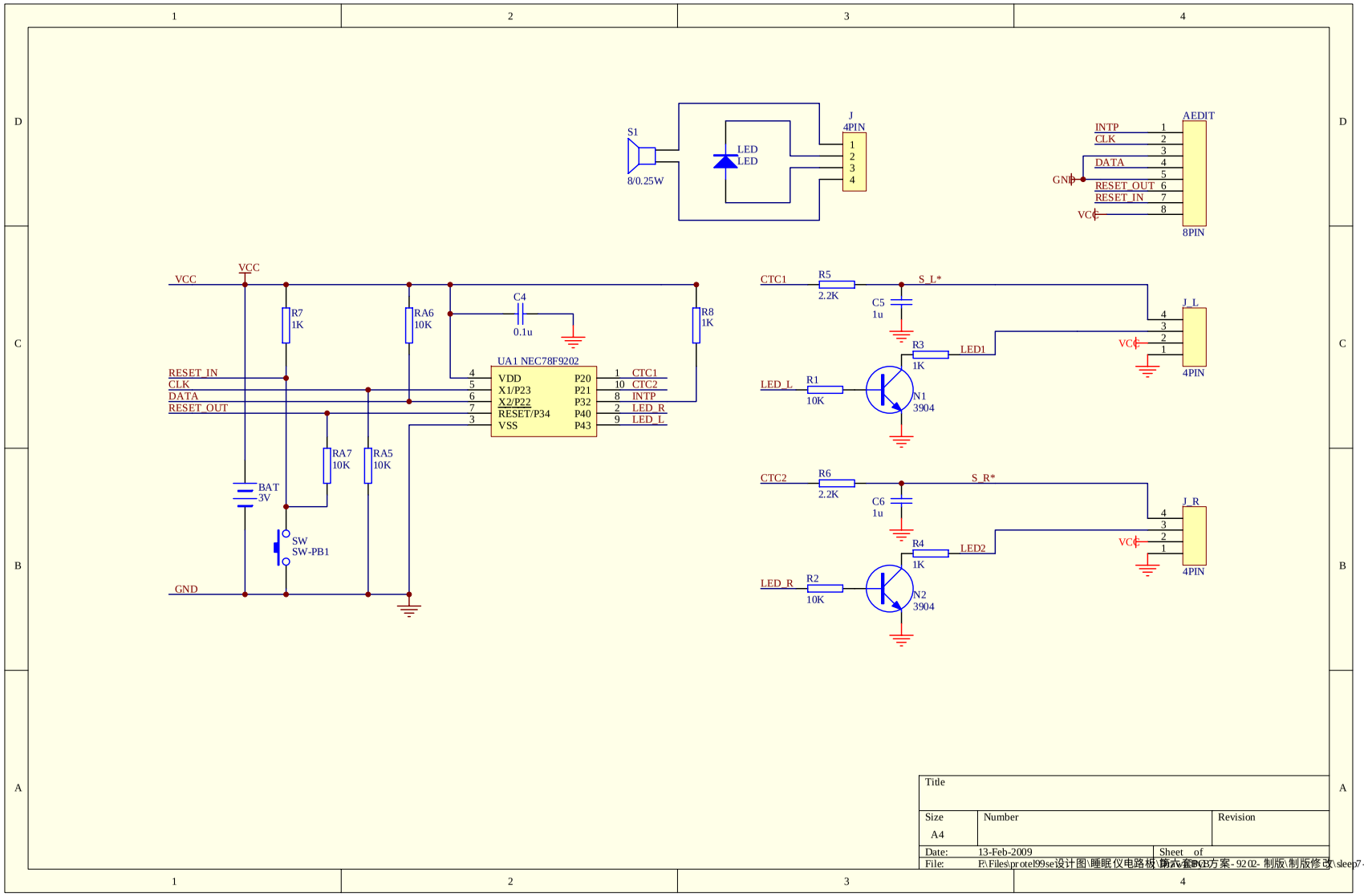
S1
8/0.25W
LED
LED
J
4PIN
1
2
3
4
AEDIT
INTP 1
CLK 2
3
DATA 4
5
GND
RESET_OUT 6
RESET_IN 7
VCC 8
8PIN
VCC
VCC
R7
1K
RA6
10K
C4
0.1u
R8
1K
UA1 NEC78F9202
RESET_IN
CLK
DATA
RESET_OUT
4
5
6
7
3
VDD
X1/P23
X2/P22
RESET/P34
VSS
P20
P21
P32
P40
P43
1 CTC1
10 CTC2
8 INTP
2 LED_R
9 LED_L
RA7
10K
RA5
10K
BAT
3V
SW
SW-PB1
GND
CTC1
R5
2.2K
S_L*
C5
1u
R3
1K
LED1
LED_L
R1
10K
N1
3904
J_L
4
3
2
1
VCC
4PIN
CTC2
R6
2.2K
S_R*
C6
1u
R4
1K
LED2
LED_R
R2
10K
N2
3904
J_R
4
3
2
1
VCC
4PIN
Title
Size
A4
Number
Revision
Date: 13-Feb-2009
Sheet of
File: F:\Files\protel99se设计图\睡眠仪电路板\第六套PCB方案-9202- 制版\制版修改\sleep7 - 根据美方意见及样品情况修改