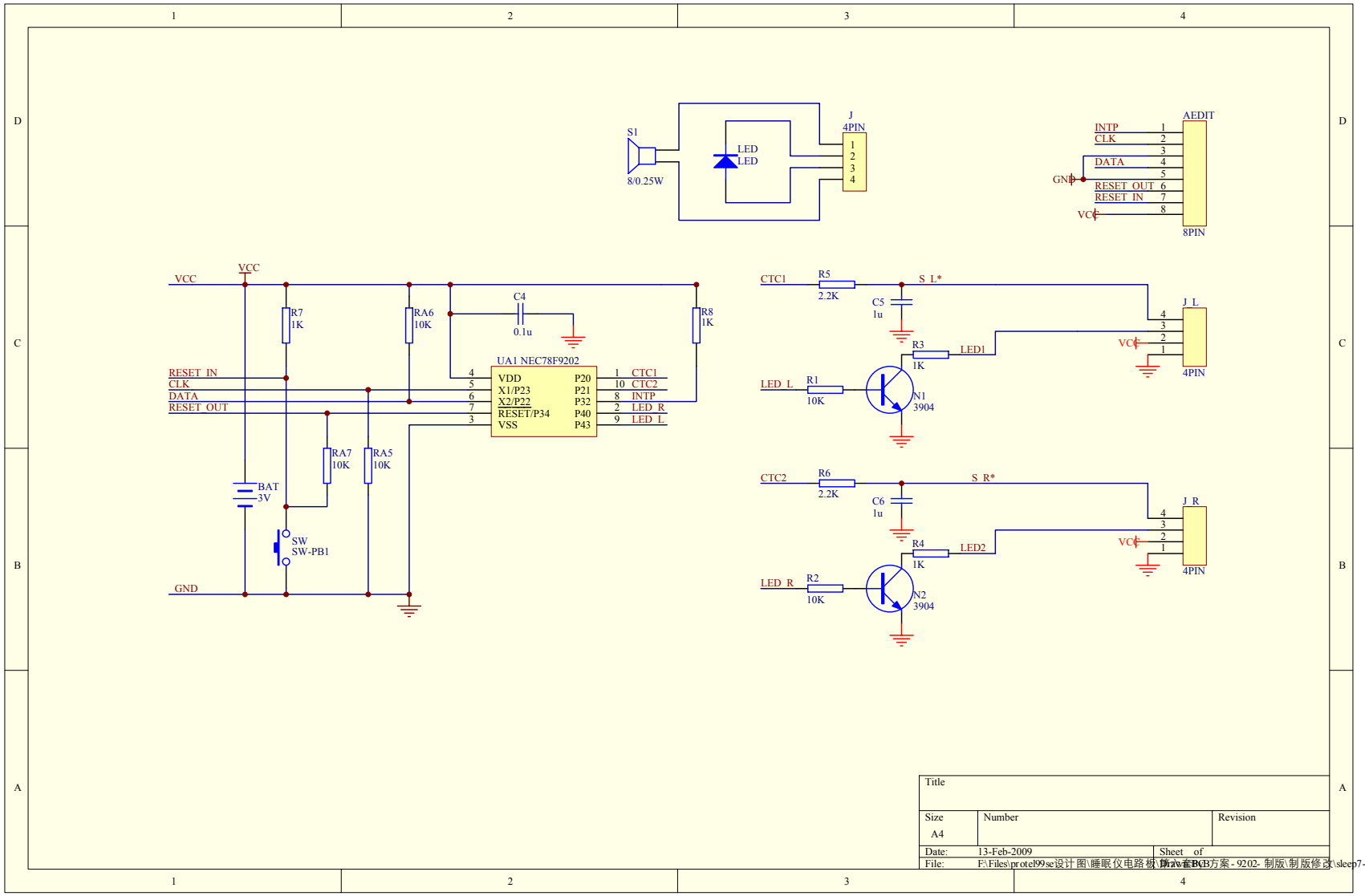

Title		
Size A4	Number	Revision
Date: 13-Feb-2009	Sheet of	
File: F:\Files\protel99se设计图\睡眠仪电路板\Pcb\EBC方案-9202-制版\制版修改\sleep7-根据美方意见及样品情况修	Drawn By:	