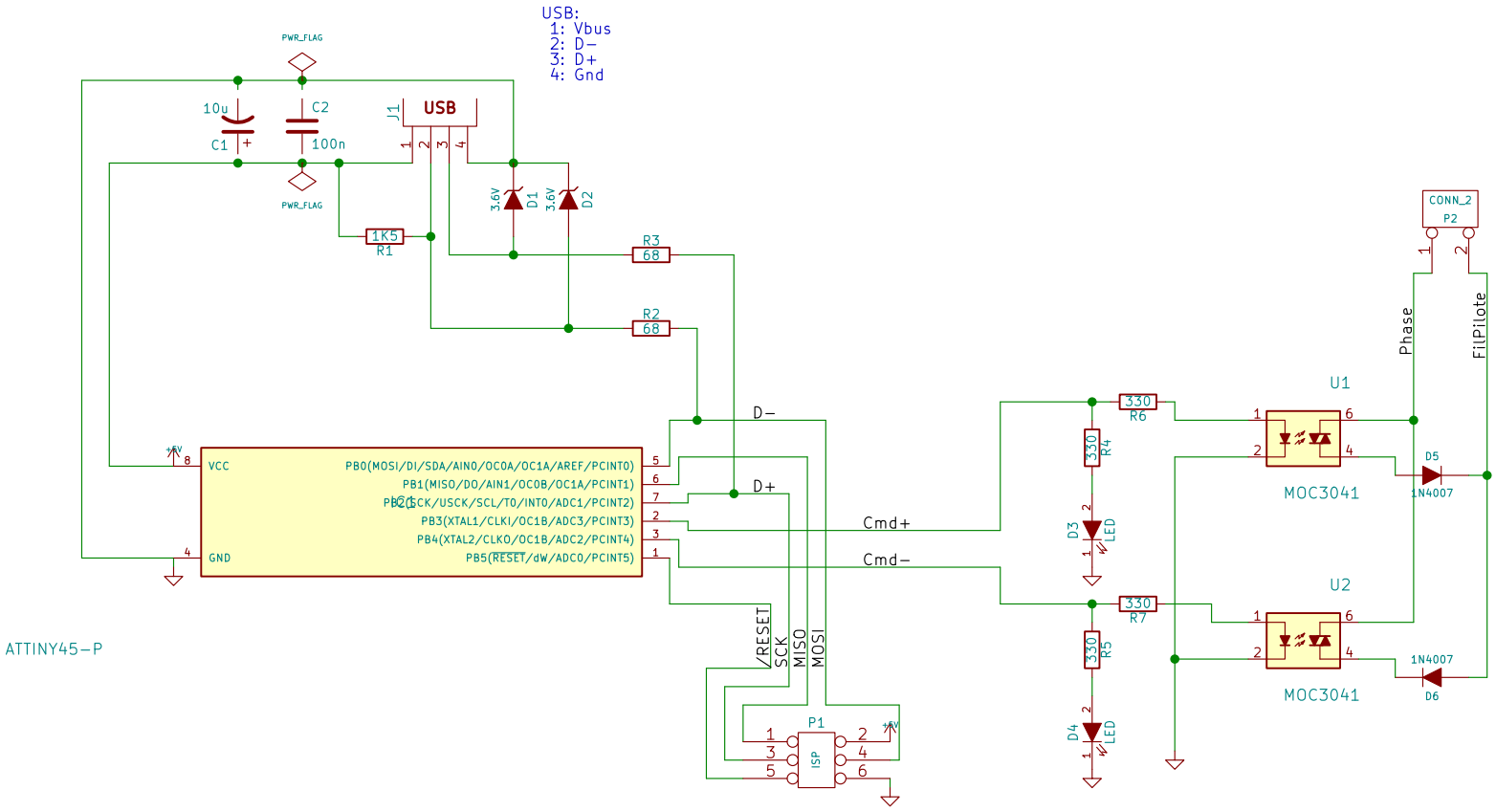

Sheet: /
File: usb.sch

Title: Commande USB d'un fil pilote

Size: A4	Date: 27 dec 2012	Rev:
KiCad E.D.A. kicad (2014−09−02 BZR 5112)−product		Id: 1/1