US 20250259676A1

(19) United States
(12) Patent Application Publication
Harthcock
(10) Pub. No.: US 2025/0259676 A1
(43) Pub. Date: Aug. 14, 2025

(54) **COMPLEX NANOSTRUCTURE FORMING A TRANSISTOR**

(71) Applicant: **Jerry D. Harthcock**, Corpus Christi, TX (US)

(72) Inventor: **Jerry D. Harthcock**, Corpus Christi, TX (US)

(21) Appl. No.: **19/195,998**

(22) Filed: **May 1, 2025**

Related U.S. Application Data

(62) Division of application No. 17/350,805, filed on Jun. 17, 2021, now Pat. No. 12,324,295.

(60) Provisional application No. 63/053,907, filed on Jul. 20, 2020.

Publication Classification

(51) **Int. Cl.**

G11C 13/02	(2006.01)
B82Y 5/00	(2011.01)
B82Y 30/00	(2011.01)
B82Y 40/00	(2011.01)
H10K 10/00	(2023.01)
H10K 10/40	(2023.01)
H10K 85/00	(2023.01)
H10K 85/20	(2023.01)

(52) **U.S. Cl.**

CPC ***G11C 13/025*** (2013.01); ***H10K 10/00*** (2023.02); ***H10K 85/221*** (2023.02); ***H10K 85/761*** (2023.02); *B82Y 5/00* (2013.01); *B82Y 30/00* (2013.01); *B82Y 40/00* (2013.01); *H10K 10/40* (2023.02)

(57) **ABSTRACT**

A complex nanostructure, which includes a first nanostructure component having at least one aperture in a side thereof; at least one second nanostructure component having a first end and a second end, wherein the first end of each of the at least one second nanostructure is inserted through a corresponding one of the at least one aperture in the first nanostructure, thereby forming at least one junction. Embodiments of the complex nanostructure include a bifurcated nanostructure transistor constructed of linear carbon nanotubes, a multiplexer constructed of a circular carbon nanotube and multiple linear carbon nanotubes, and an information unfolder constructed of linear or a combination of linear and circular carbon nanotubes. The nanotubes may optionally be decorated with genetic material such as single-strand or double-strand human DNA segments and/or may be modified by e-beam or ozone gas to add defects into the nanotubes to alter electrical/functional characteristics.

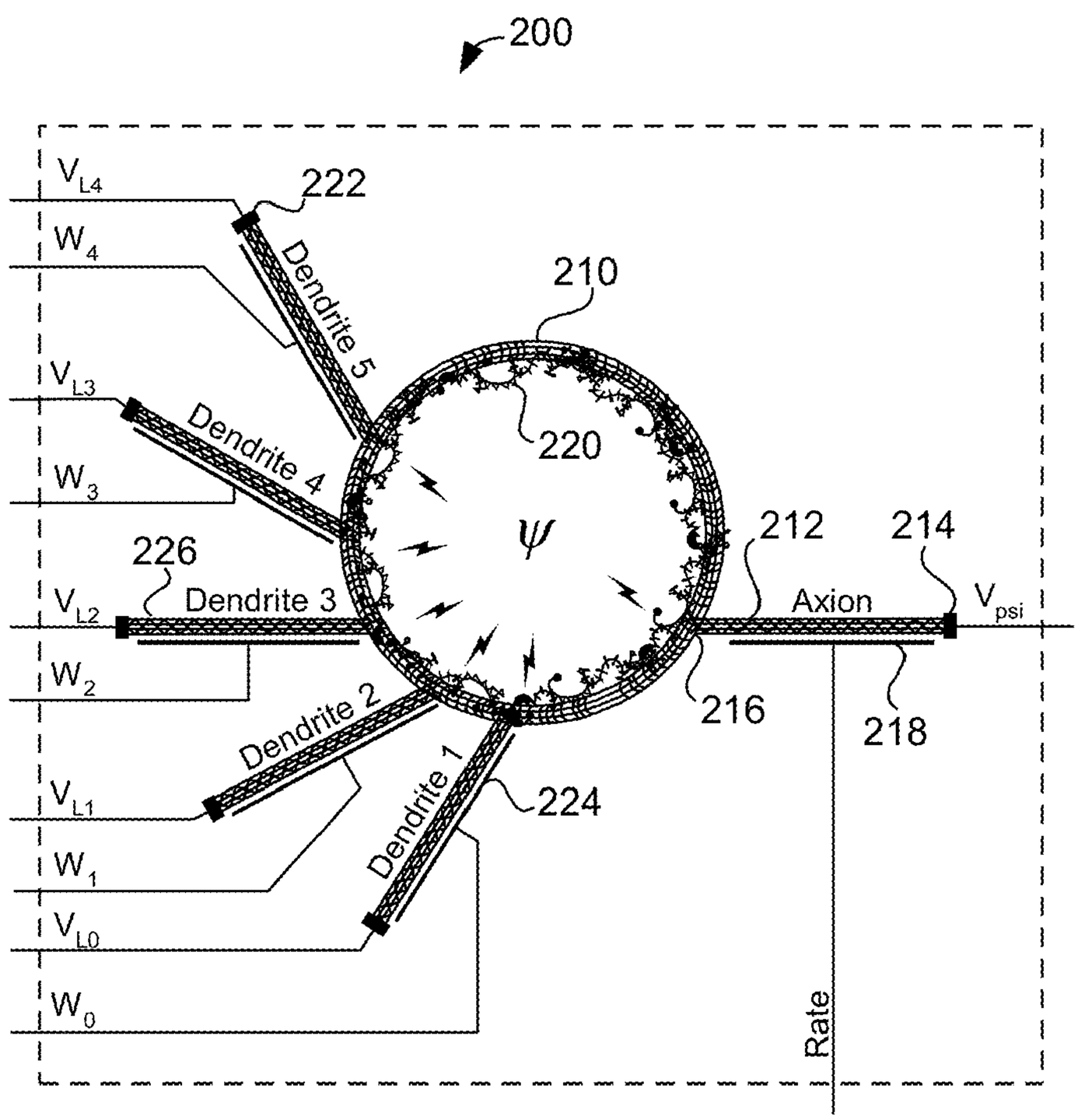

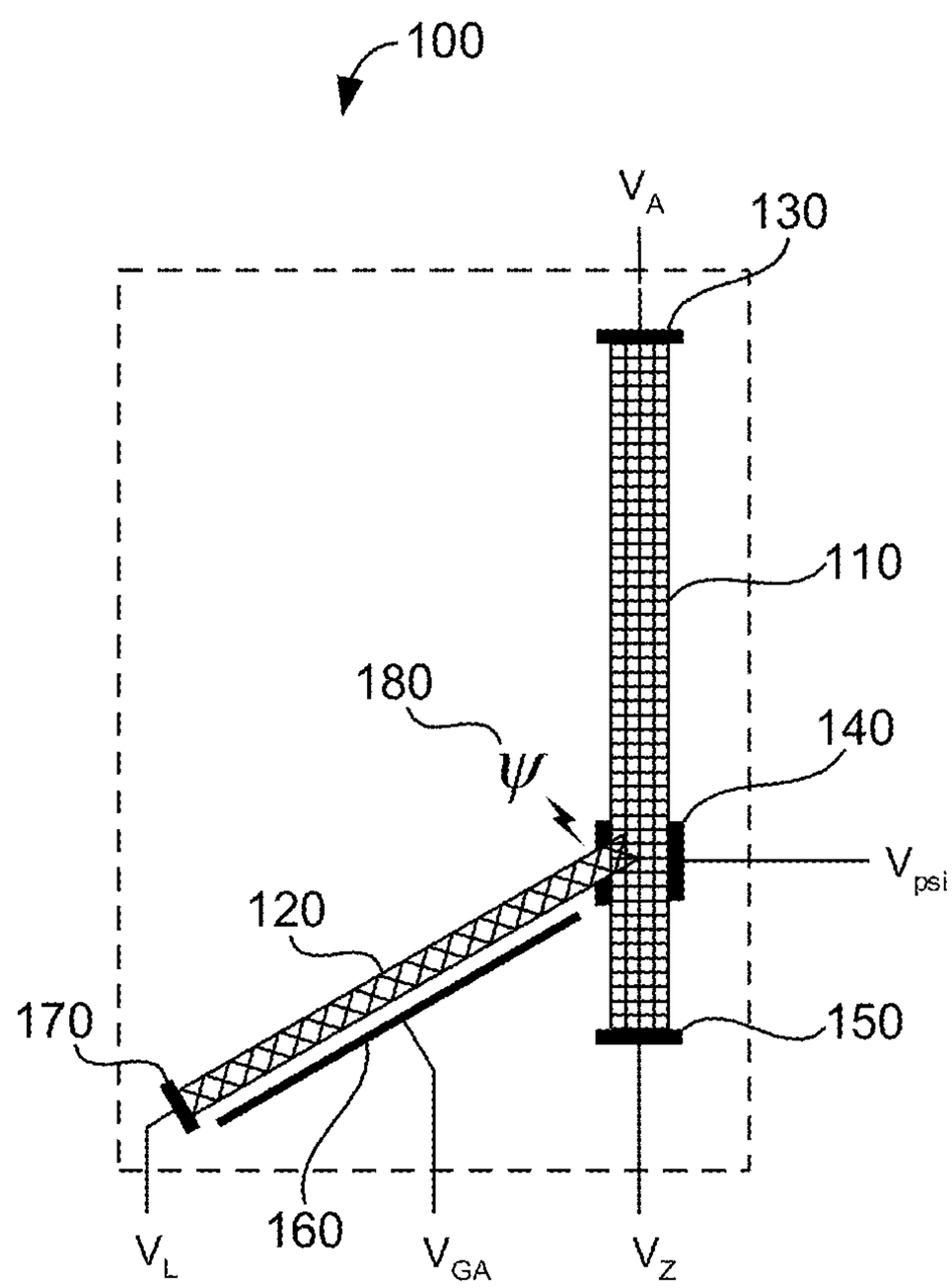

FIG. 1a

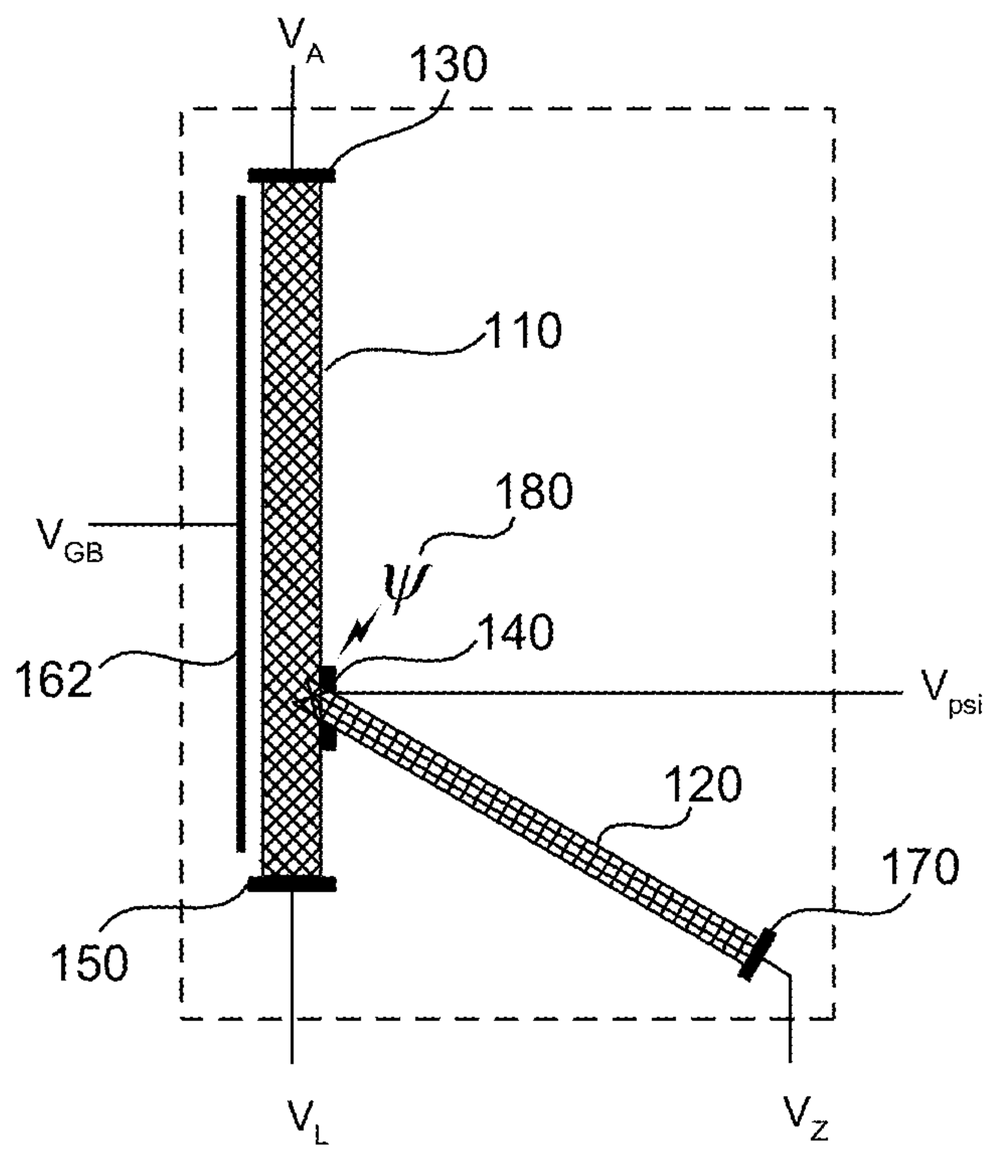

FIG. 1b

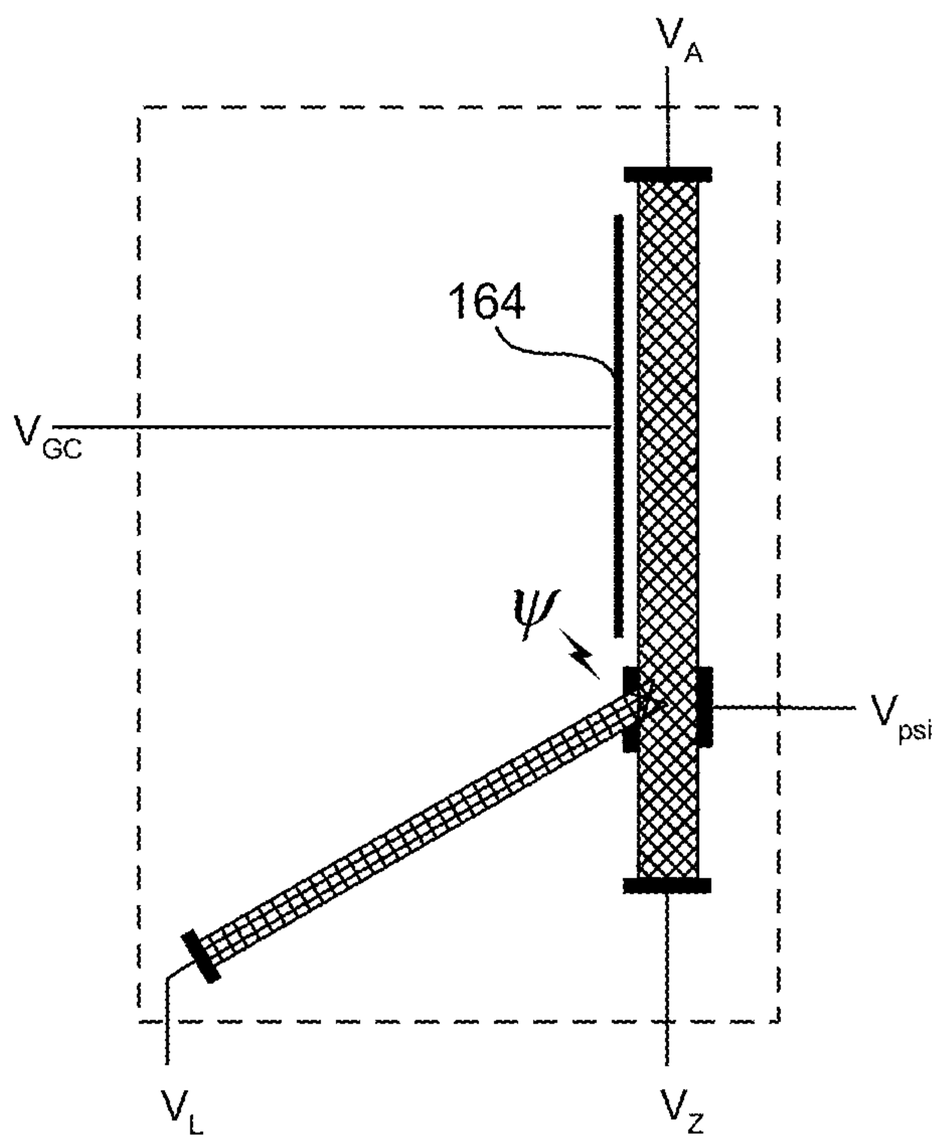

FIG. 1c

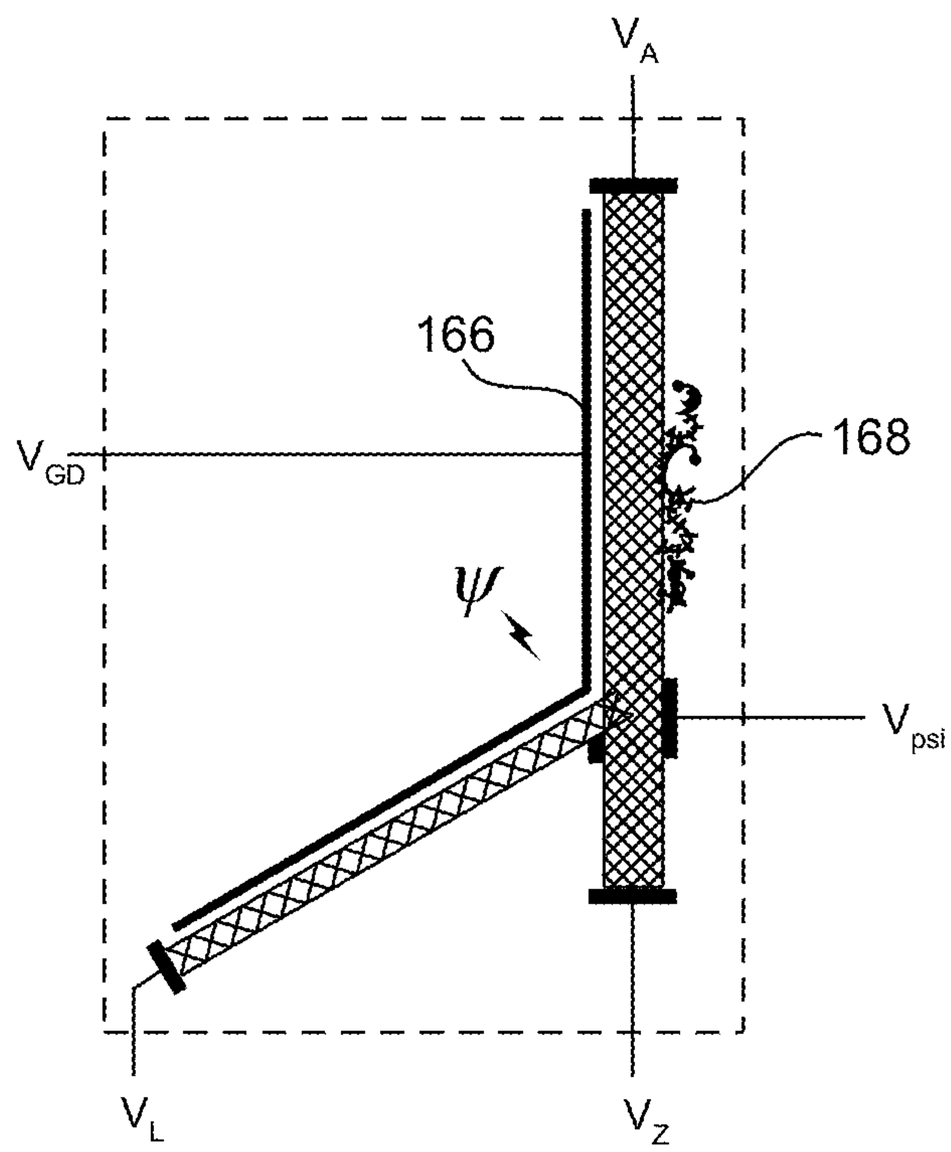

FIG. 1d

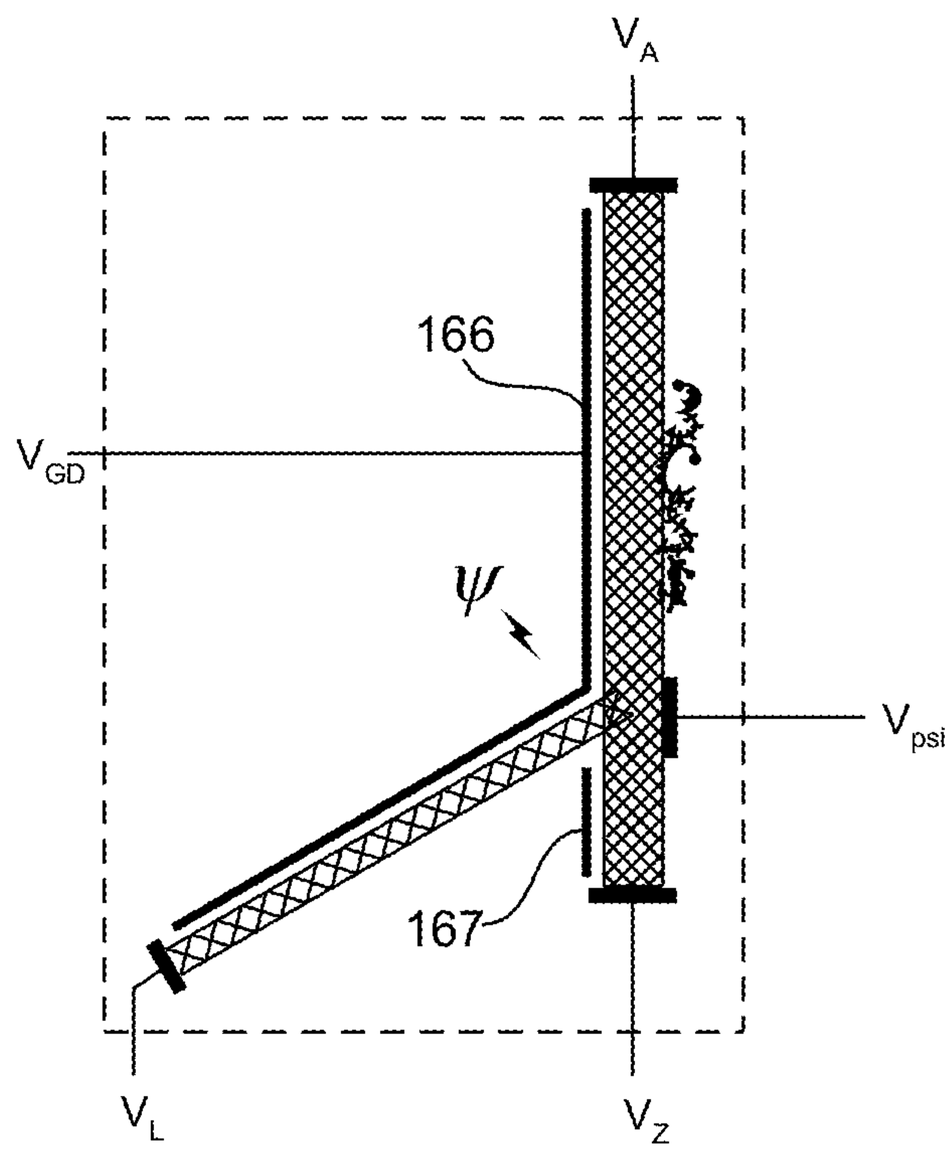

FIG. 1e

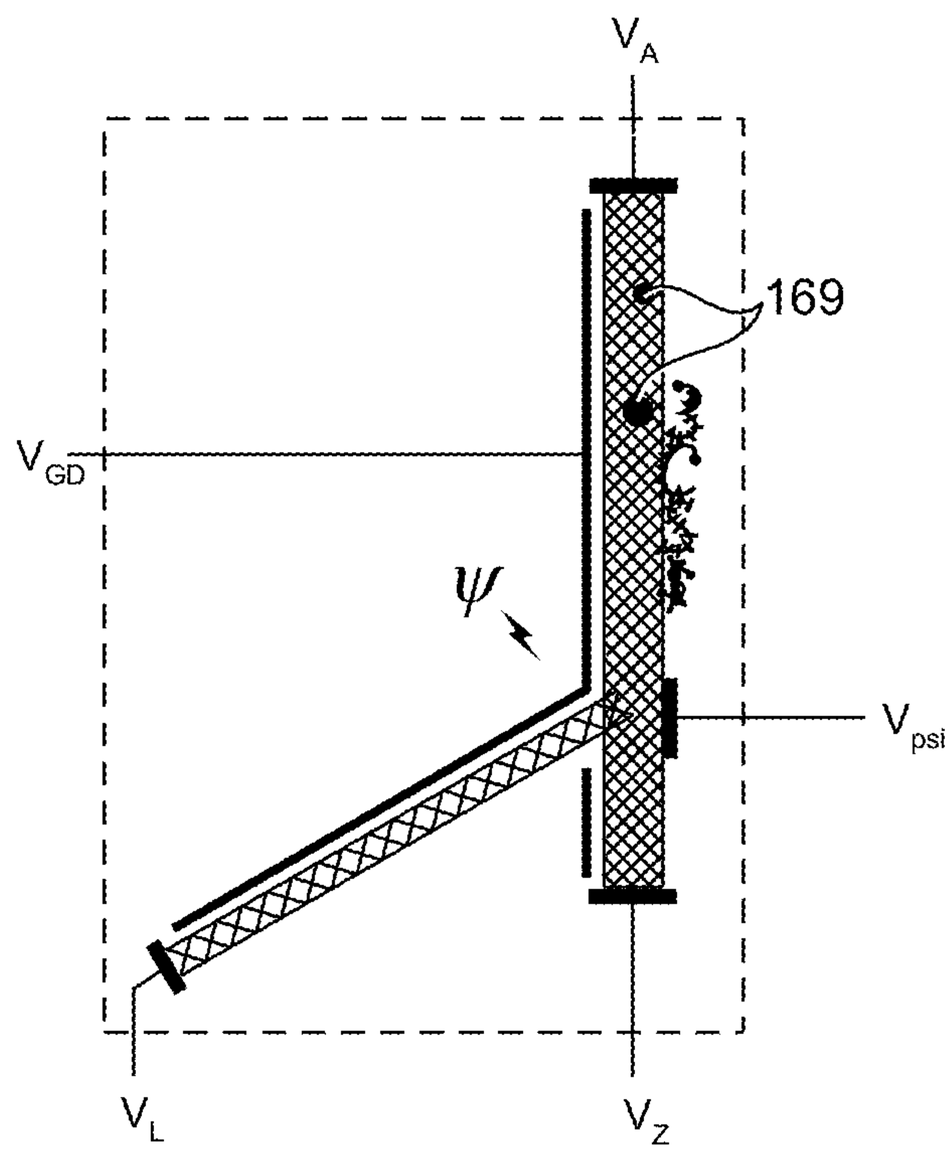

FIG. 1f

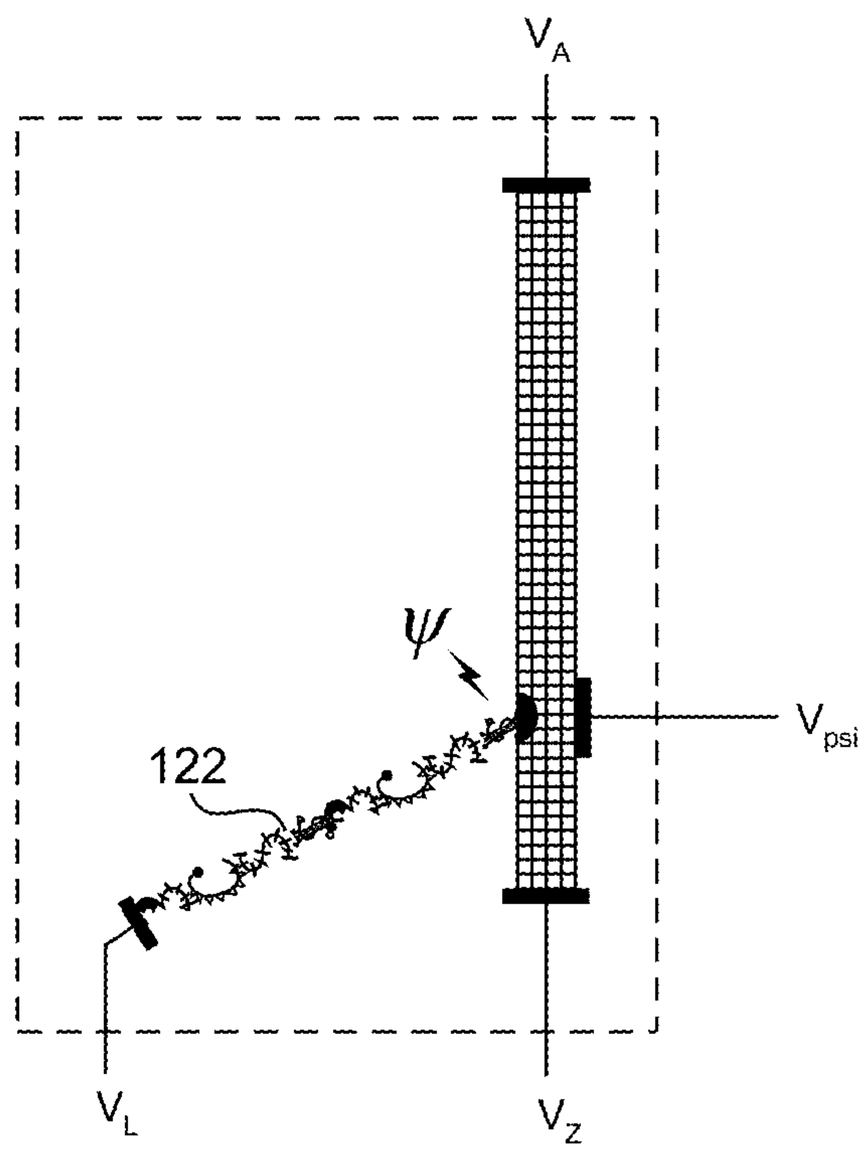

FIG. 1g

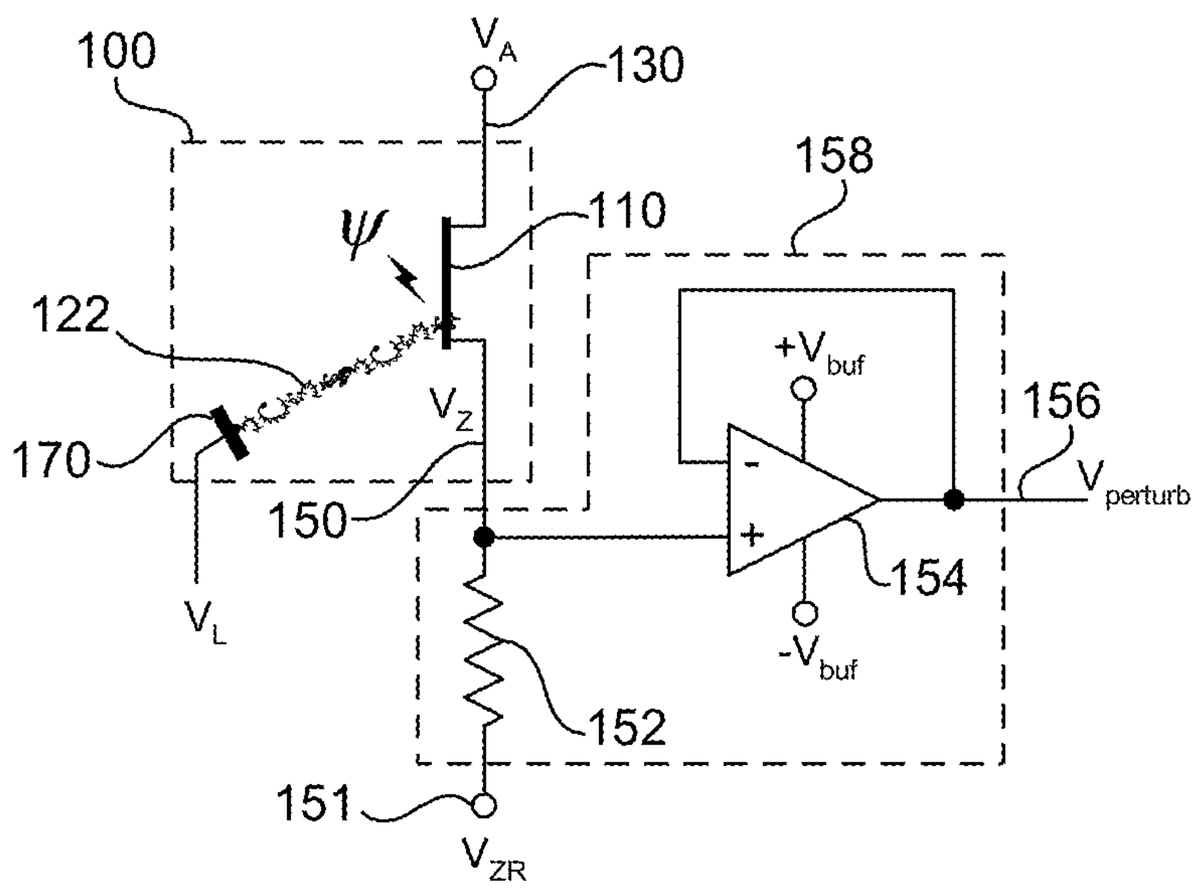
100
V_A
130
158
110
ψ
122
$+V_{buf}$
156
V_Z
170
$V_{perturb}$
150
154
V_L
$-V_{buf}$
152
151
V_{ZR}

FIG. 1h

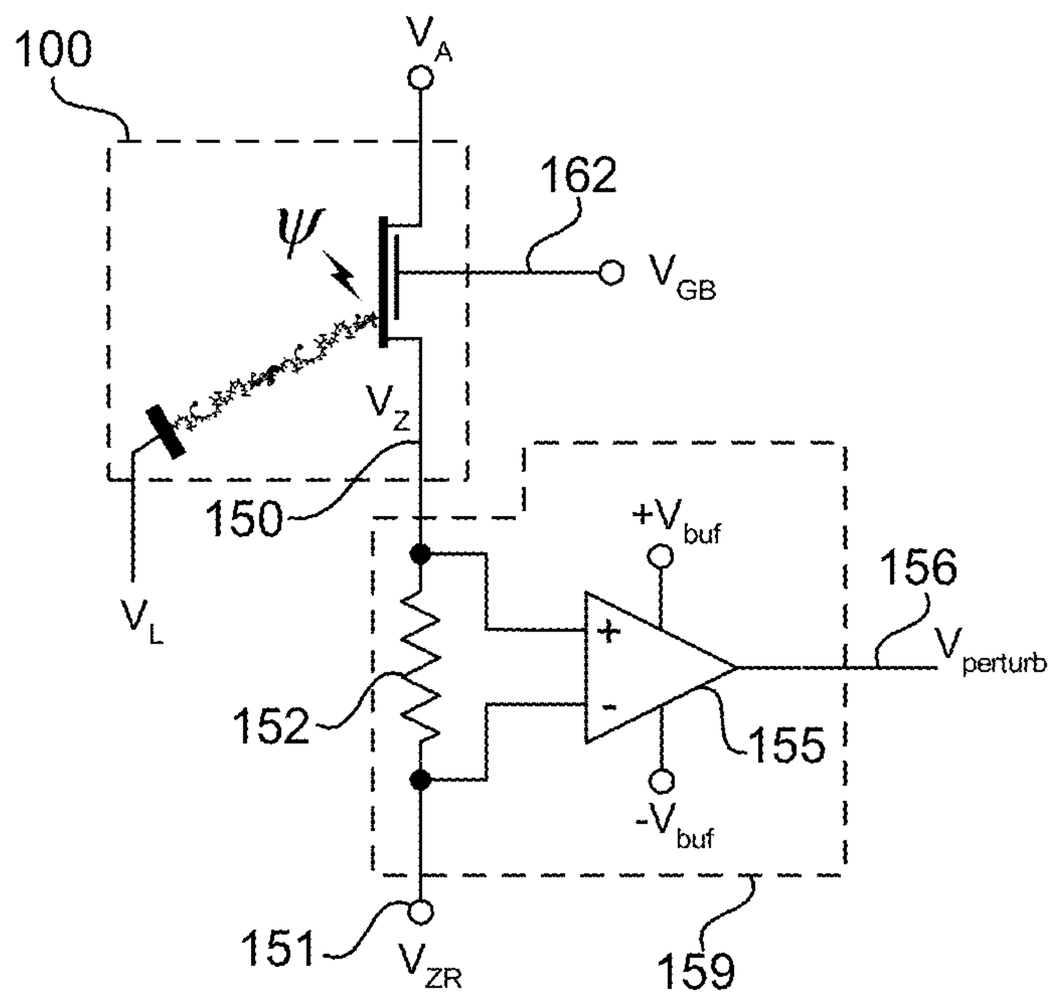
100
V_A
162
ψ
V_{GB}
V_Z
150
V_L
$+V_{buf}$
156
$V_{perturb}$
152
155
$-V_{buf}$
151
V_{ZR}
159

FIG. 1i

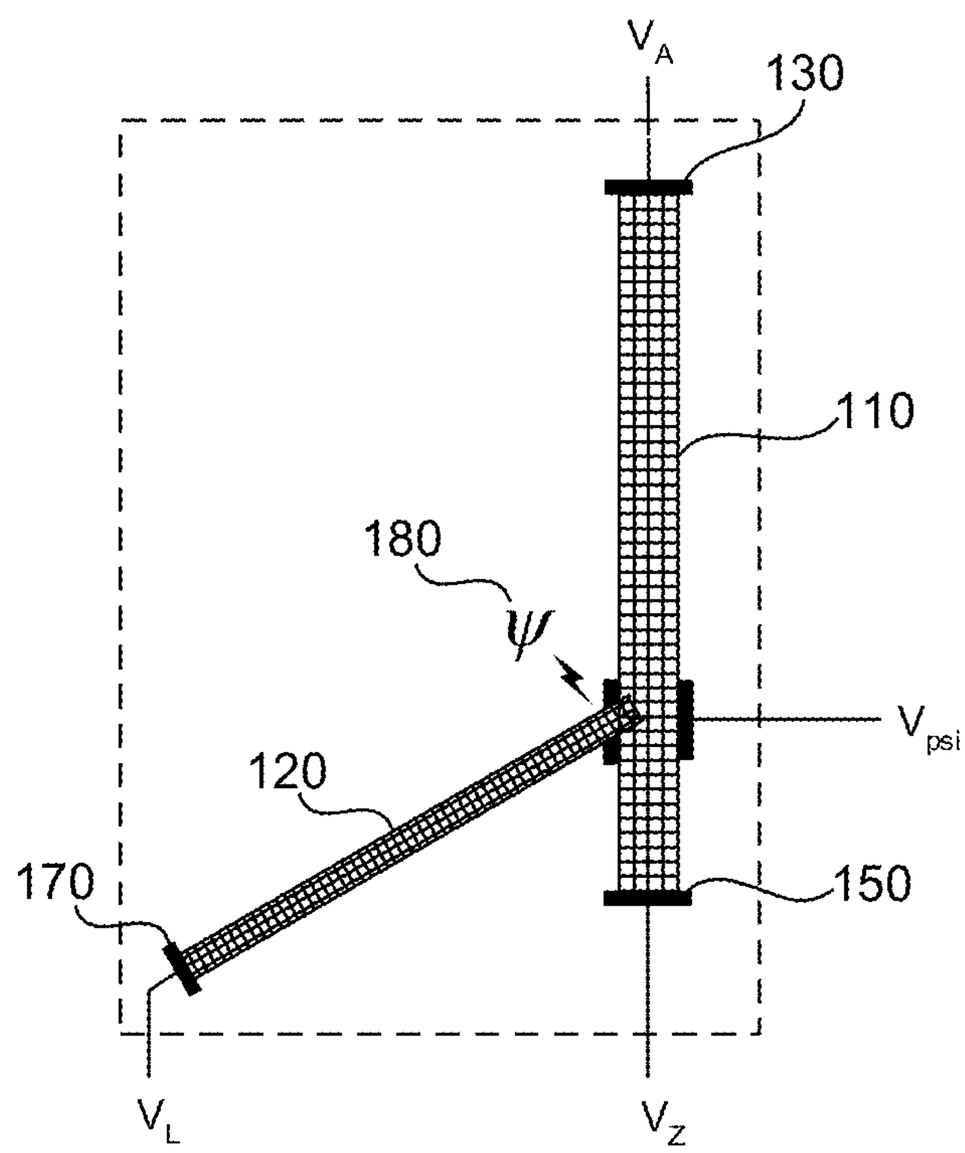

FIG. 1j

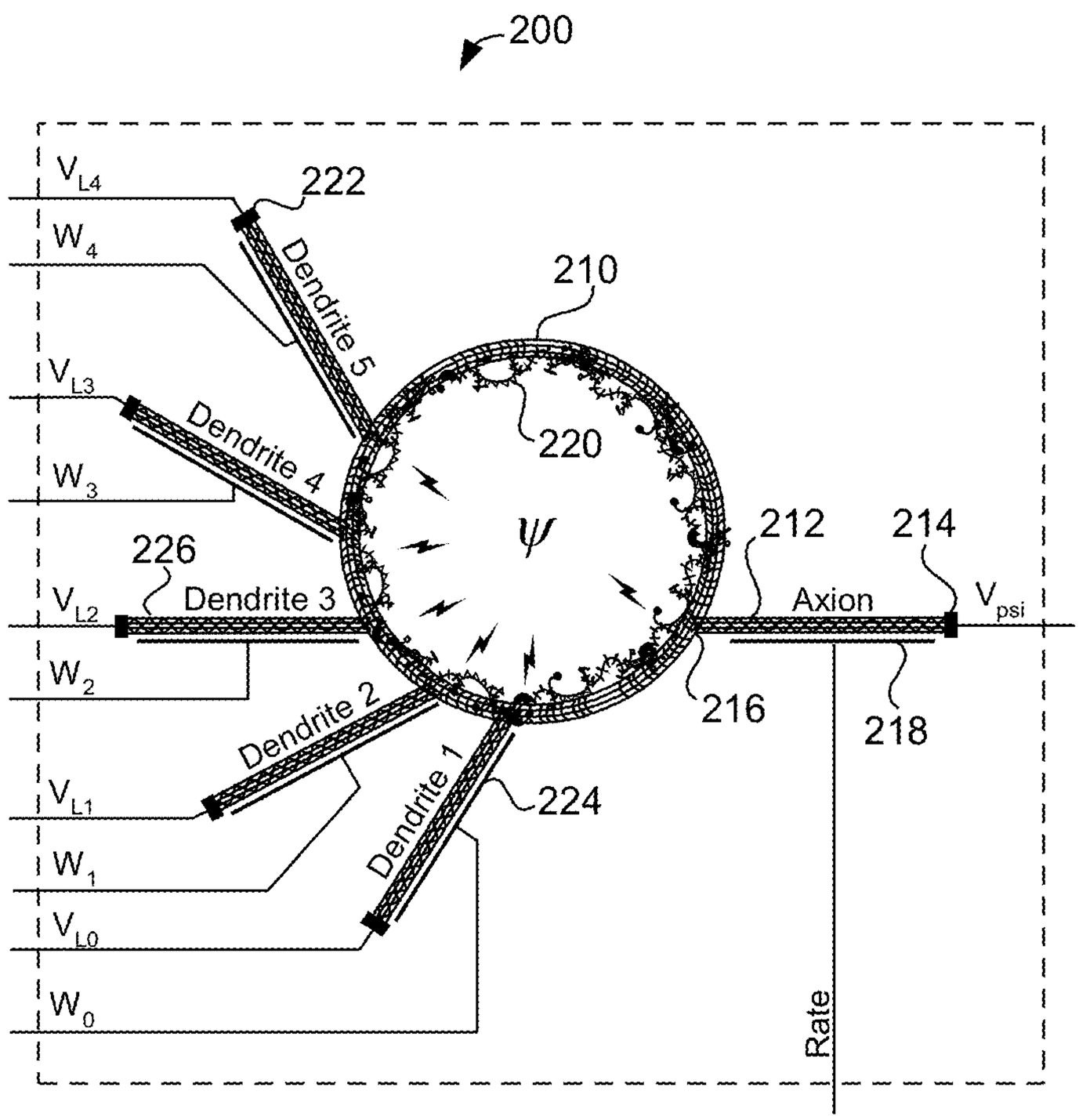
200
V_{L4}
222
W_4
Dendrite 5
210
V_{L3}
Dendrite 4
220
W_3
ψ
212
214
226
V_{L2}
Dendrite 3
Axion
V_{psi}
W_2
216
218
Dendrite 2
Dendrite 1
V_{L1}
224
W_1
V_{L0}
W_0
Rate

FIG. 2

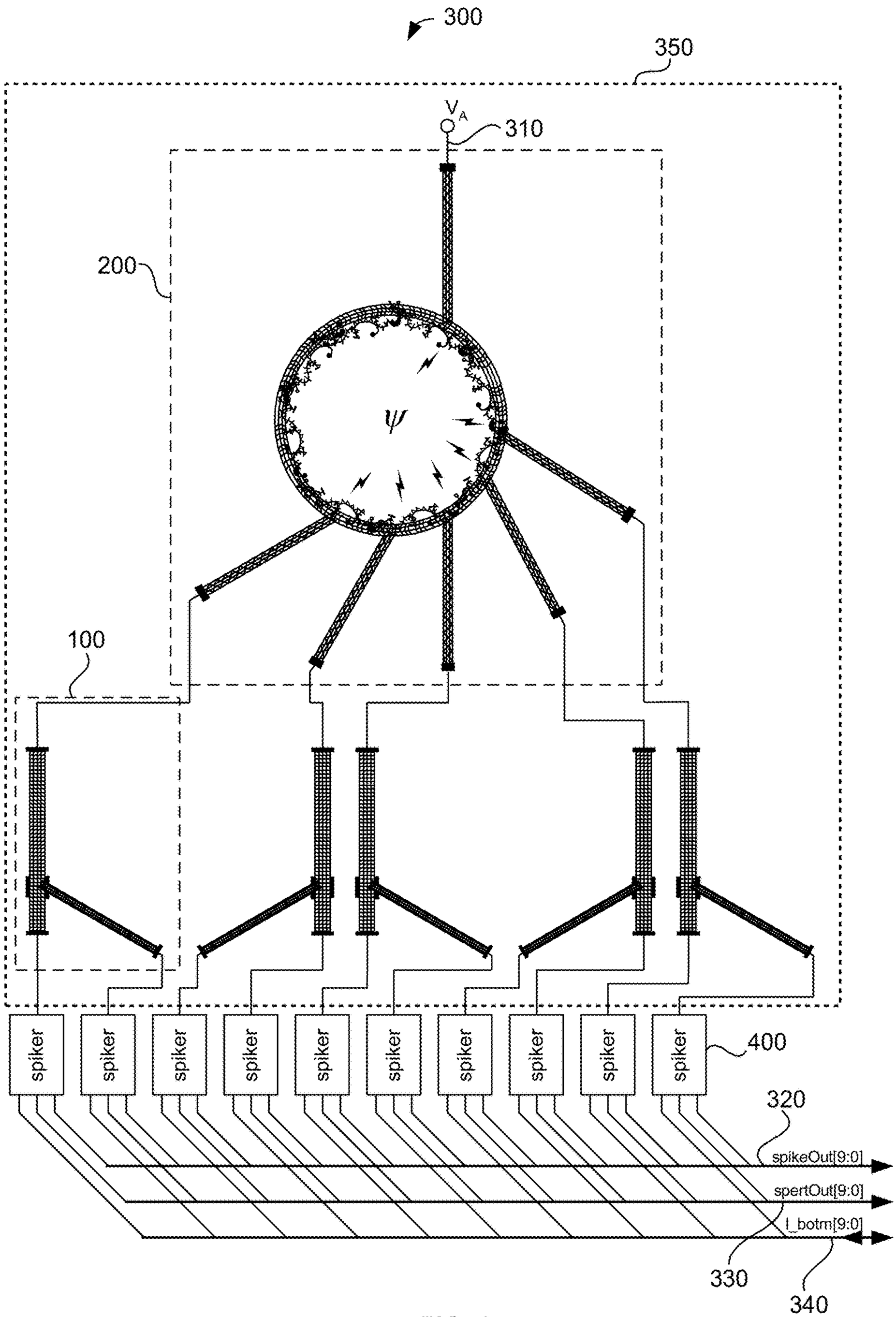
300
350
V_A
310
200
ψ
100
spiker
400
320
spikeOut[9:0]
spertOut[9:0]
I_botm[9:0]
330
340

FIG. 3

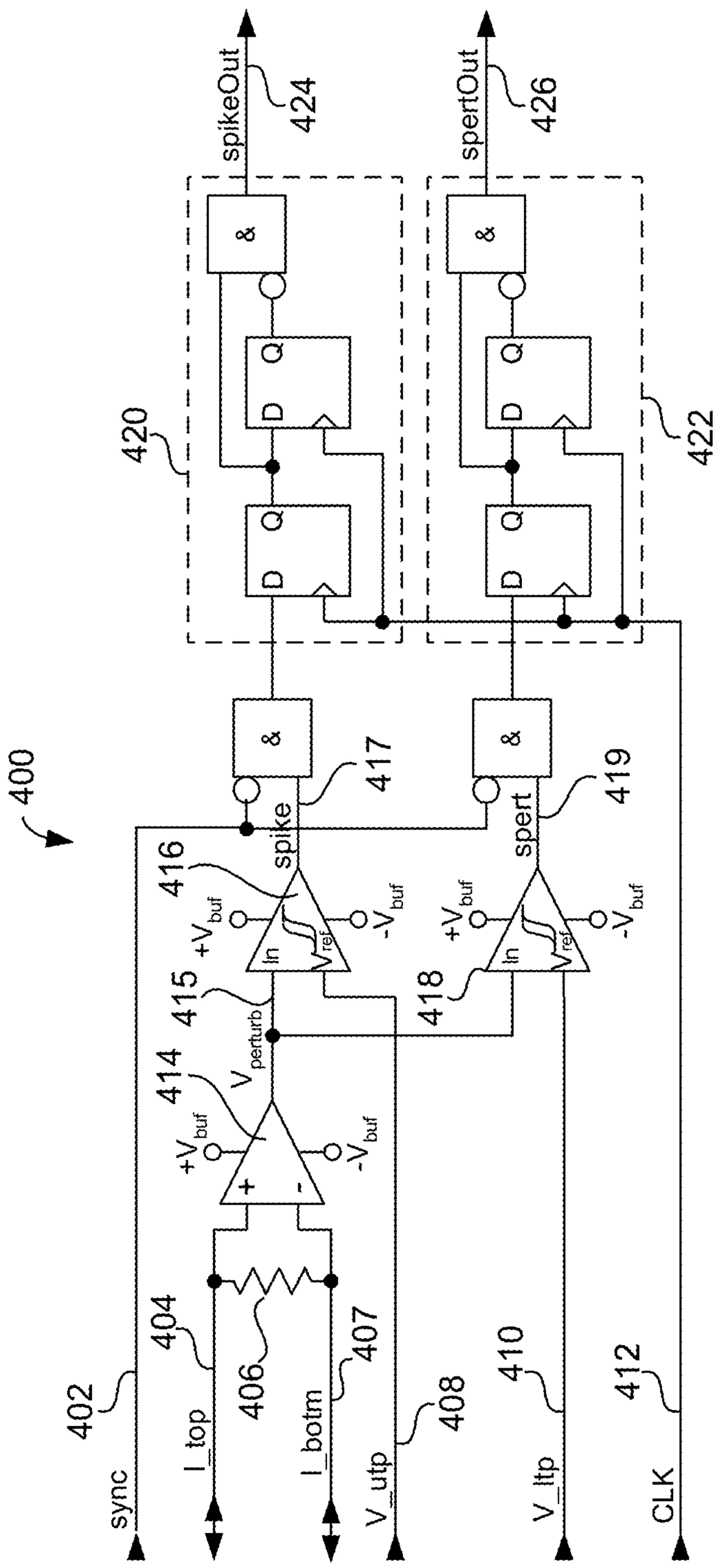
400
402
sync
404
I_top
406
407
I_botm
408
V_utp
410
V_ltp
412
CLK
414
415
416
417
418
419
420
422
424
426
spike
spert
spikeOut
spertOut
&
D
Q
In
V_{ref}
$V_{perturb}$
$+V_{buf}$
$-V_{buf}$

FIG. 4

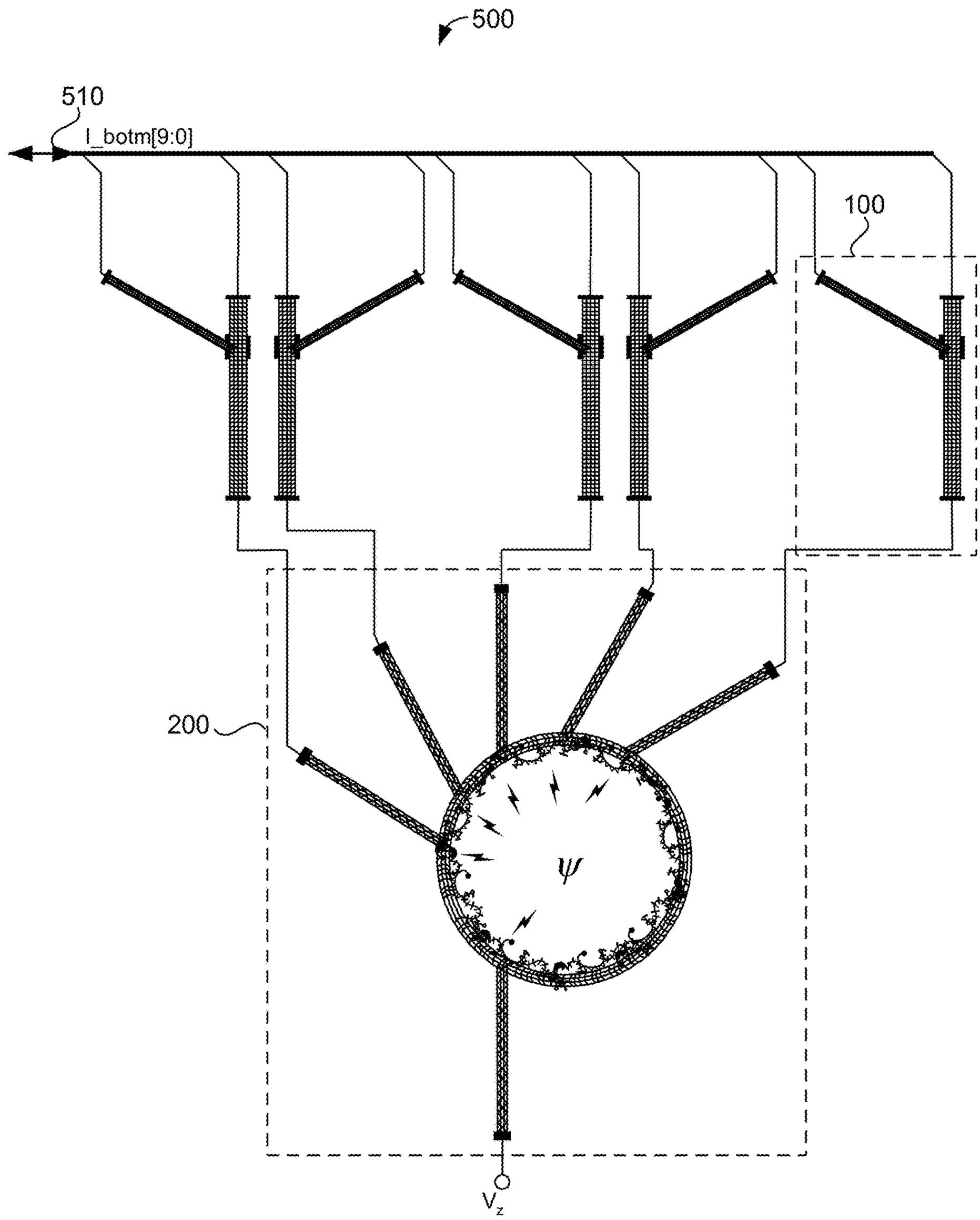

FIG. 5

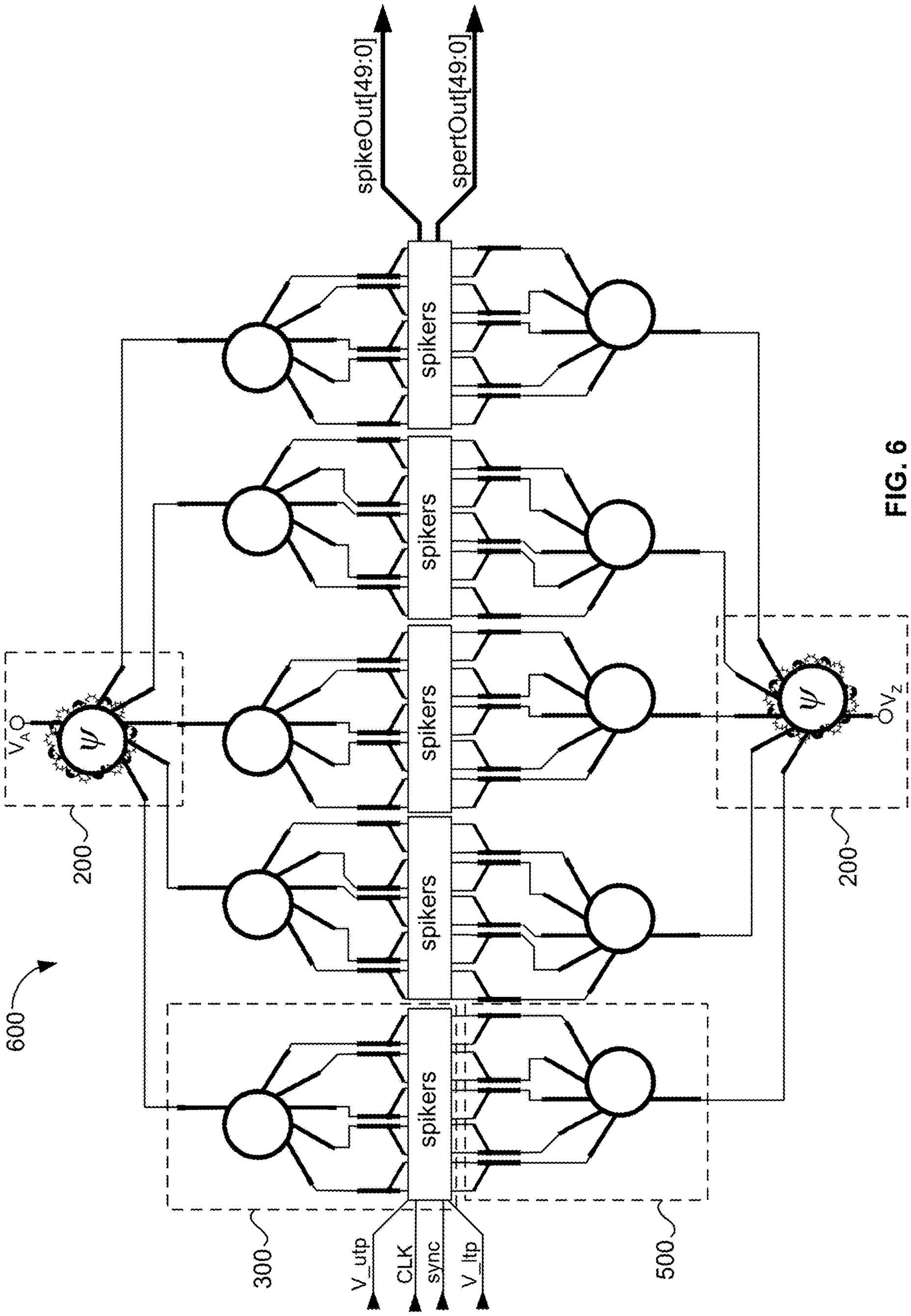
spikeOut[49:0]
spertOut[49:0]
spikers
spikers
spikers
spikers
spikers
spikers
V_A
V_Z
200
200
600
300
500
V_utp
CLK
sync
V_ltp

FIG. 6

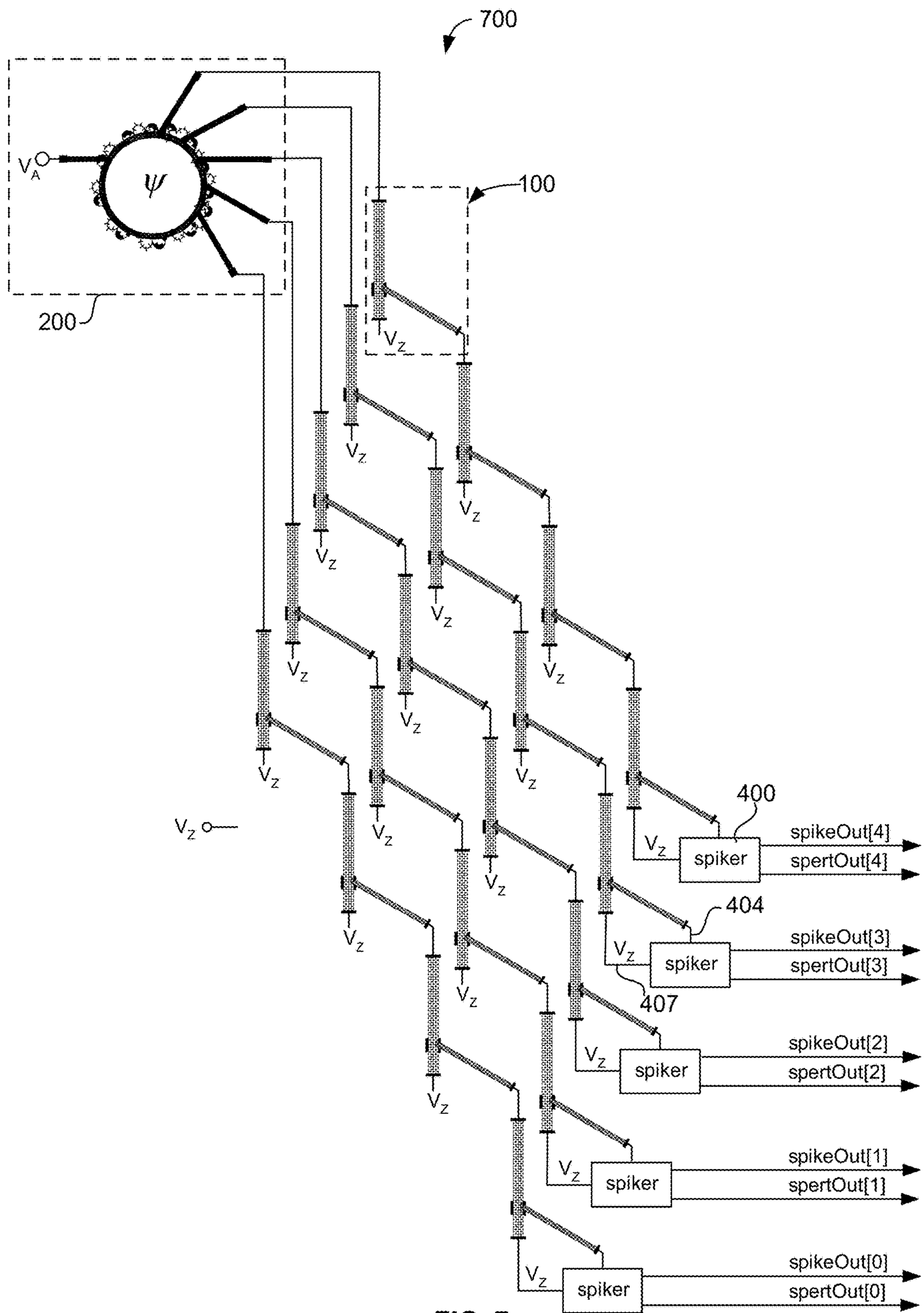
700
100
200
V_A
ψ
V_z
400
404
407
spiker
spikeOut[4]
spertOut[4]
spikeOut[3]
spertOut[3]
spikeOut[2]
spertOut[2]
spikeOut[1]
spertOut[1]
spikeOut[0]
spertOut[0]

FIG. 7

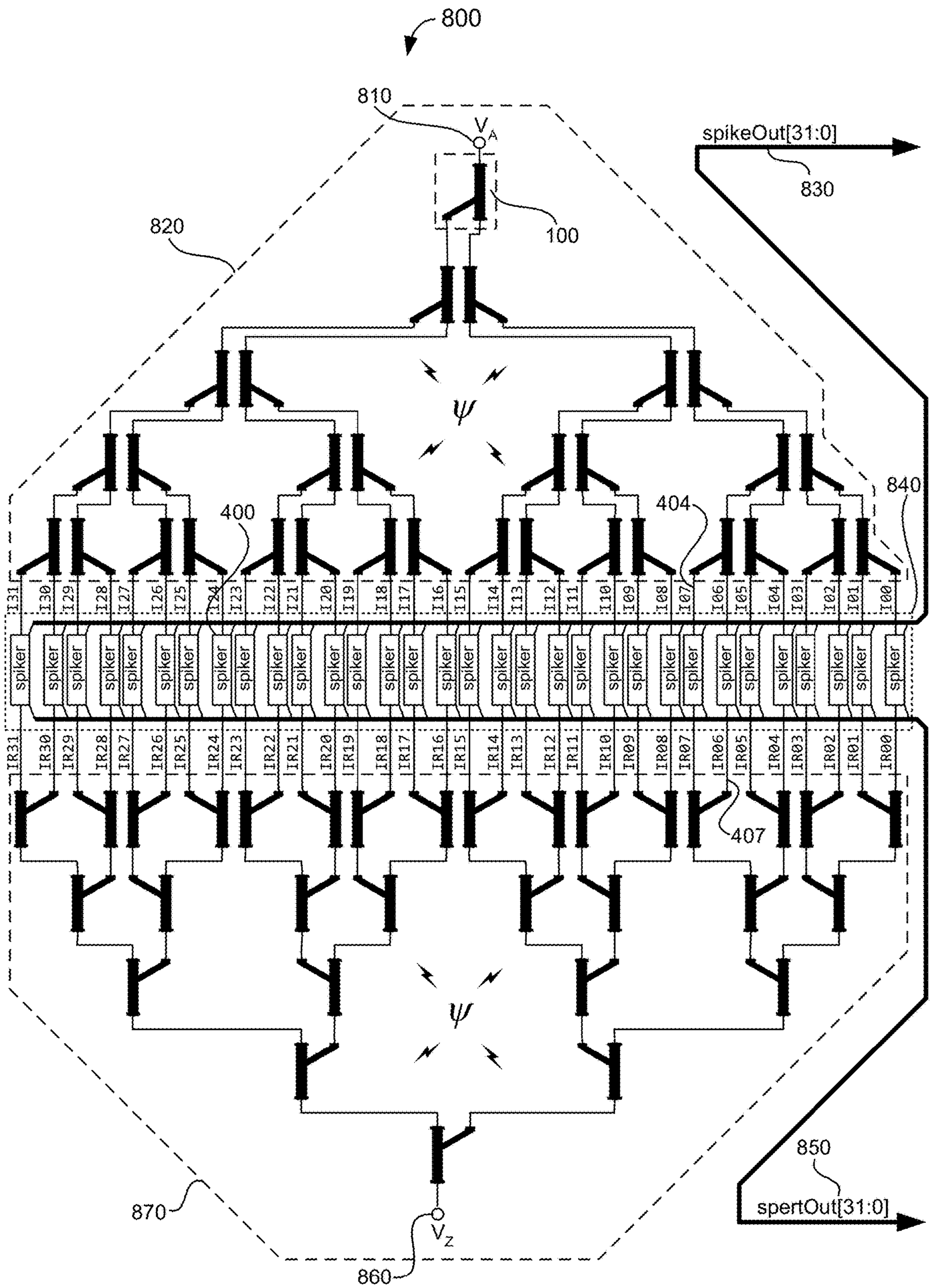
800
810
V_A
spikeOut[31:0]
830
820
100
840
400
404
I31 I30 I29 I28 I27 I26 I25 I24 I23 I22 I21 I20 I19 I18 I17 I16 I15 I14 I13 I12 I11 I10 I09 I08 I07 I06 I05 I04 I03 I02 I01 I00
spiker
IR31 IR30 IR29 IR28 IR27 IR26 IR25 IR24 IR23 IR22 IR21 IR20 IR19 IR18 IR17 IR16 IR15 IR14 IR13 IR12 IR11 IR10 IR09 IR08 IR07 IR06 IR05 IR04 IR03 IR02 IR01 IR00
407
850
spertOut[31:0]
870
V_Z
860

FIG. 8

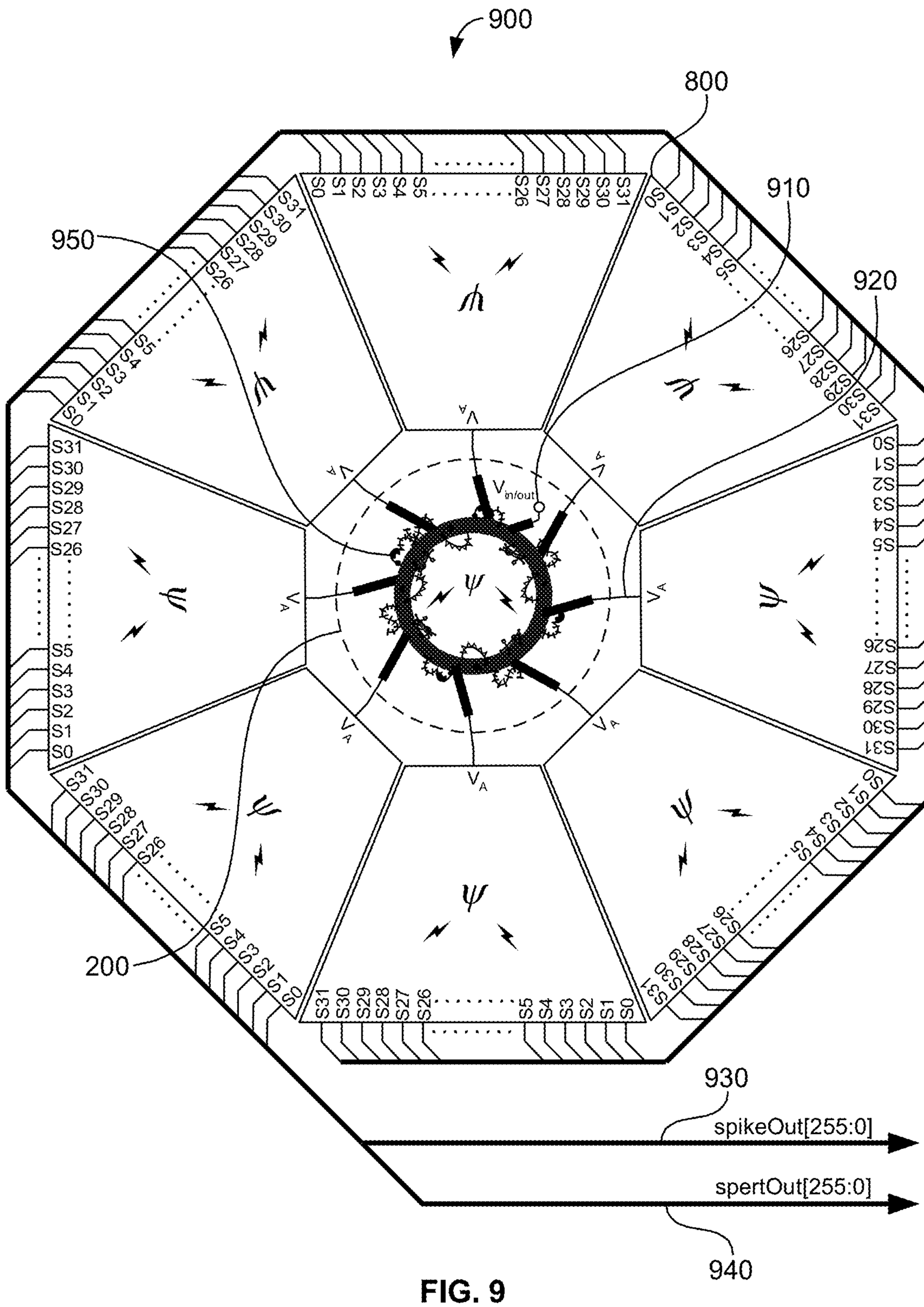
900
800
910
920
950
200
930
940
spikeOut[255:0]
spertOut[255:0]
$V_{in/out}$
V_A
S0
S1
S2
S3
S4
S5
S26
S27
S28
S29
S30
S31

FIG. 9

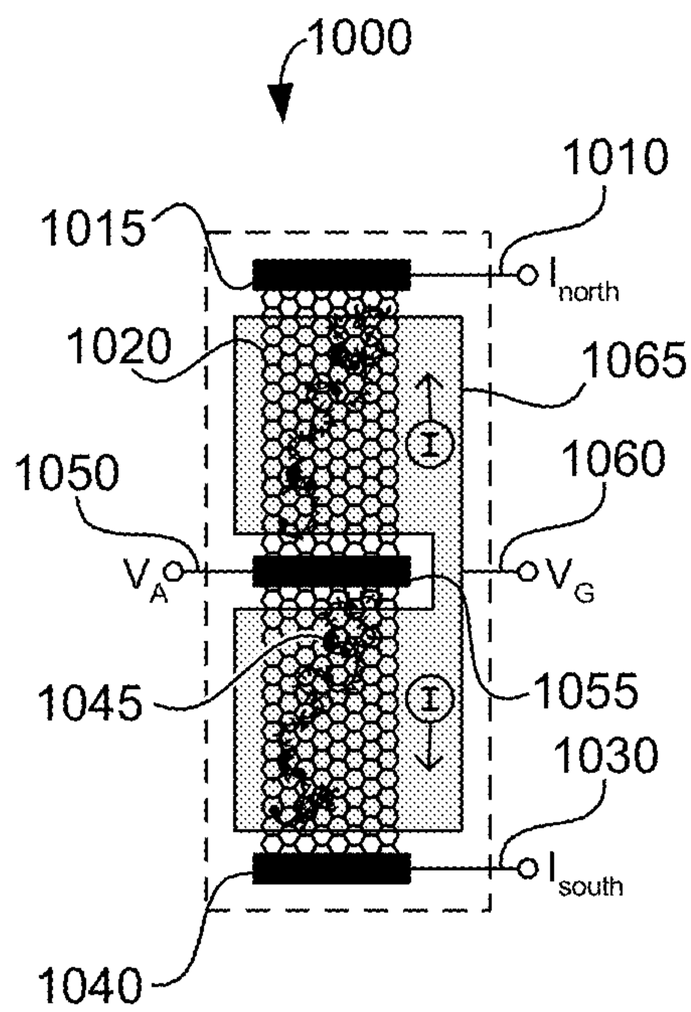
1000
1010
1015
I_{north}
1020
1065
I
1050
1060
V_A
V_G
1045
1055
I
1030
I_{south}
1040

FIG. 10

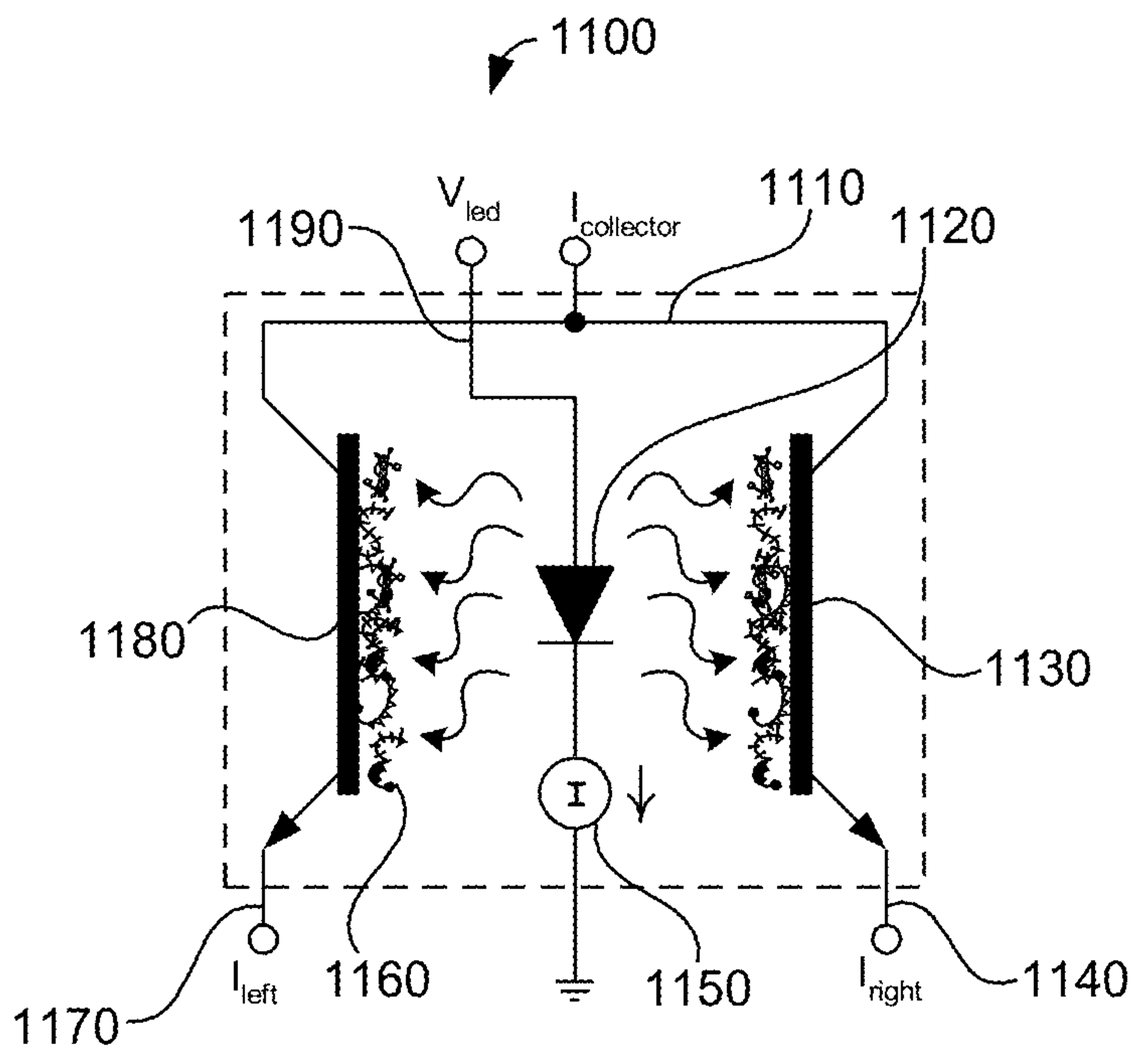
1100
V led
I collector
1190
1110
1120
1180
1130
I
I left
1160
1150
I right
1140
1170

FIG. 11

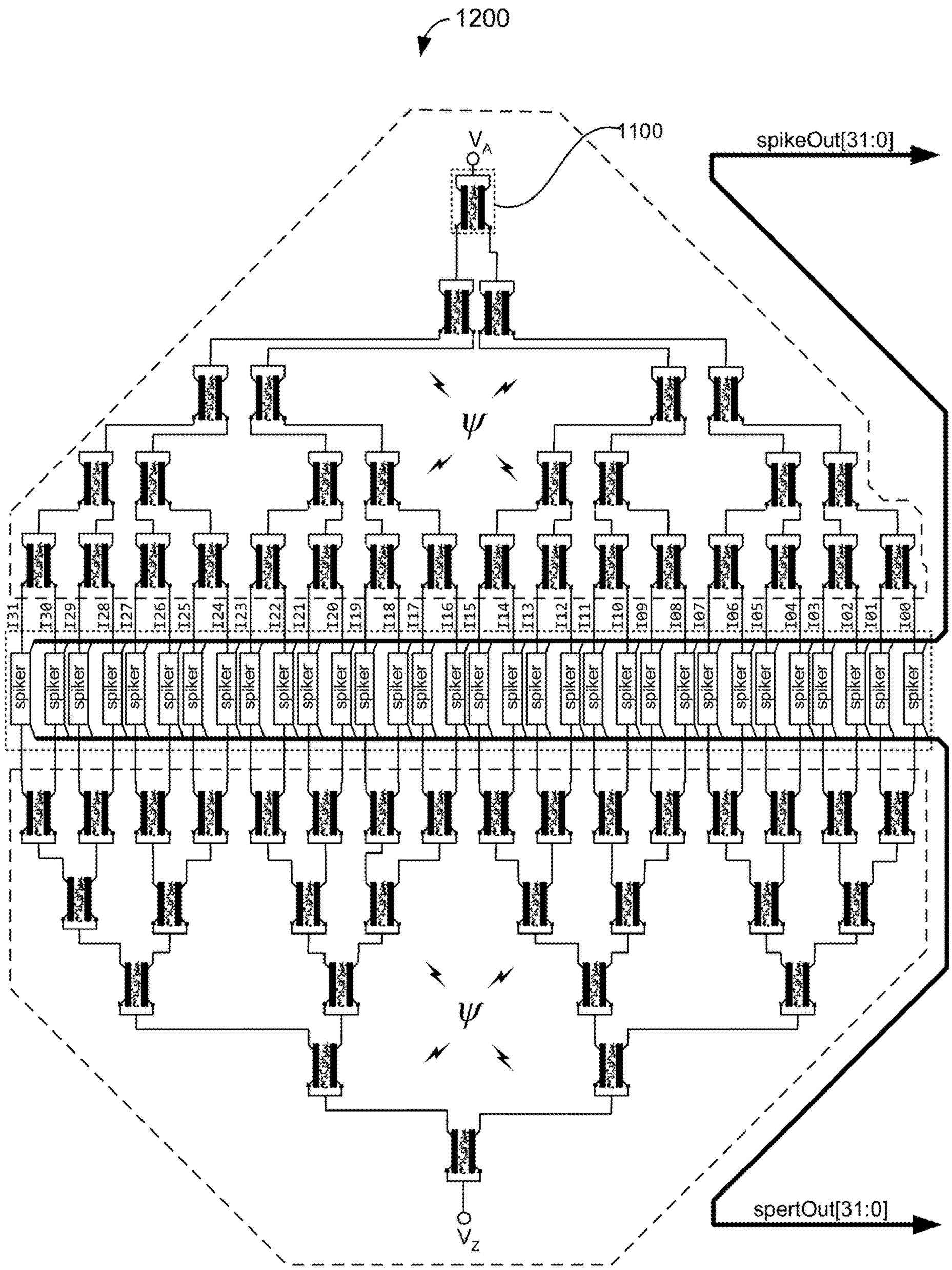
1200
1100
V_A
spikeOut[31:0]
spertOut[31:0]
V_Z
I31
I30
I29
I28
I27
I26
I25
I24
I23
I22
I21
I20
I19
I18
I17
I16
I15
I14
I13
I12
I11
I10
I09
I08
I07
I06
I05
I04
I03
I02
I01
I00
spiker

FIG. 12

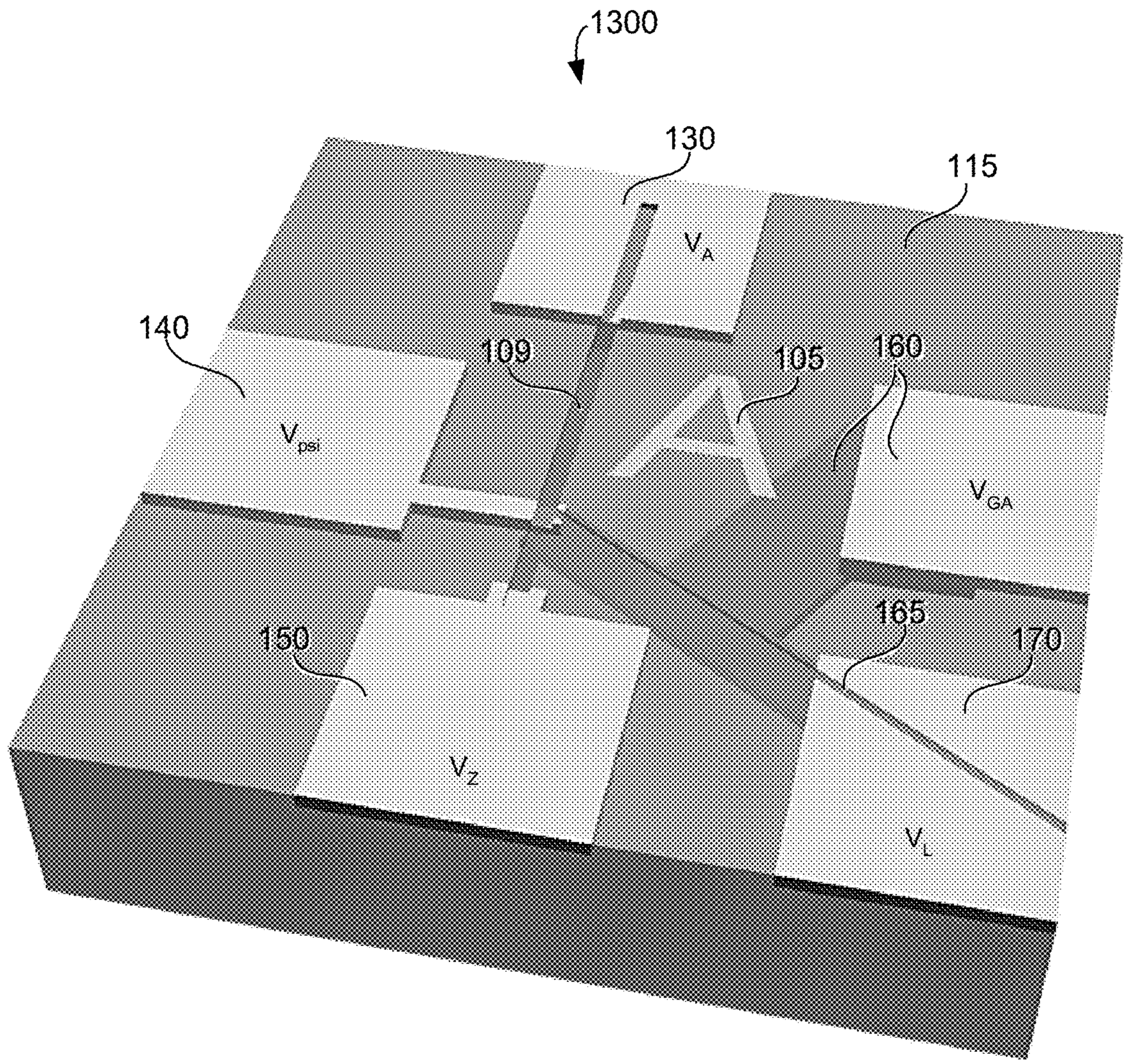

FIG. 13a

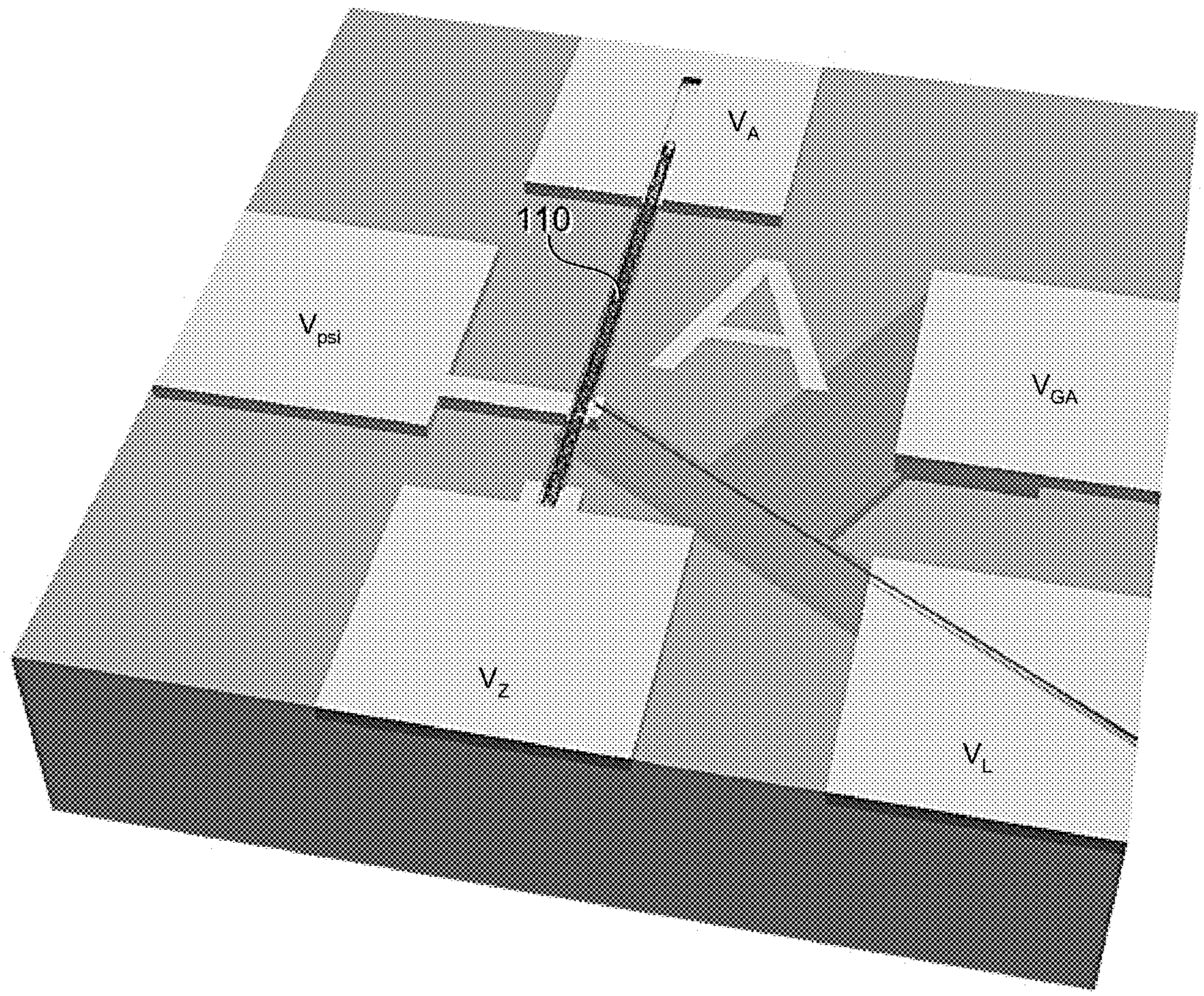

FIG. 13b

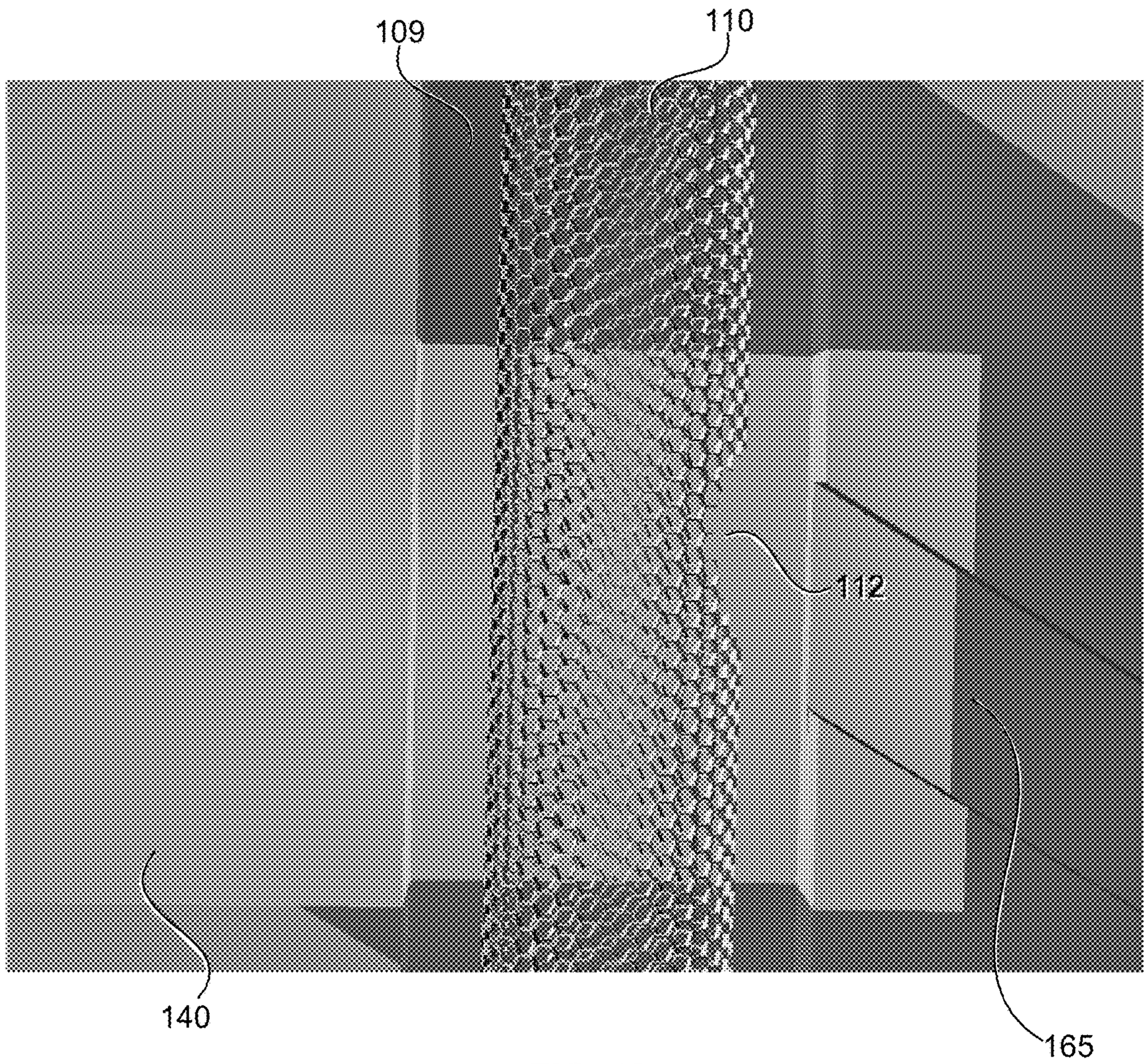

FIG. 13c

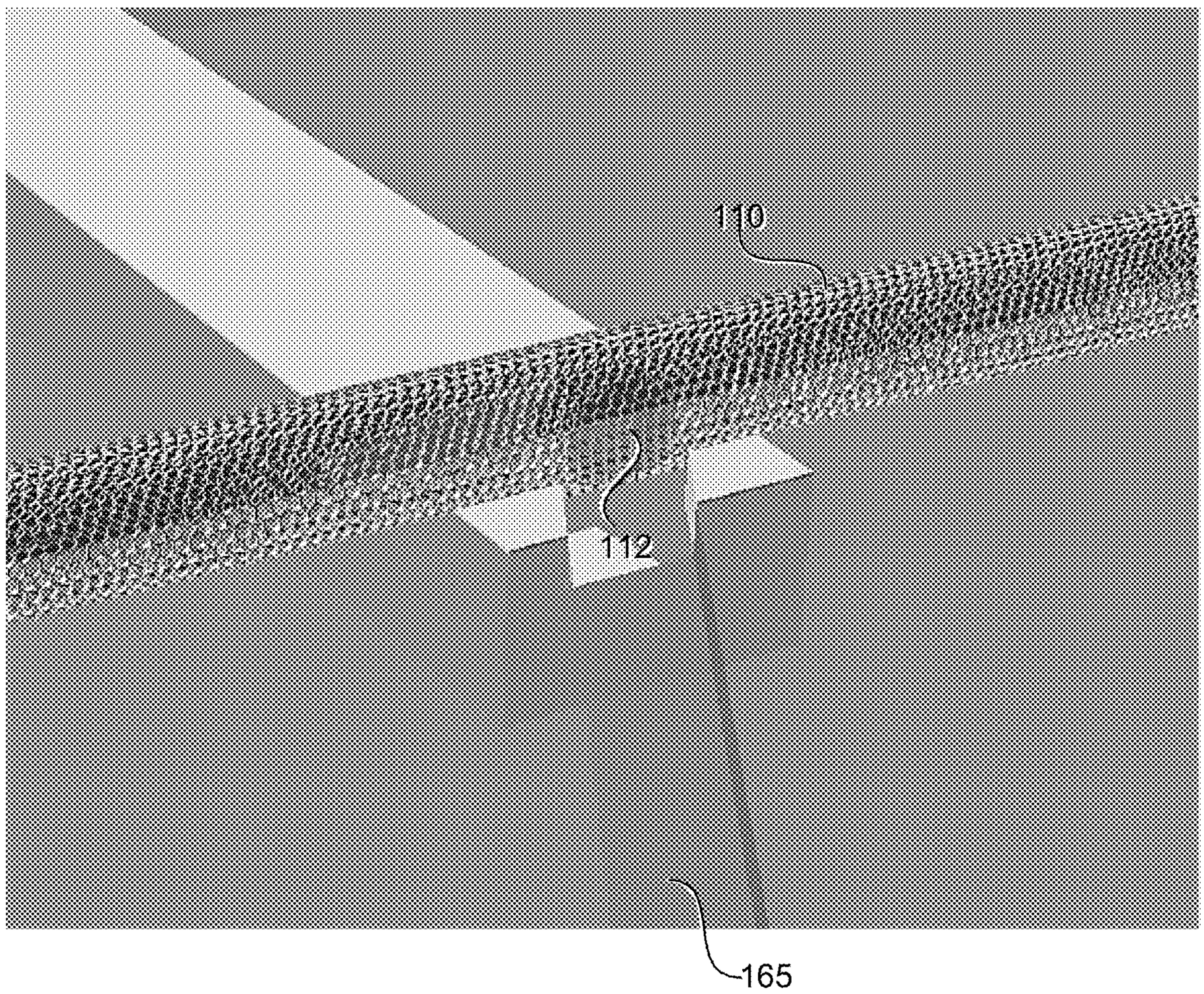

FIG. 13d

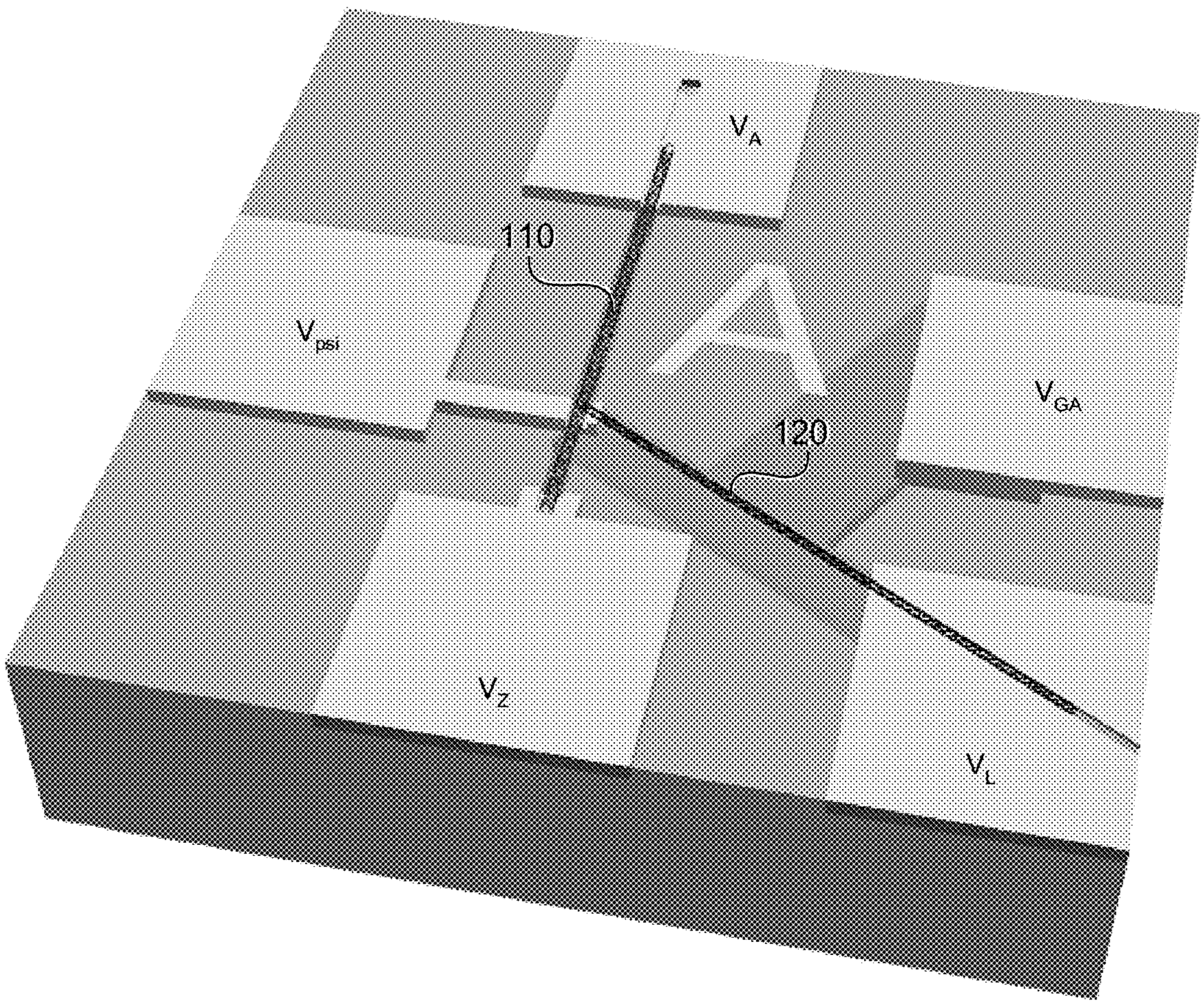

FIG. 13e

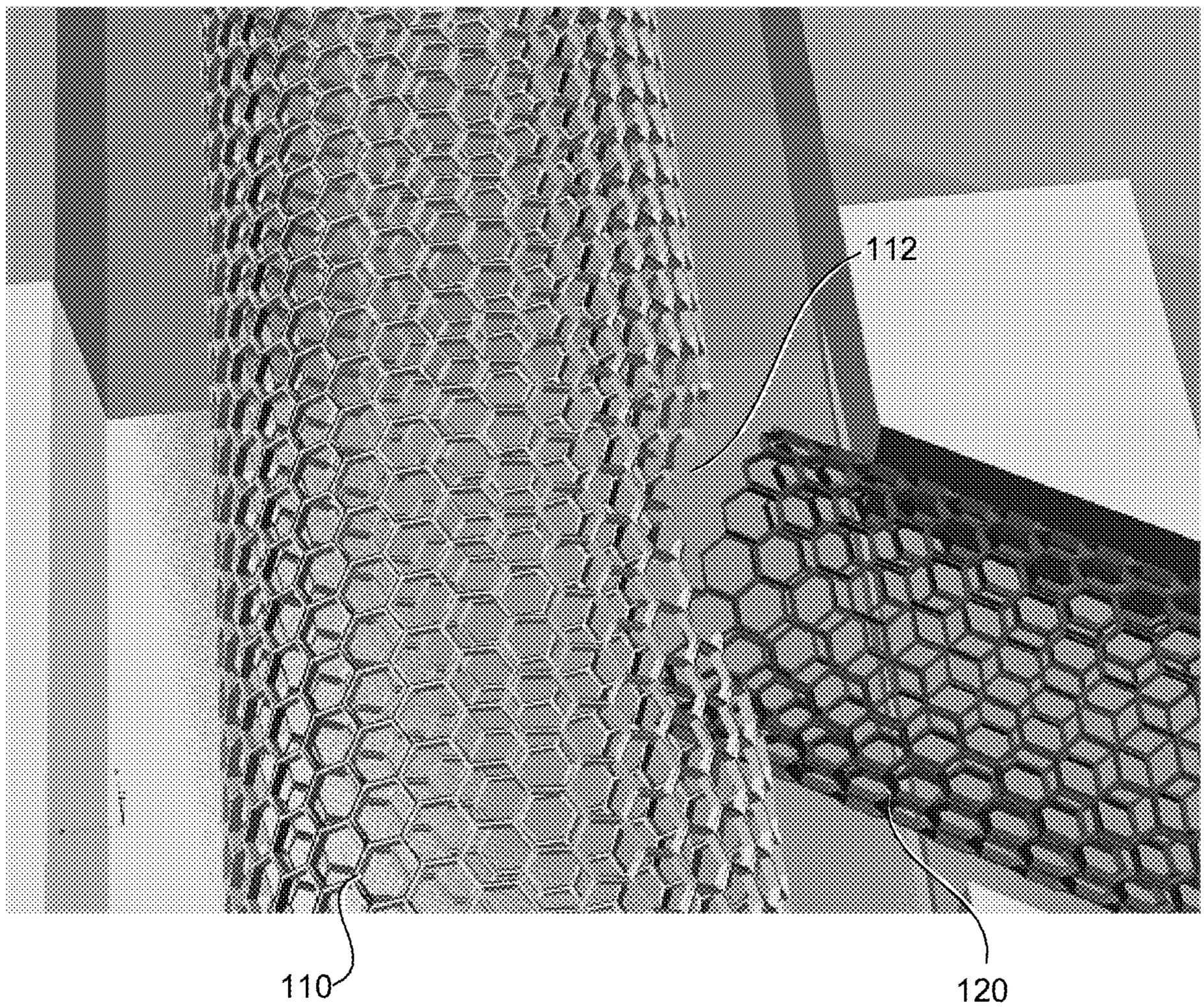

FIG. 13f

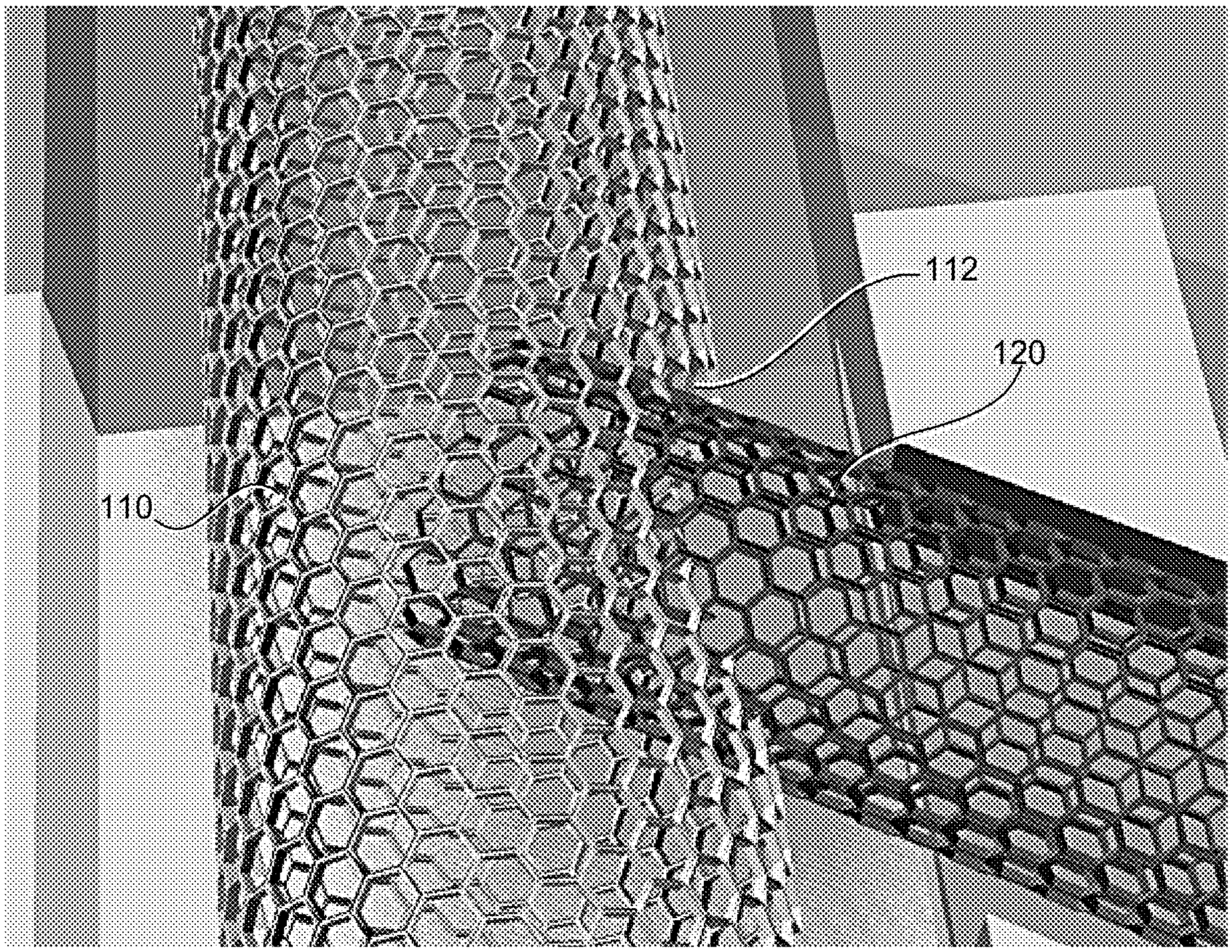

FIG. 13g

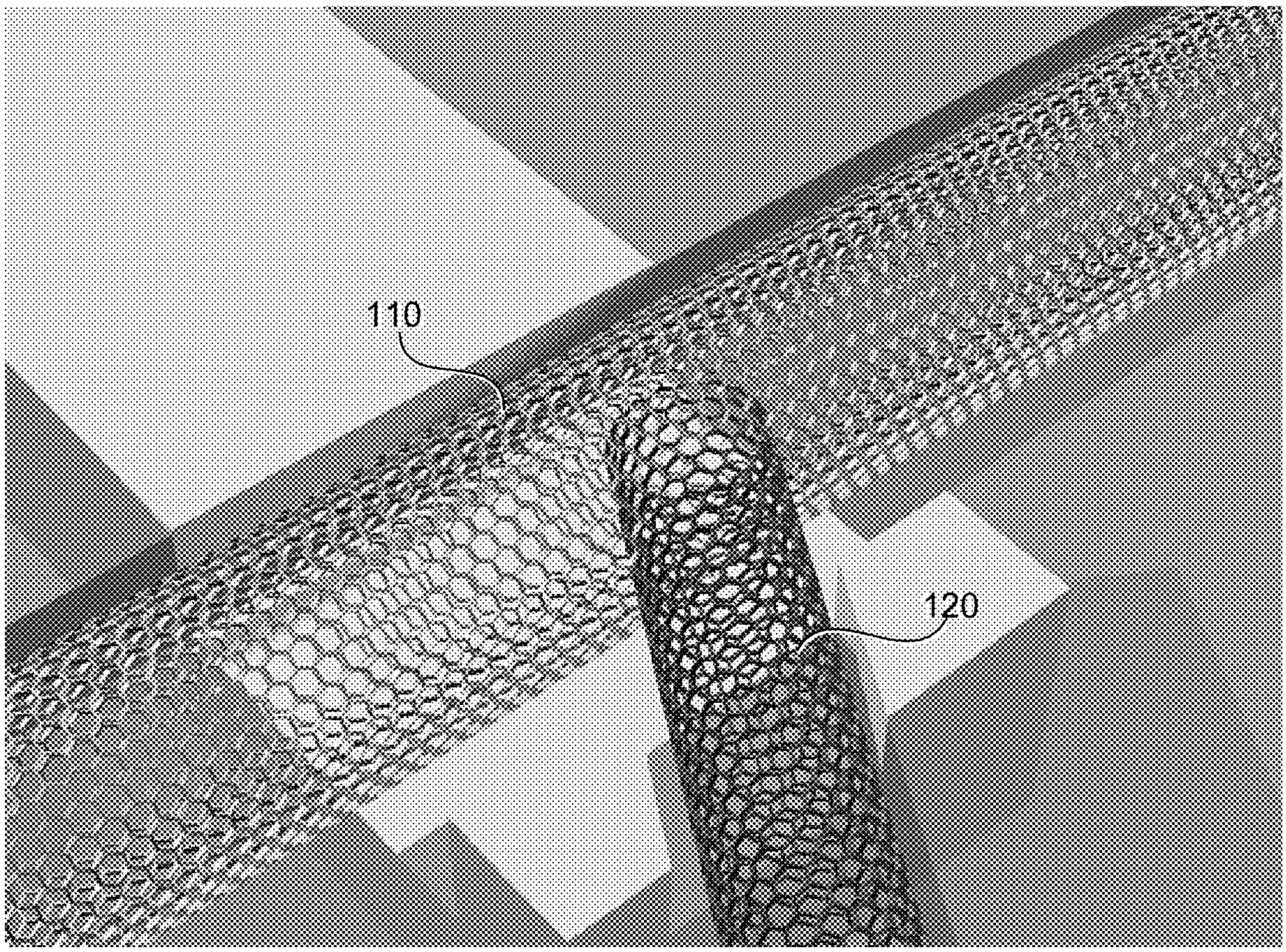

FIG. 13h

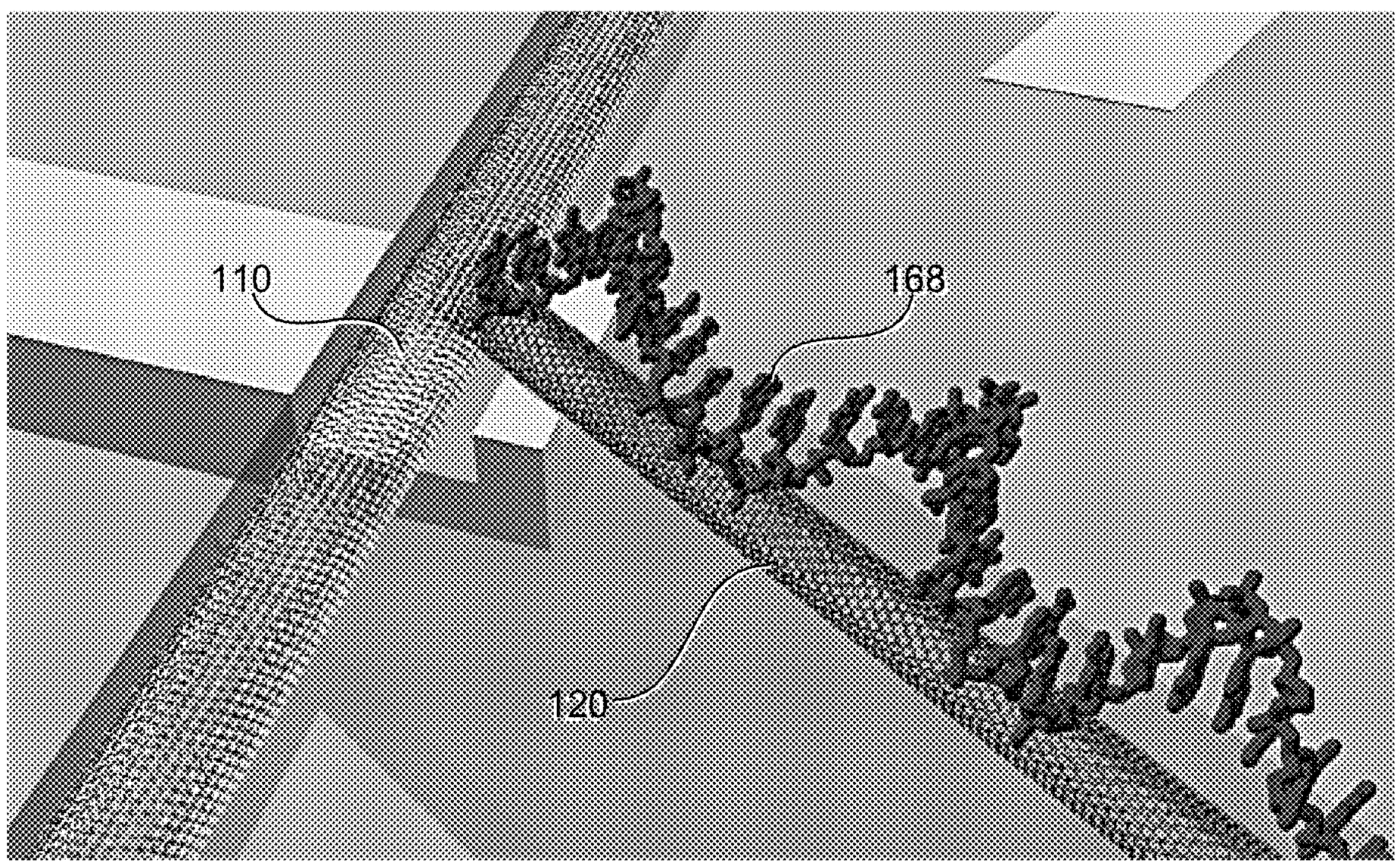

FIG. 13i

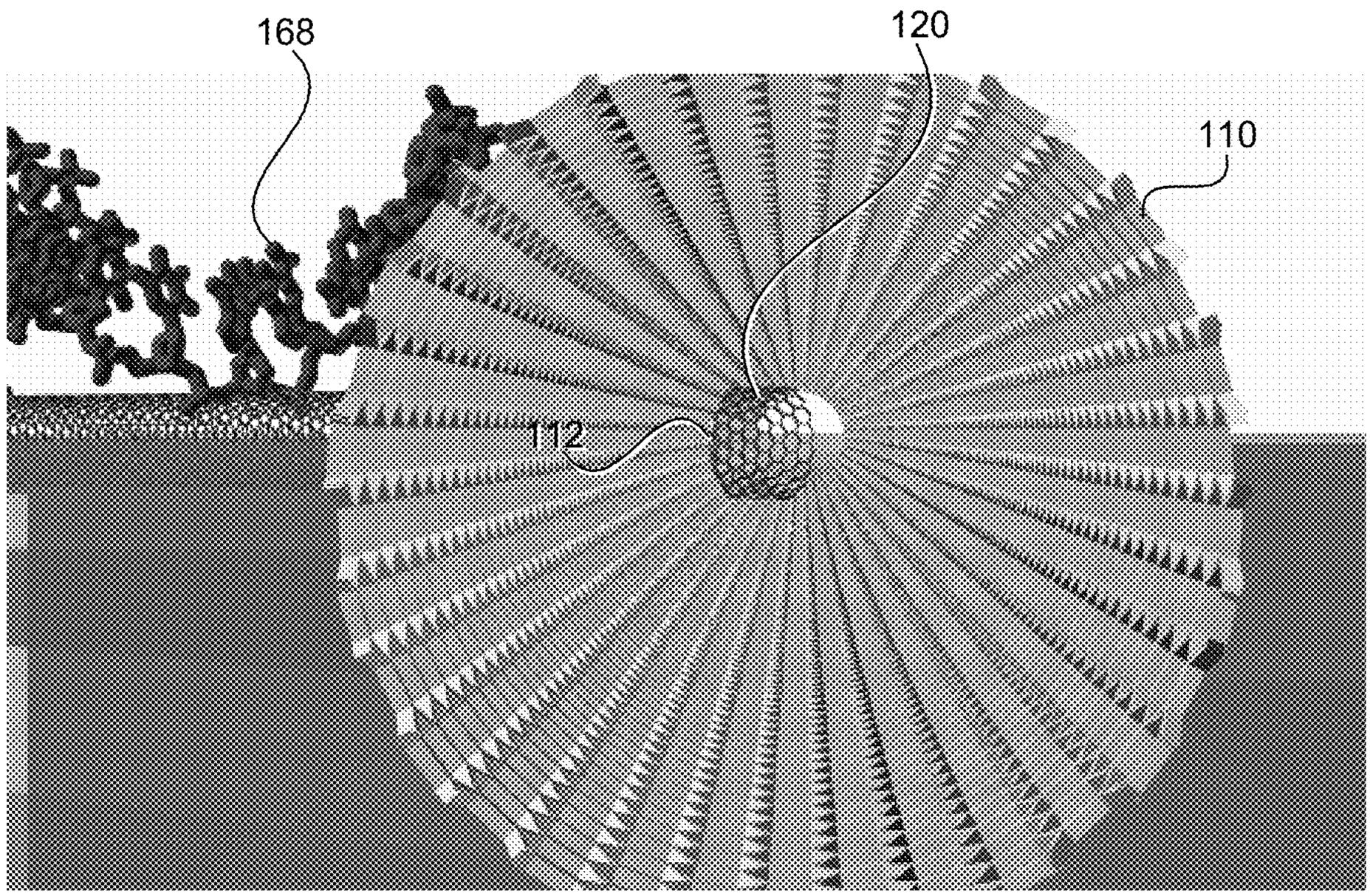

FIG. 13j

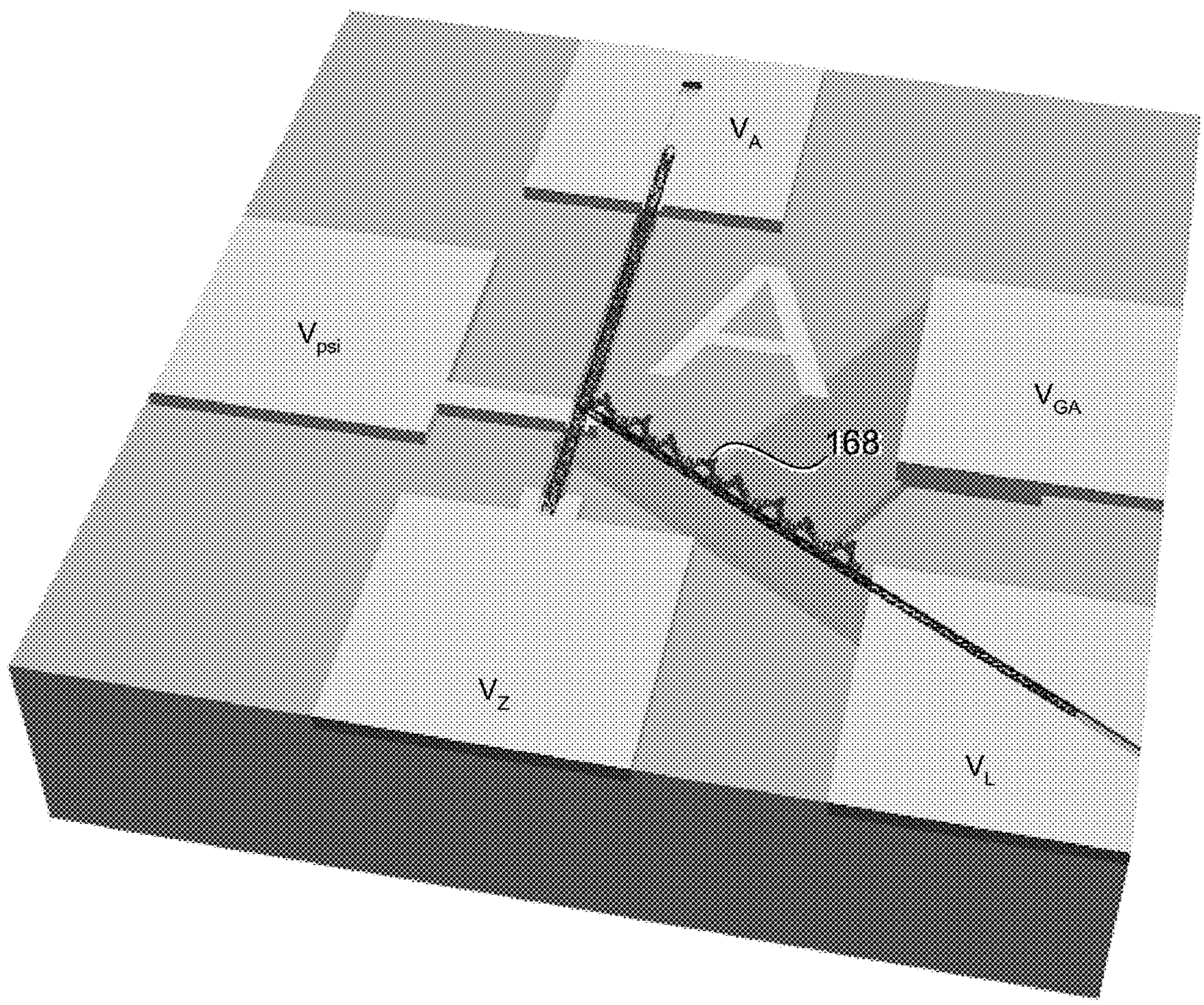

FIG. 13k

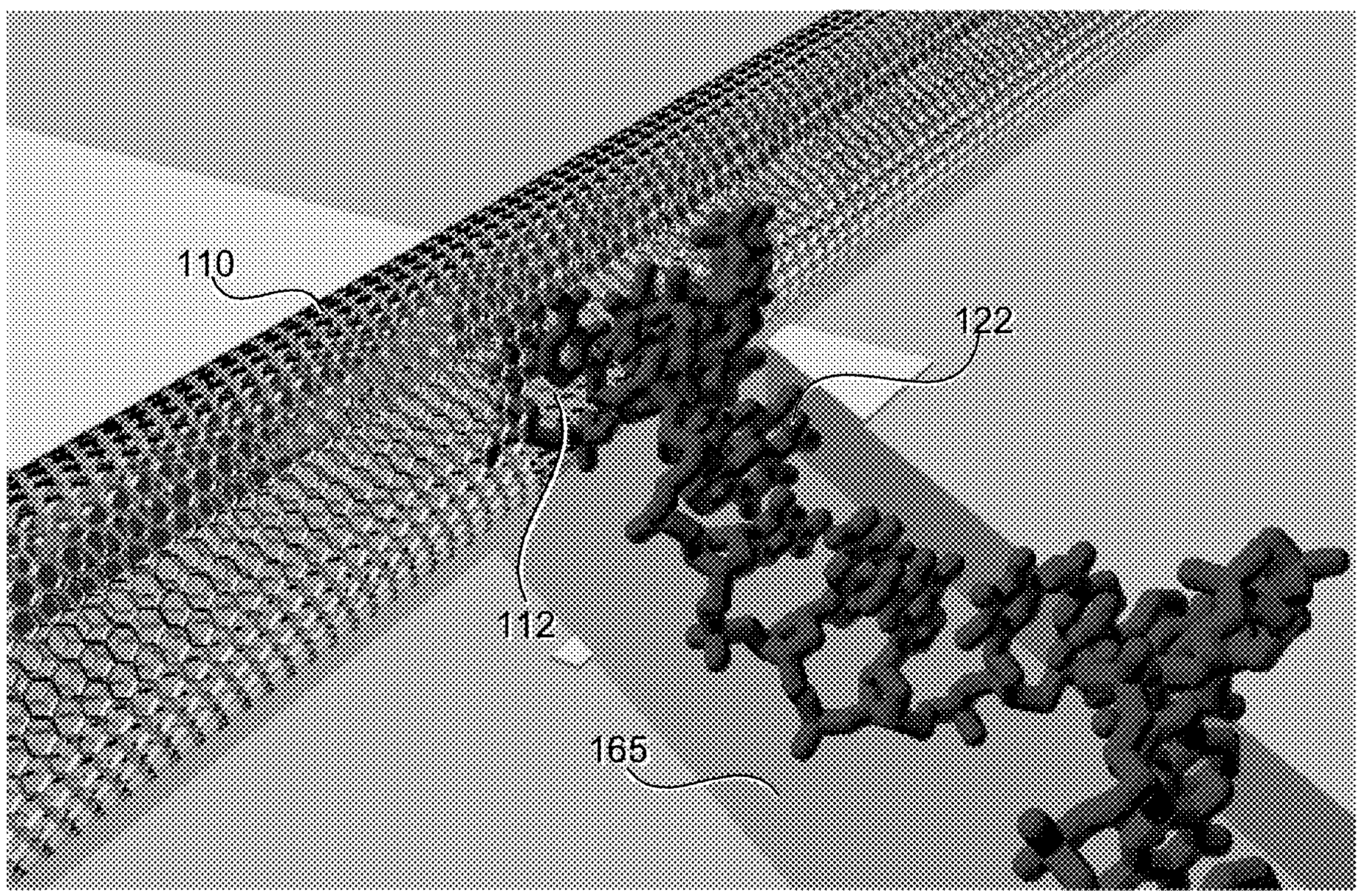

FIG. 13I

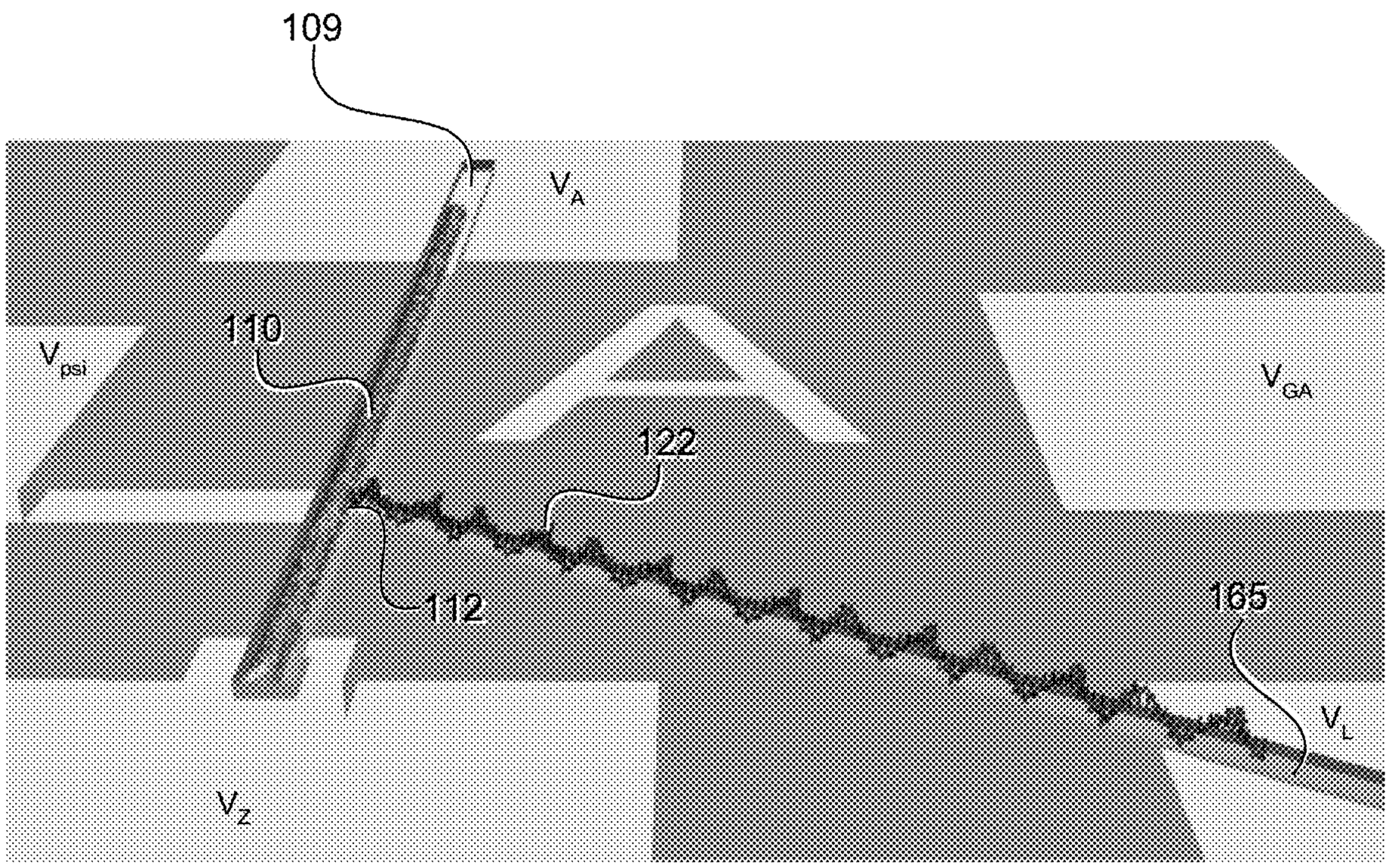

FIG. 13m

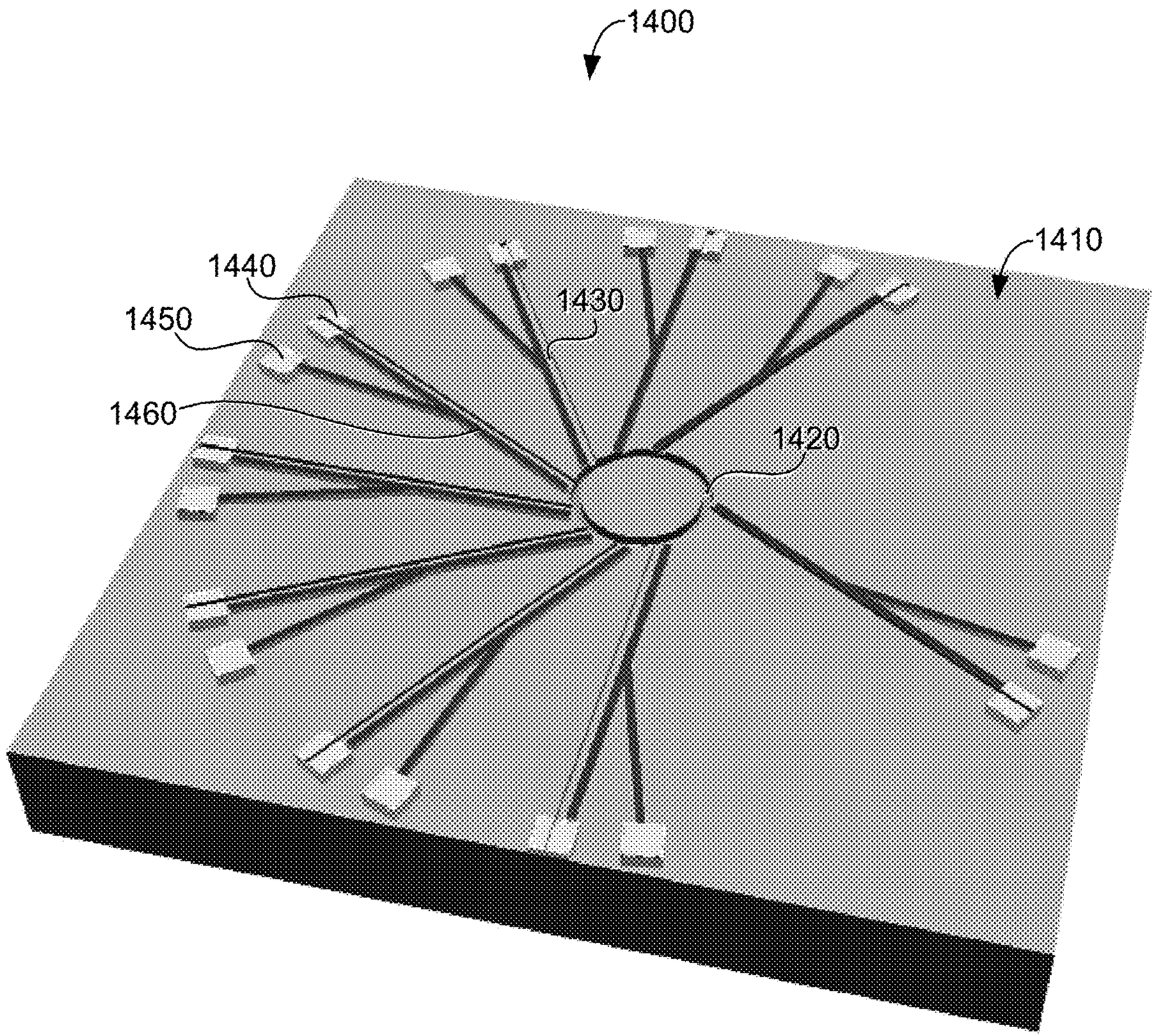

FIG. 14a

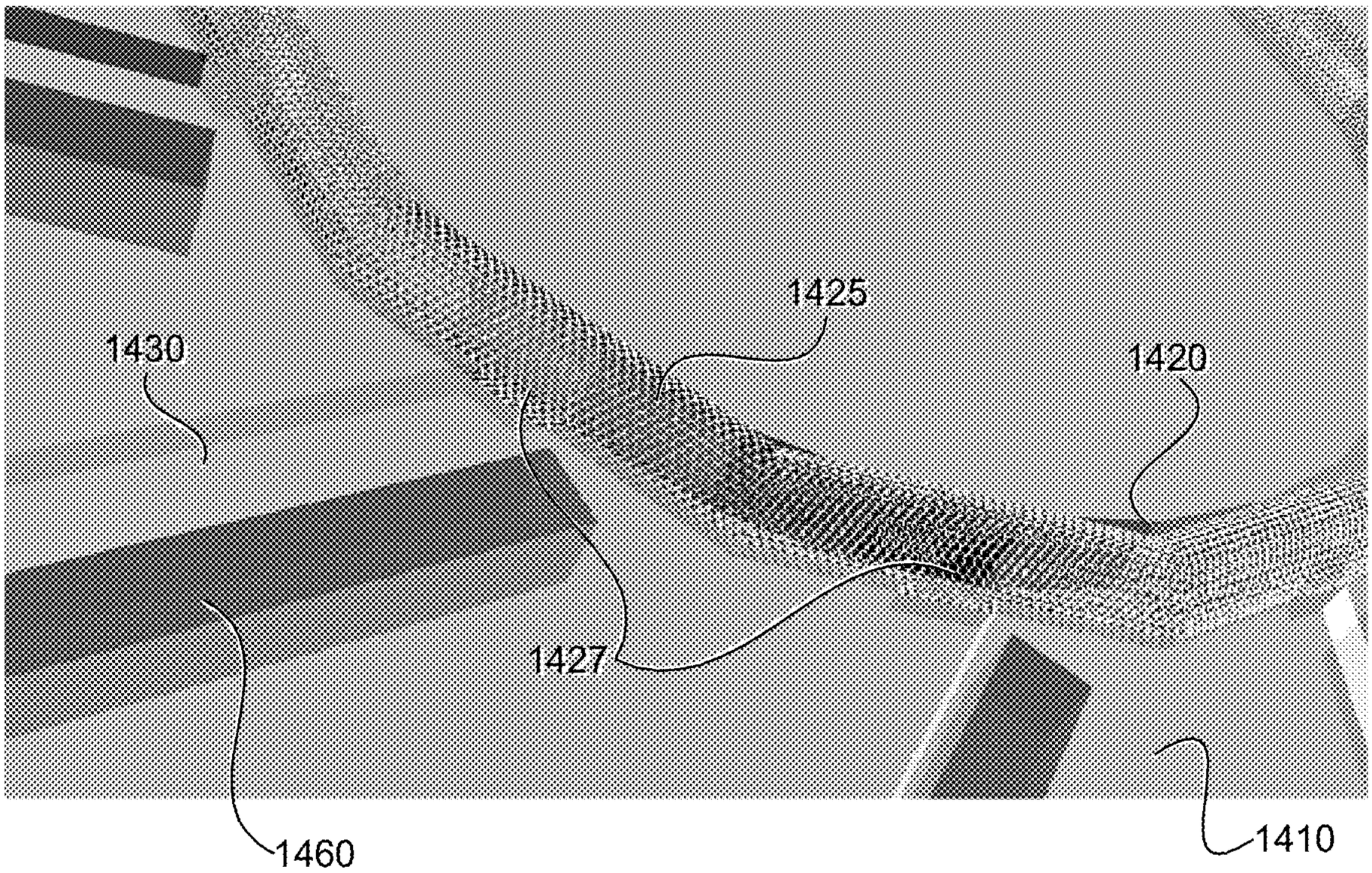

FIG. 14b

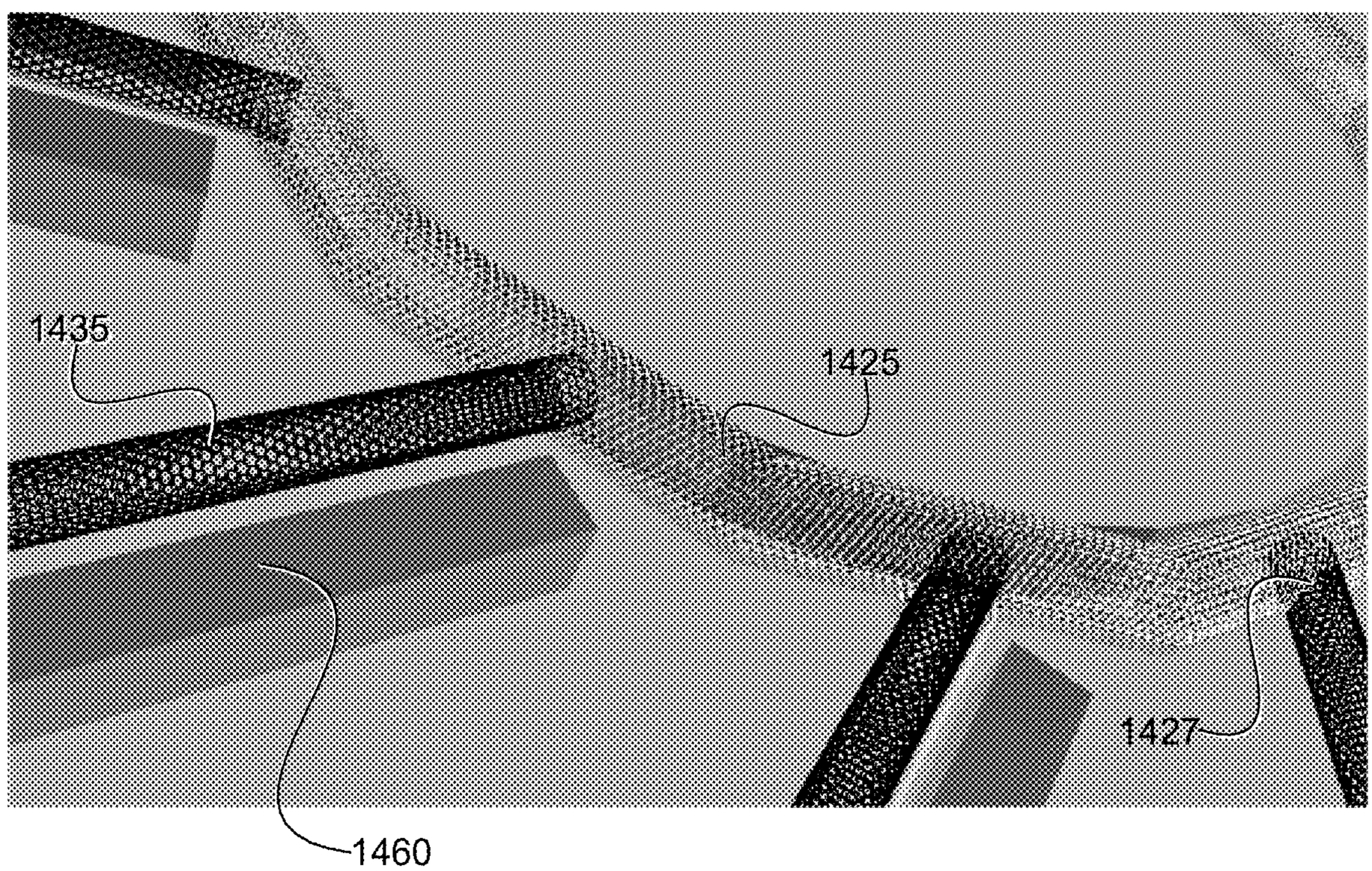

FIG. 14c

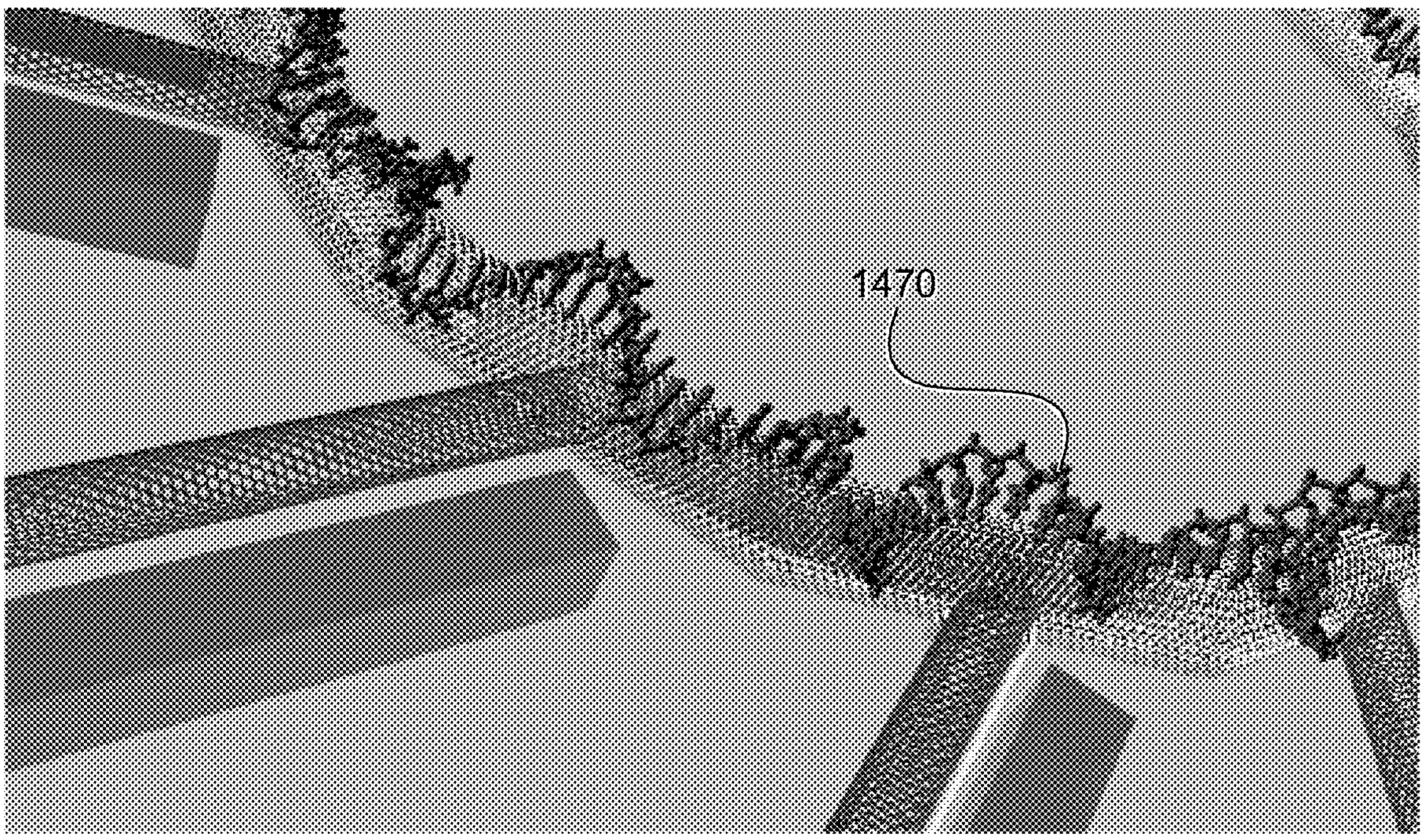

FIG. 14d

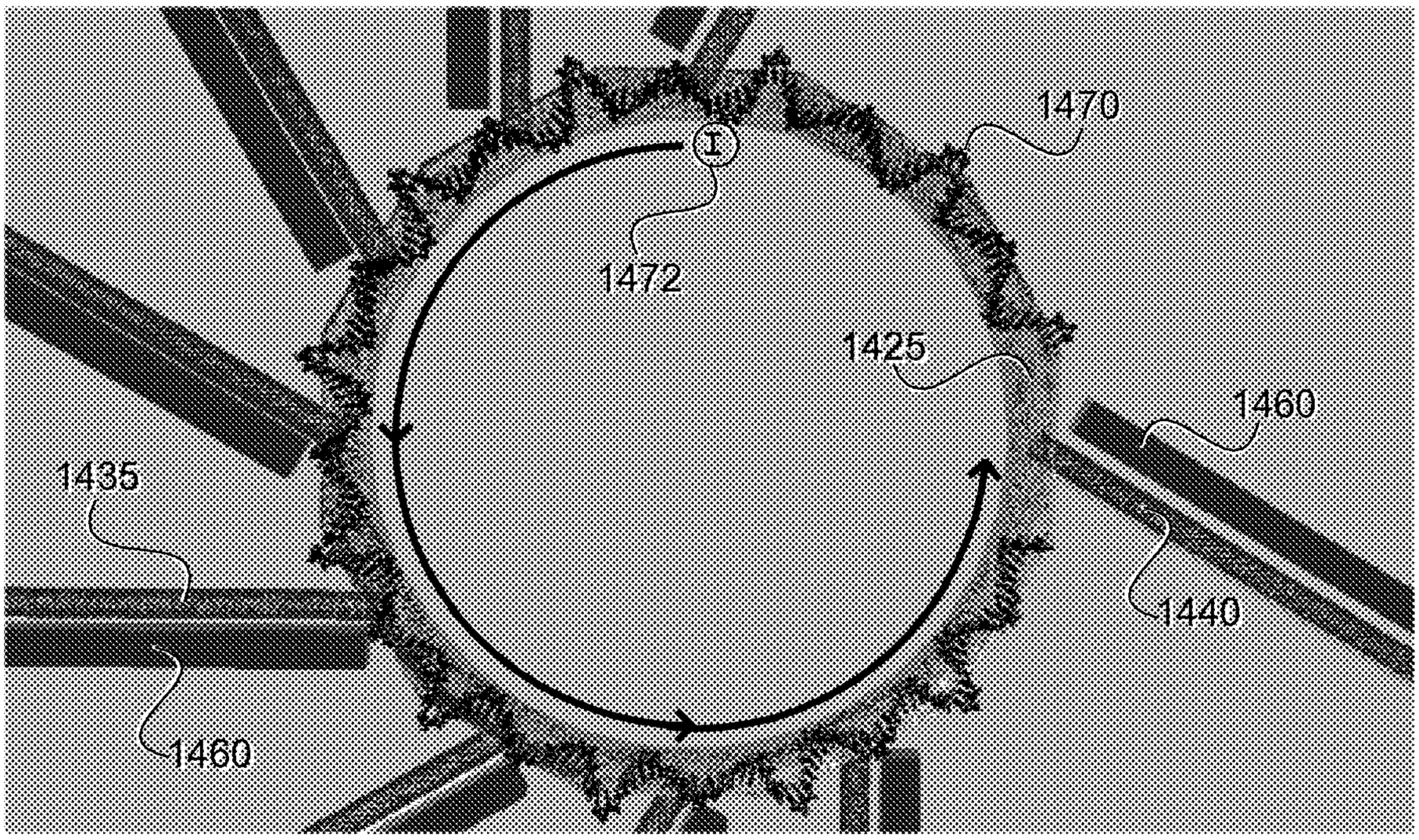

FIG. 14e

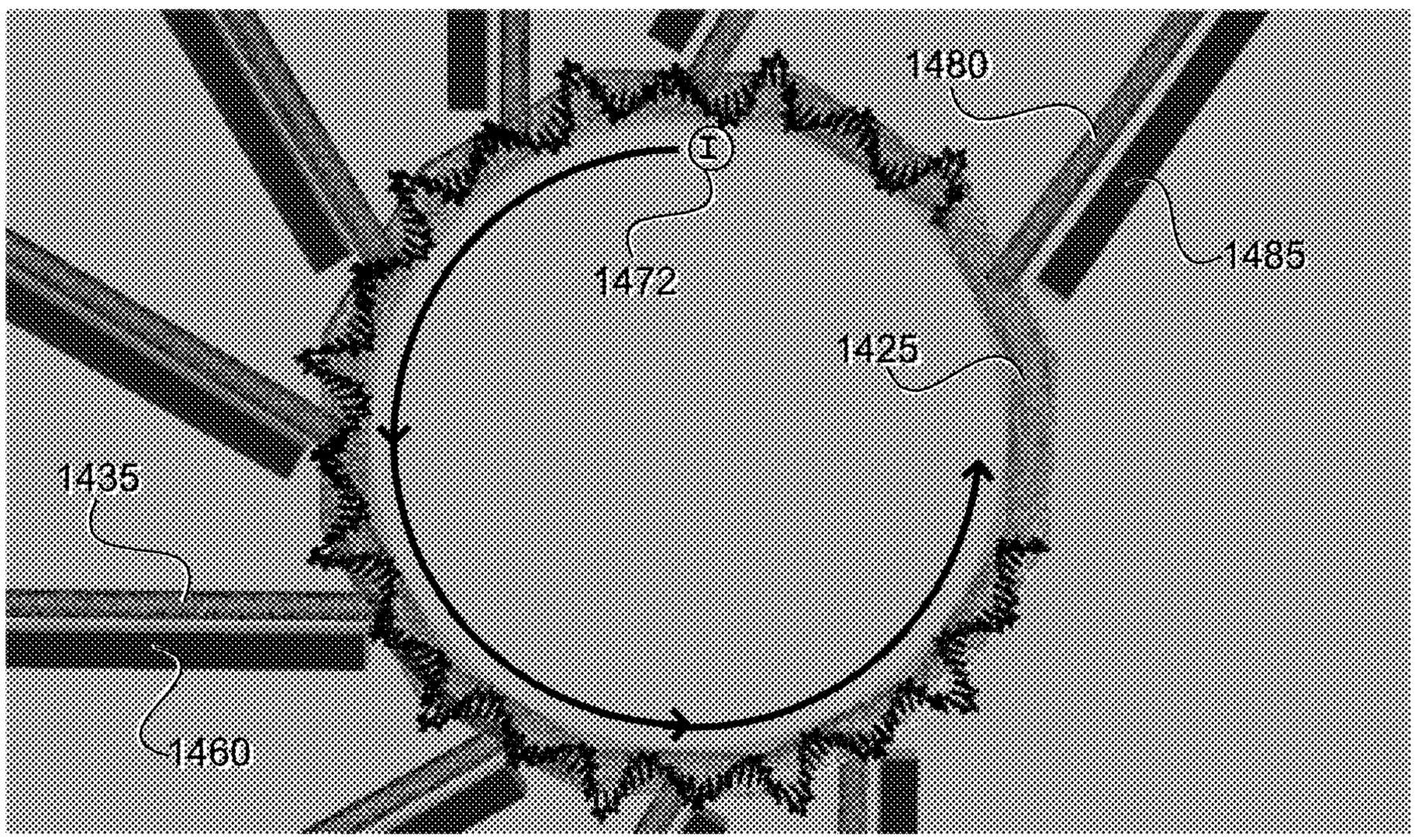

FIG. 14f

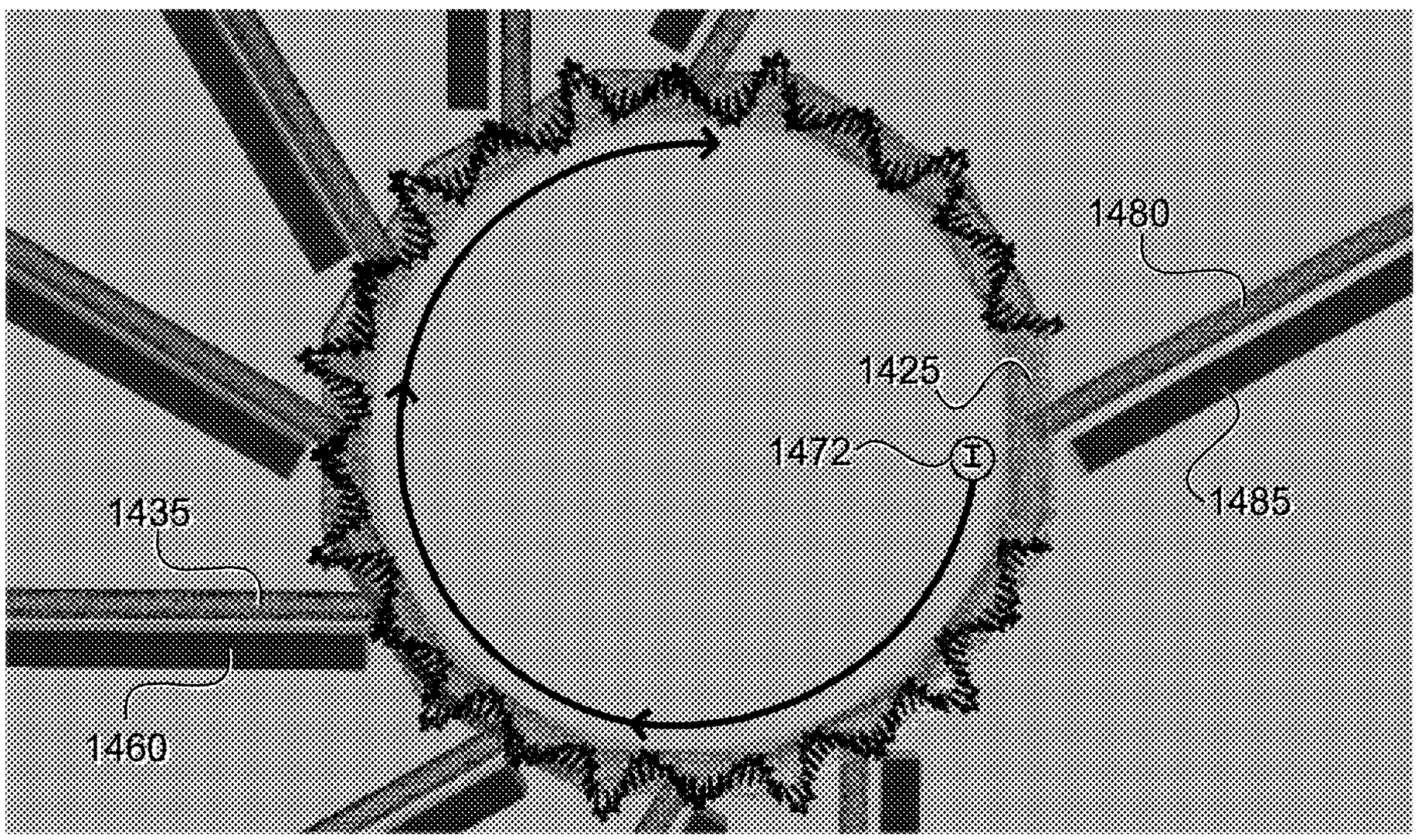

FIG. 14g

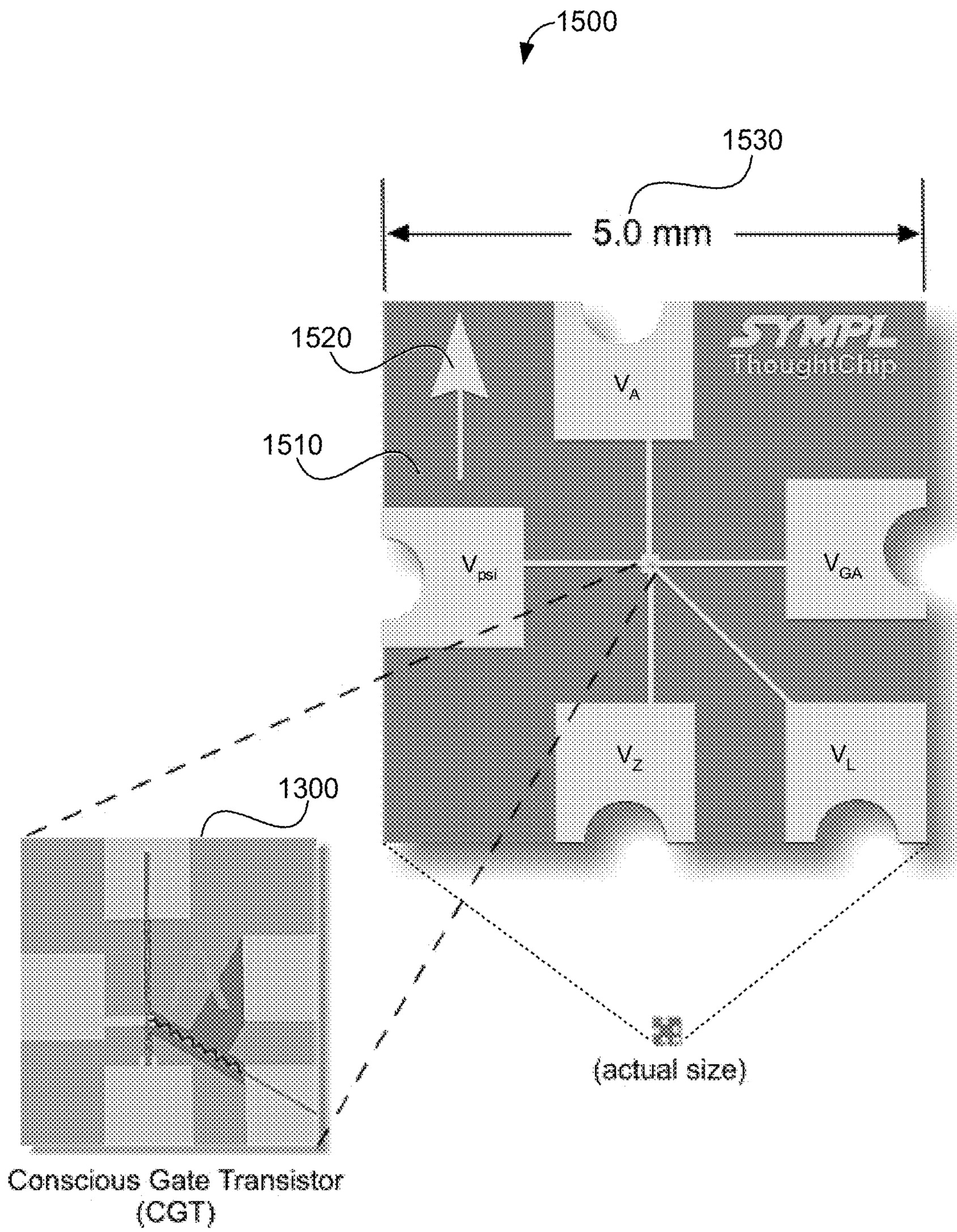
1500
1530
5.0 mm
1520
1510
V_A
V_{psi}
V_{GA}
V_Z
V_L
1300
(actual size)
Conscious Gate Transistor
(CGT)

FIG. 15

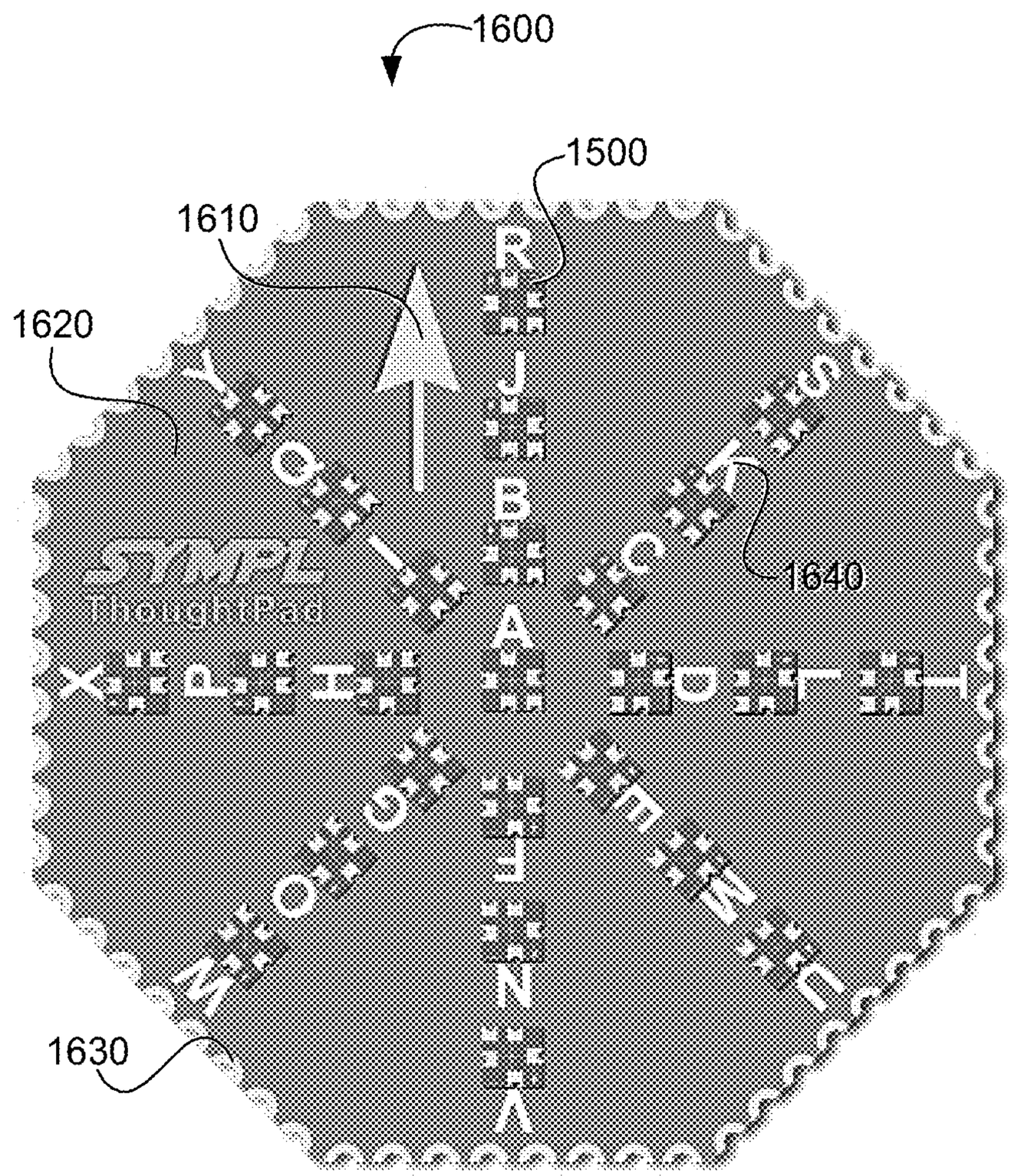

FIG. 16

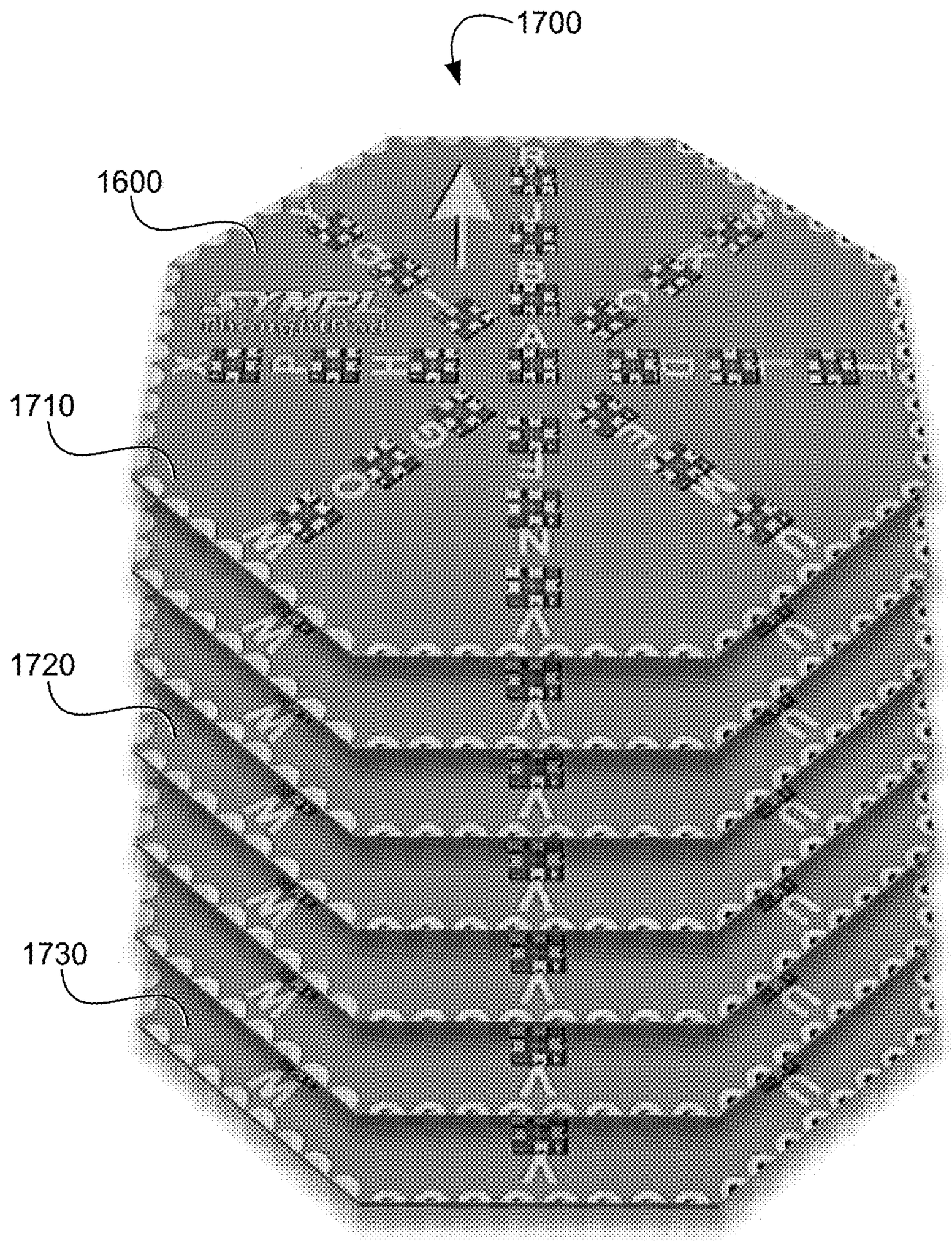

FIG. 17

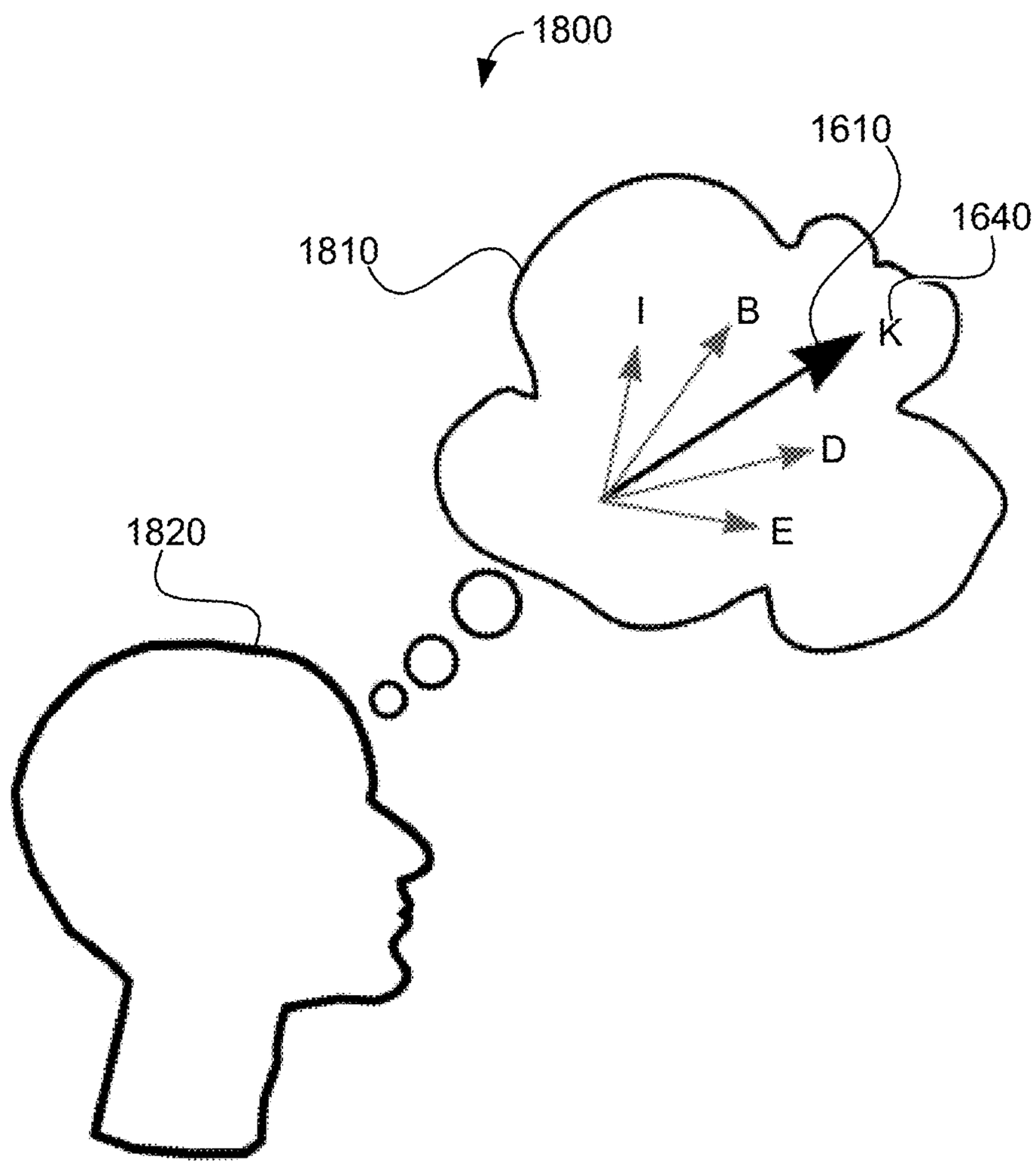

FIG. 18

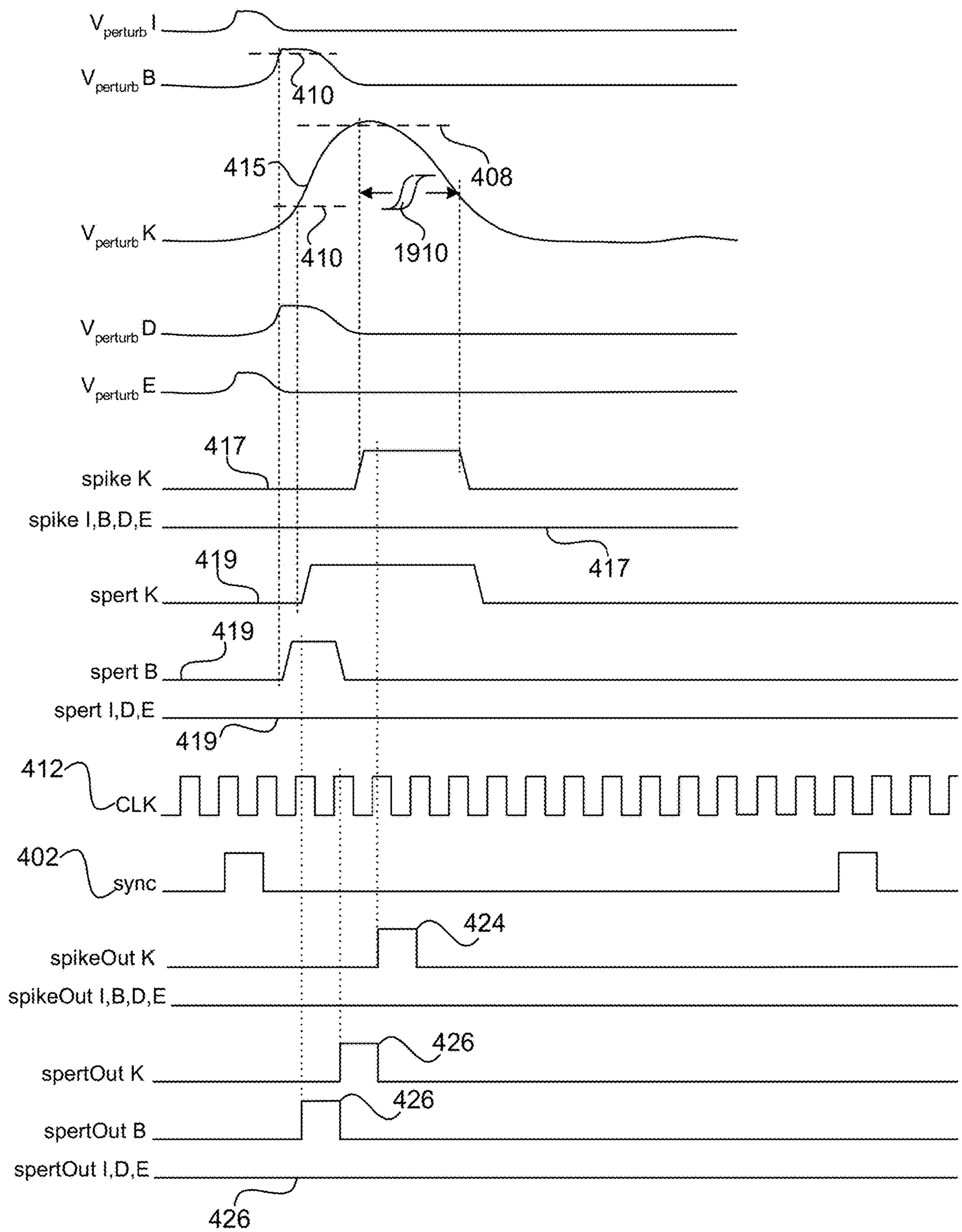
$V_{perturb}$ I
$V_{perturb}$ B
410
415
408
$V_{perturb}$ K
410
1910
$V_{perturb}$ D
$V_{perturb}$ E
417
spike K
spike I,B,D,E
417
419
spert K
419
spert B
spert I,D,E
419
412
CLK
402
sync
424
spikeOut K
spikeOut I,B,D,E
426
spertOut K
426
spertOut B
spertOut I,D,E
426

FIG. 19

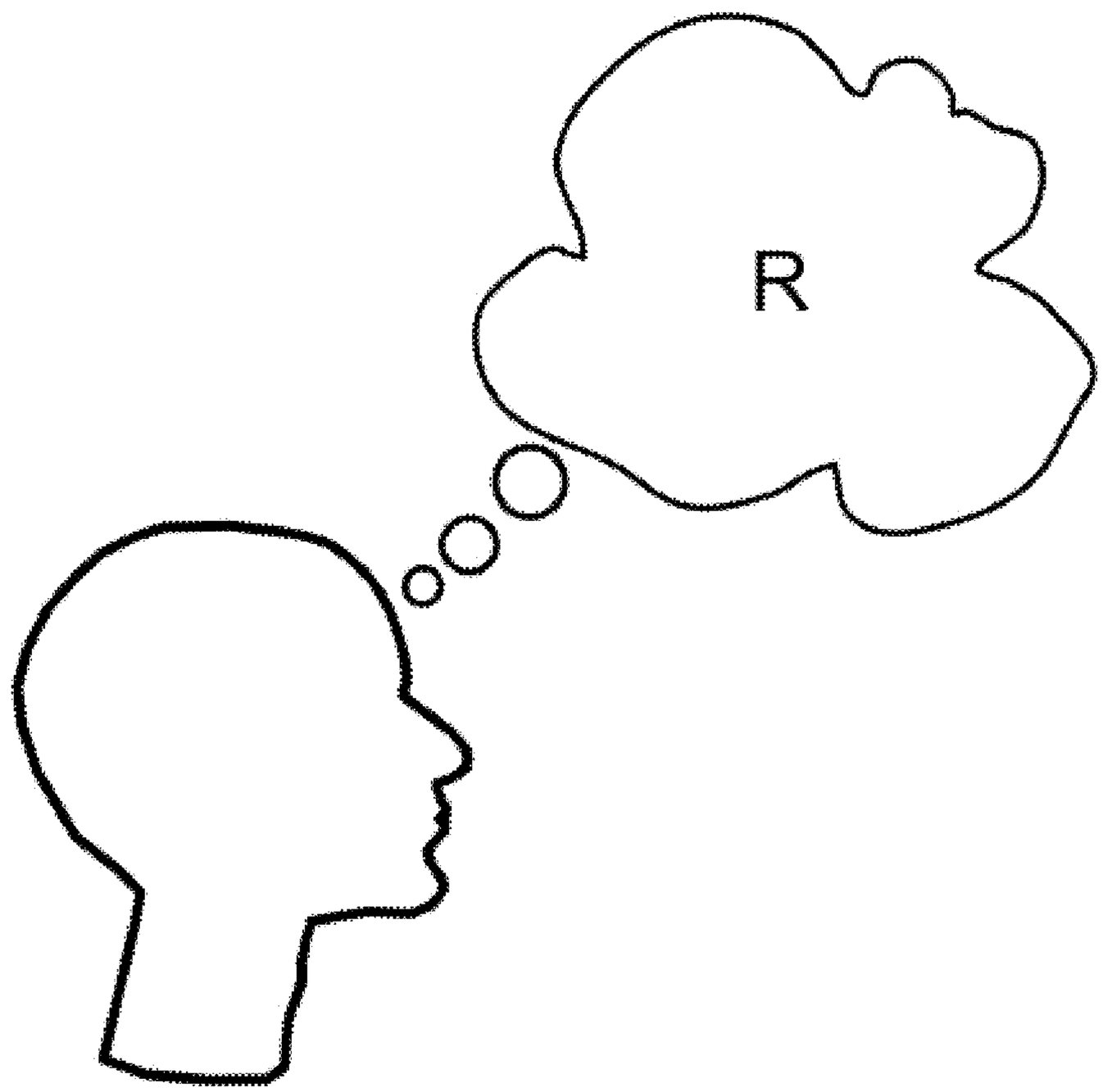

FIG. 20

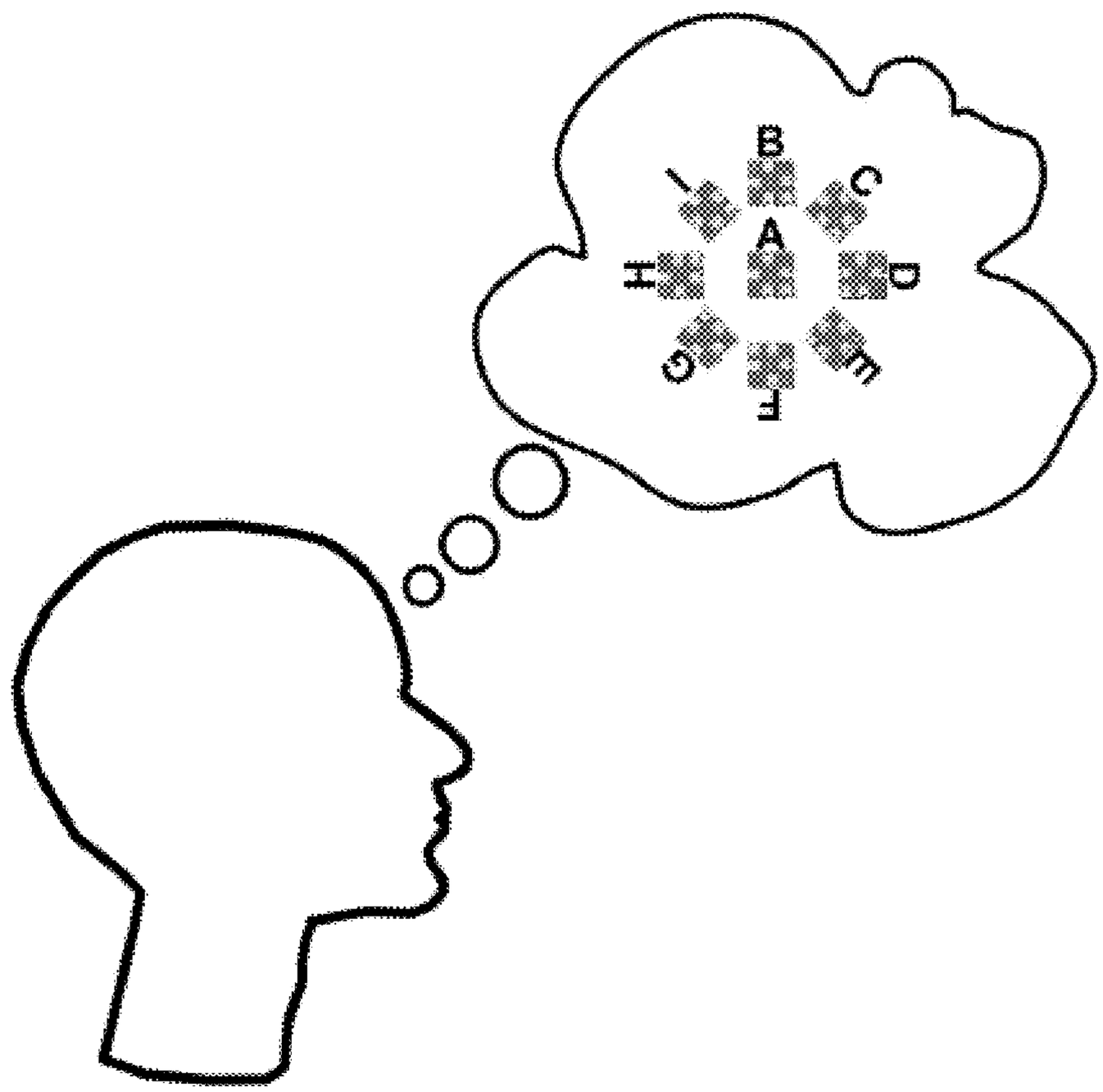

FIG. 21

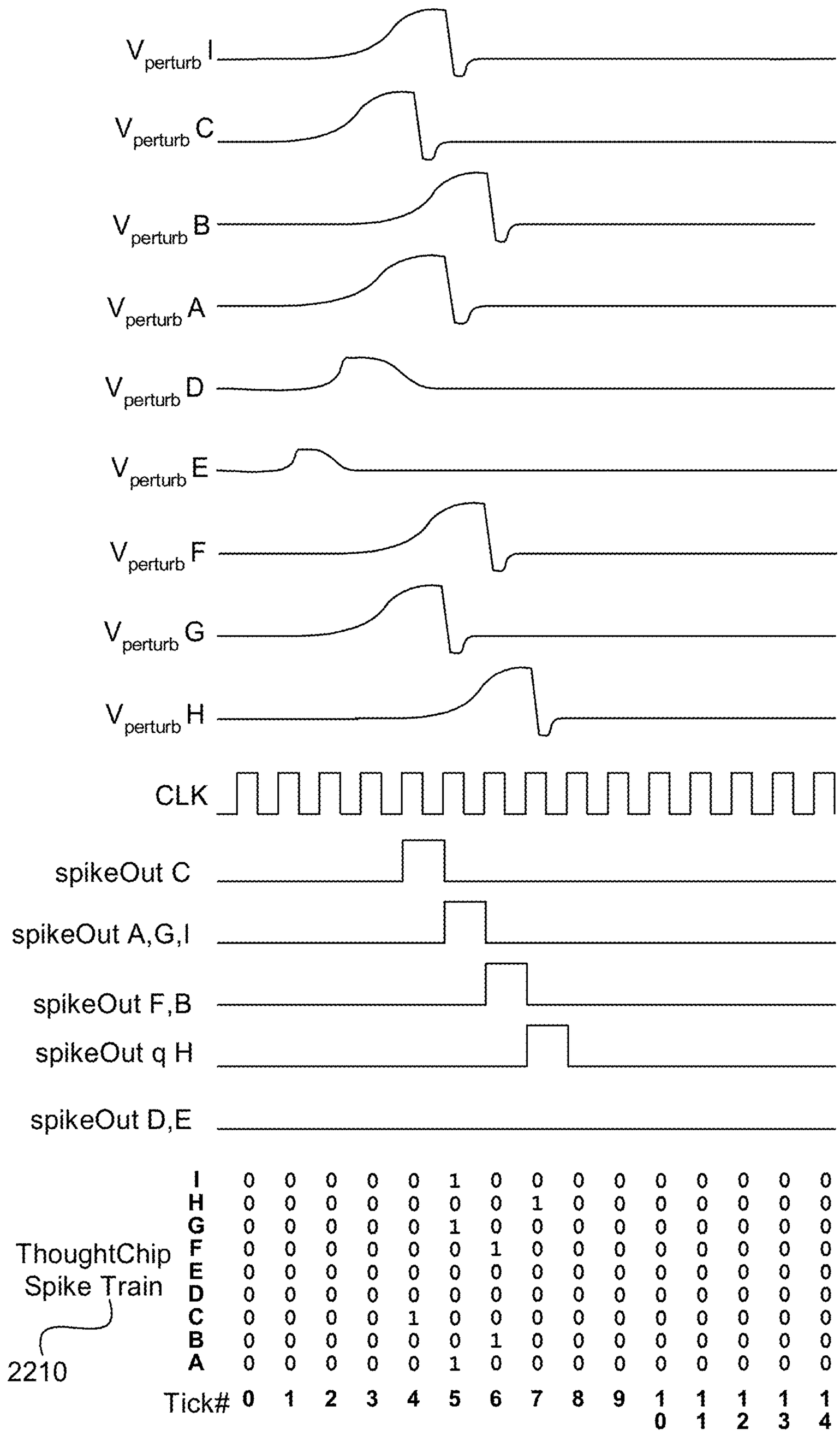
$V_{perturb}$ I
$V_{perturb}$ C
$V_{perturb}$ B
$V_{perturb}$ A
$V_{perturb}$ D
$V_{perturb}$ E
$V_{perturb}$ F
$V_{perturb}$ G
$V_{perturb}$ H
CLK
spikeOut C
spikeOut A,G,I
spikeOut F,B
spikeOut q H
spikeOut D,E
ThoughtChip Spike Train
2210
I 0 0 0 0 0 1 0 0 0 0 0 0 0 0 0
H 0 0 0 0 0 0 0 1 0 0 0 0 0 0 0
G 0 0 0 0 0 1 0 0 0 0 0 0 0 0 0
F 0 0 0 0 0 0 1 0 0 0 0 0 0 0 0
E 0 0 0 0 0 0 0 0 0 0 0 0 0 0 0
D 0 0 0 0 0 0 0 0 0 0 0 0 0 0 0
C 0 0 0 0 1 0 0 0 0 0 0 0 0 0 0
B 0 0 0 0 0 0 1 0 0 0 0 0 0 0 0
A 0 0 0 0 0 1 0 0 0 0 0 0 0 0 0
Tick# 0 1 2 3 4 5 6 7 8 9 10 11 12 13 14

FIG. 22

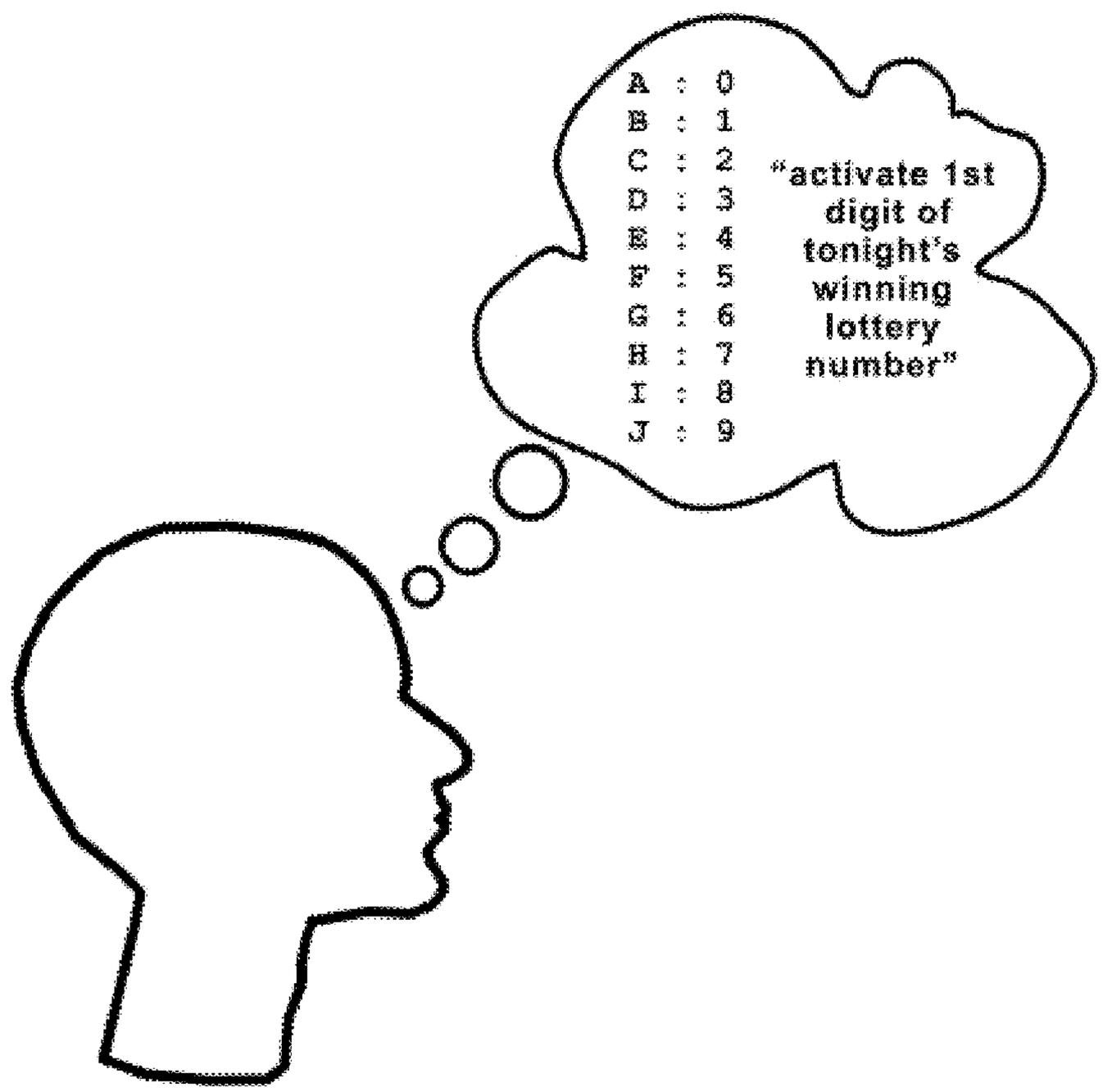
A : 0
B : 1
C : 2
D : 3
E : 4
F : 5
G : 6
H : 7
I : 8
J : 9
"activate 1st digit of tonight's winning lottery number"

FIG. 23

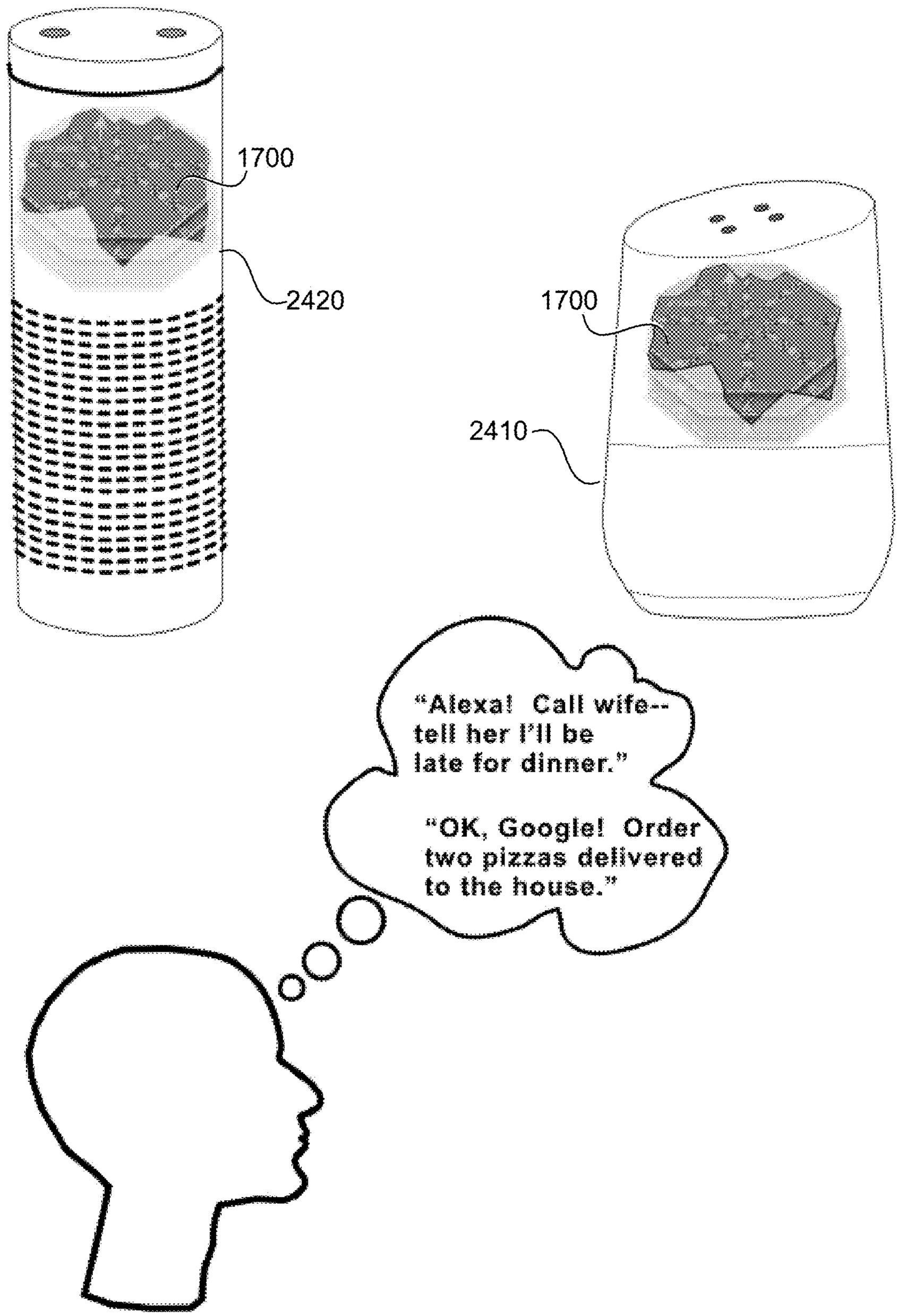
1700
2420
1700
2410
"Alexa! Call wife--
tell her I'll be
late for dinner."
"OK, Google! Order
two pizzas delivered
to the house."

FIG. 24

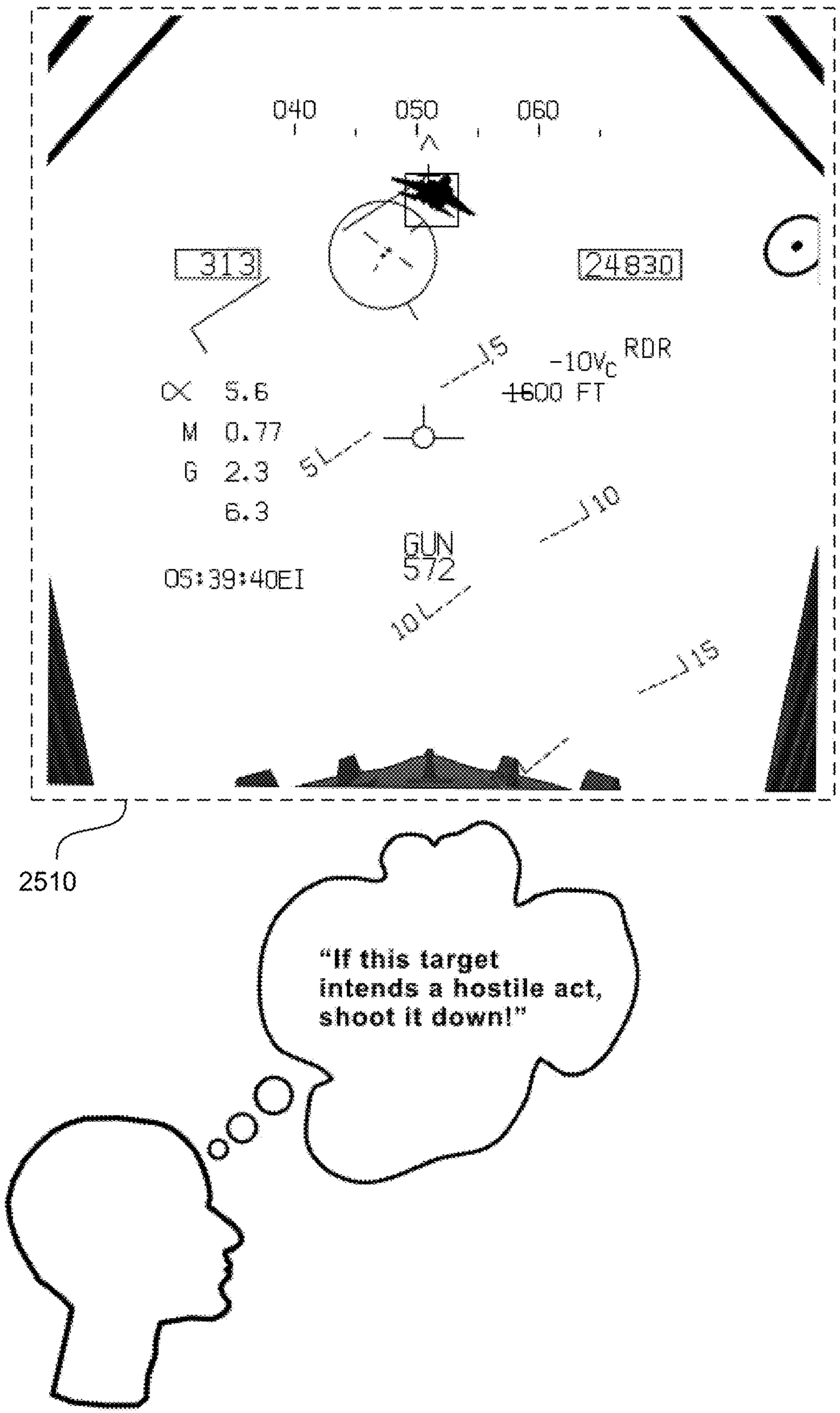
040
050
060
313
24830
RDR
-10V
1600 FT
α 5.6
M 0.77
G 2.3
6.3
GUN
572
05:39:40EI
5L
10L
J5
J10
J15
2510
"If this target intends a hostile act, shoot it down!"

FIG. 25

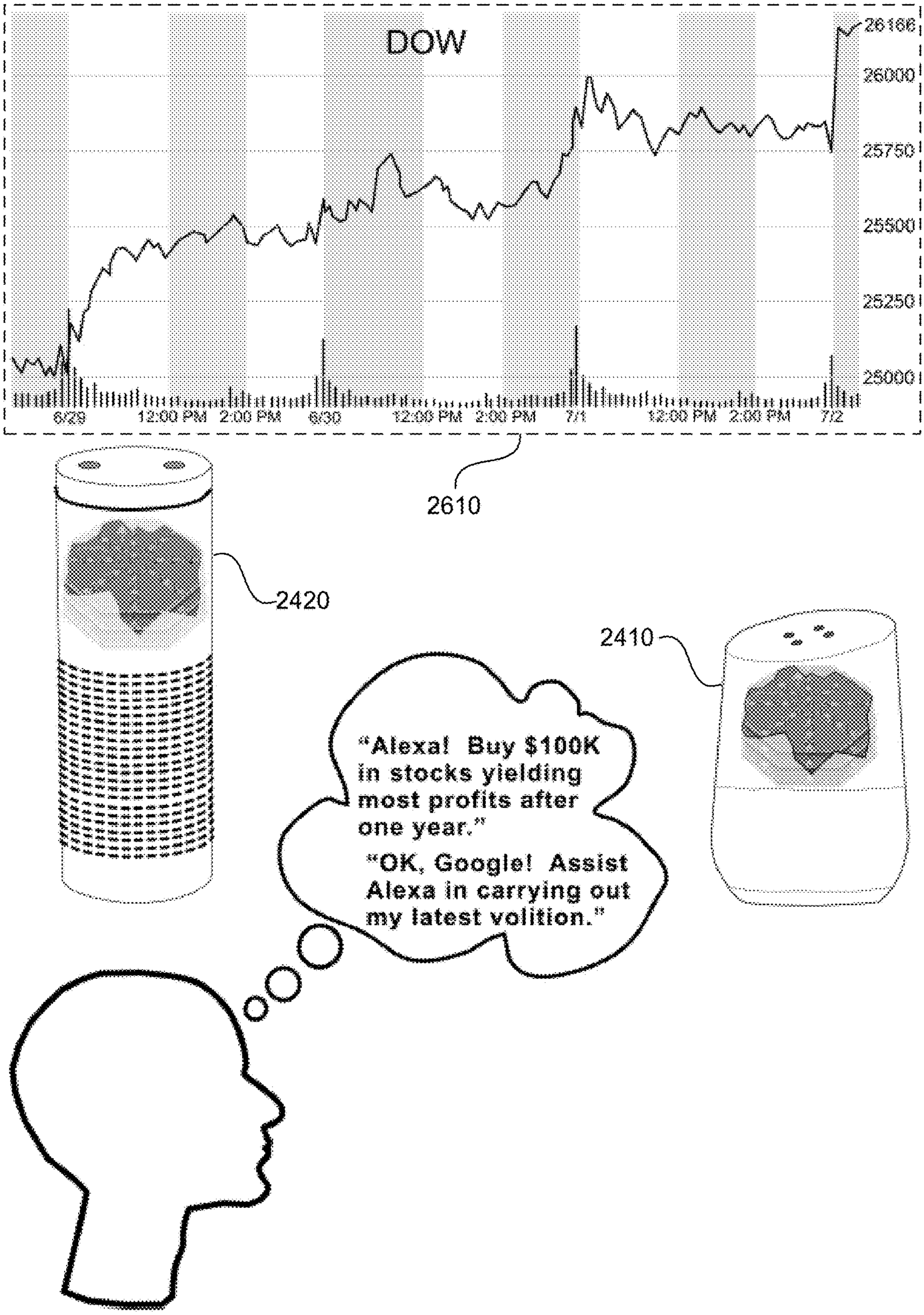
DOW
26166
26000
25750
25500
25250
25000
6/29
12:00 PM
2:00 PM
6/30
12:00 PM
2:00 PM
7/1
12:00 PM
2:00 PM
7/2
2610
2420
2410
"Alexa! Buy $100K in stocks yielding most profits after one year."
"OK, Google! Assist Alexa in carrying out my latest volition."

FIG. 26

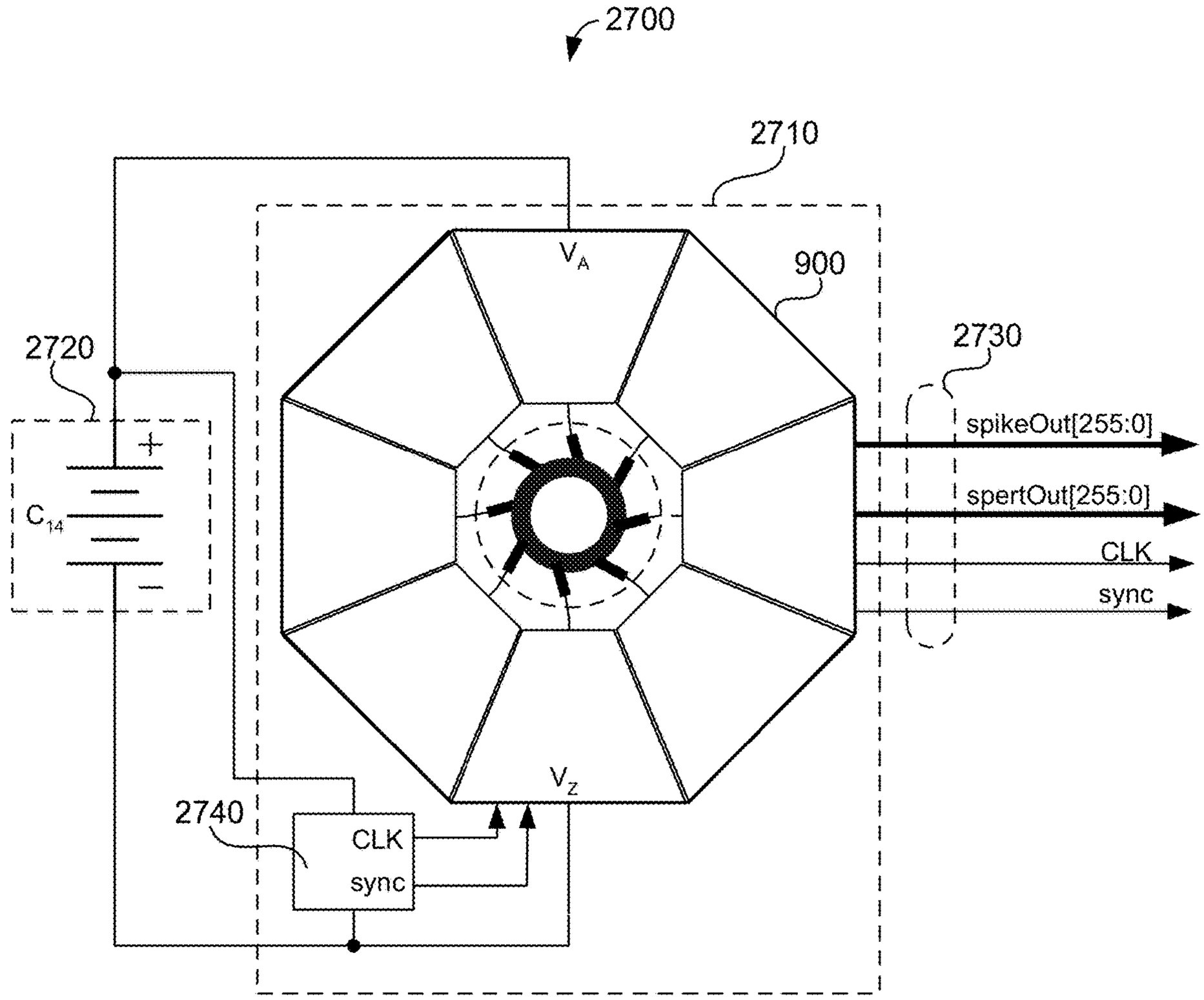
2700
2710
V_A
900
2720
2730
+
C_{14}
−
spikeOut[255:0]
spertOut[255:0]
CLK
sync
V_Z
2740
CLK
sync

FIG. 27

COMPLEX NANOSTRUCTURE FORMING A TRANSISTOR

CROSS-REFERENCE TO RELATED APPLICATIONS

[0001] This application claims the priority benefit under 35 U.S.C. § 119(e) of U.S. Provisional Application No. 63/053,907 filed on Jul. 20, 2020, the disclosure of which is incorporated herein by reference in its entirety.

TECHNICAL FIELD

[0002] The present disclosure relates generally to nanostructures, and more particularly to a complex nanostructure constructed from carbon nanotubes and variously configured to function as a bifurcated nanostructure transistor, a nanostructure multiplexer, or an information unfolder.

BACKGROUND

[0003] From research done several decades ago up until the present by both private and government agencies primarily of the United States, Russia/USSR, China, and Japan, it has been established beyond any doubt that there exists a bidirectional psychotronic/psychoenergetic (these terms used interchangeably throughout the present disclosure) channel of communication. To demonstrate this fact, volumes of declassified, once secret and highly guarded research and corresponding documents relating to the United States Defense Intelligence Agency involvement in weaponizing (and defending against) this "phenomenon" can be located and freely downloaded at the public CIA.gov library reading room website using search terms such as, "Star Gate," "Grill Flame," "Center Lane," "psychoenergetics," "psychotronic," "remote viewing," "remote action," "SRI International," "Hal Puthoff," and "Ingo Swann," for example.

[0004] Chief among them is an article by respected physicists Dr. Hal Puthoff and Dr. Russell Targ published in the prestigious and peer-reviewed *Proceedings of the IEEE* (March 1976) journal entitled, "A Perceptual channel for information transfer over kilometer distances: Historical perspective and recent research."

[0005] Another article by Puthoff published in the prestigious *Journal of Scientific Exploration* (vol. 10, 1976) entitled, "CIA-Initiated Remote Viewing Program at Stanford Research Institute," can be found in the public online CIA.gov reading room.

[0006] Several declassified documents found online at the CIA.gov reading room website describe psychoenergetics as certain classes of human capabilities in the realm of parasychological or PSI phenomenon, further breaking it down into two general informational and energetic categories:

[0007] 1. Remote viewing (RV)/Extrasensory Perception (ESP)—the ability to describe remote geographical areas or to describe concealed data via undefined transmission mechanisms.

[0008] 2. Psychokinesis (PK)—the mental ability to influence physical or biological systems without use of known physical mechanisms.

[0009] Research has also been performed by quantum physicists on what is referred to as the "vacuum state" and information transfer within the vacuum state. Paraoanu, G. S., "The quantum vacuum," O. V. Lounasmaa Laboratory, School of Science, Aalto University, Finland, first provides a brief history of the vacuum up to the quantum era beginning with Greek atomists Leucippus and Democritus, all the way up to Einstein. Paraoanu then delves into the architecture of the vacuum discussing, among others, such topics as the observable effects, and their properties, due to the quantum vacuum, concluding by noting the fact that energy itself cannot be teleported within the quantum vacuum, but rather, the "information" about such energy is teleported. When a measurement is made, only then does it manifest as energy at the destination, and this has been called "quantum energy teleportation."

[0010] Paraoanu may explain the phenomenon called psychoenergetics, in that what may be happening is that "information" is what is really being psychoenergetically transferred, and when the target perceives (measures it) by whatever means, only then does the teleported information manifest as a physical "energetic." Paraoanu is hereby incorporated herein in its entirety.

[0011] Tapia, O., "Photonic Framework: Cues To Decode Quantum Mechanics," Chemistry Ångström, Uppsala University, Sweden, discusses photons, electrons, and other subatomic particles, especially as they relate to information transfer within a vacuum, i.e., the interior of carbon nanotubes. Tapia describes Quantum Electro Dynamics (QED), entanglement, and information transfer at the quantum level. Tapia states that "vacuum states carry endless information" and "entanglement events integrate probing devices leading to q measurements seen as physical processes." This establishes further that electrons are subatomic particles and consequently are subject to entanglement and they supplement detection devices. Information is the "stuff" conveyed by quantum processes and "vacuum state information enters as labels re-normalizing the base set." Tapia is hereby incorporated herein in its entirety.

[0012] While it has been scientifically established beyond any doubt that there exists a psychoenergetic channel of information transfer, up until now, there has been no known repeatable means or method for a machine to reliably extract and exploit desired information from this vacuum state information channel. Some of the methods for "remote action" developed by researchers with modest success include remote mental perturbation of EEGs, true random number generators, piezo-electric sensors, and thermistors to name a few. However, one problem with all of these approaches is that none of them have direct access to the vacuum state, where all the information in the universe, past, present and future can be accessed. Another problem with these approaches is that, even if, arguendo, those methods could access the vacuum state where all the information is folded up into the tiniest bit of nothing, such methods have no way of unfolding this vacuum state information and thereby make use of it.

[0013] The present disclosure describes such an apparatus and method for not only accessing the folded up information from the vacuum state, but also unfolding such information and making use of it. The disclosure employs specially modified carbon nanotubes and carbon nanotori arranged and assembled on a special SiO2 substrate using an assembly jig etched into it to exploit this psychotronic channel of communication by way of a quantum information extractor or, more precisely, vacuum state information "unfolder" and thus can also be employed as a type of quantum computer with the potential to deliver information (in human readable form if necessary) directly to its outputs without intervening

computations. The present disclosure can also be configured to provide data to a conventional convolutional or recurrent artificial neural network and/or spiking artificial neural network, which with proper training algorithm, can be employed to implement systems based on conscious computers and machines.

SUMMARY

[0014] The present invention is a complex nanostructure, which includes a first nanostructure component having at least one aperture in a side thereof; at least one second nanostructure component having a first end and a second end, wherein the first end of each of the at least one second nanostructure is inserted through a corresponding one of the at least one aperture in the first nanostructure, thereby forming at least one junction; and means for causing current to flow selectively through the first nanostructure or the at least one second nanostructure. For example, optional fields may enable current flow.

[0015] In one embodiment, the complex nanostructure is a bifurcated nanostructure transistor. In this embodiment, the first nanostructure component is a first linear carbon nanotube forming a nanostructure trunk having a first end, a second end, and the aperture in a side thereof. The at least one second nanostructure component is a second linear carbon nanotube forming a nanostructure L, wherein the first end of the nanostructure L is inserted through the side of the nanostructure trunk via the aperture, thereby forming a junction, and the nanostructure L is angled away from the first end of the nanostructure trunk. The bifurcated nanostructure transistor also includes a first electrical contact at the first end of the nanostructure trunk; a second electrical contact at the second end of the nanostructure trunk; and a third electrical contact at the second end of the nanostructure L. Whenever a voltage potential across two or more of the first, second, and third electrical contacts is present, current flows selectively from any of the electrical contacts having greater potential to any of the contacts having lesser potential, thereby providing a transistor effect.

[0016] Either or both nanotubes may optionally be decorated with genetic material such as single-strand or double-strand human DNA segments (especially that of a percipient donor) and/or may be modified by e-beam or ozone gas to add defects into the nanotubes to alter electrical/functional characteristics of the resulting transistor.

[0017] The bifurcated carbon nanotube transistor may be specially constructed using a substrate prefabricated with an assembly jig etched into it using either chemical etch or Focused Ion Beam (FIB), for example. During the assembly process, the first carbon nanotube may be positioned into a respective jig trench using, for example, an Atomic Force Microscope (AFM) or by using an AC dielectrophoresis (DEP) method. The first carbon nanotube, hereinafter referred to as the "trunk," is slightly wider in diameter than the second carbon nanotube, hereinafter referred to as the "L."

[0018] In the example 3D models provided in the present disclosure [6,6] metallic carbon nanotubes are employed as the trunk and [6,0] semiconducting carbon nanotubes are employed as the "L", which is described in greater detail below. With a [6,6] chiralty, the metallic carbon nanotubes in the exemplary 3D models have a diameter of roughly 2.45 nanometers, while the [6,0] semiconducting carbon nanotubes have a diameter of roughly 1.5 nanometers.

[0019] Once the trunk is in position, an e-beam may be employed to burn an orifice/incision in the trunk's side large enough to accept one end of the "L" at approximately a 30-degree angle from perpendicular away from the input end of the trunk. Once joined in this manner, the result is a bifurcated carbon nanotube transistor that can be steered psychotronically using only the volition of a percipient directed at it.

[0020] In another embodiment, the complex nanostructure includes a circular carbon nanotorus made from a first carbon nanotube formed into a circle, the first carbon nanotube having a plurality of apertures in a side thereof facing radially outward from a center of the nanotorus. The nanostructure also includes a plurality of linear carbon nanotubes having first and second ends and a diameter smaller than a diameter of the first carbon nanotube, wherein the first end of each of the plurality of linear carbon nanotubes is inserted through one of the apertures in the first carbon nanotube, thereby forming a plurality of junctions. One of the plurality of linear carbon nanotubes is configured as an axion of a nanostructure multiplexer while the remaining linear carbon nanotubes are configured as dendrites of the nanostructure multiplexer. The multiplexer may also function as an information channel selector.

[0021] Like the bifurcated nanostructure transistor above, the multiplexer/information channel selector may be constructed using a substrate prefabricated with an assembly jig etched into it. The assembly jig resembles a bicycle hub with spokes coming out of it at a 30-degree angle from perpendicular. The nanotorus aspect, hereinafter referred to as the psyclotron, of the multiplexer is slightly wider in diameter than the "L" carbon nanotubes that are inserted into its sides at 30-degree angles, forming the dendrites and axion of the artificial neuron/multiplexer, the psyclotron.

[0022] The nanotorus for the psychlotron may be placed into position using an AFM or DEP so that it drops into its circular seat etched into the substrate. Once in position, an e-beam may be used to incise the outer sidewall of the psychlotron at each intersection where each "L" will be inserted using either an AFM or DEP method.

[0023] The psyclotron and/or nanotubes may optionally be decorated with genetic material such as single-strand or double-strand human DNA segments (especially that of a percipient donor) and/or may be modified by e-beam or ozone gas to add defects into the tubes to alter electrical/functional characteristics of the resulting multiplexer/information channel selector. The multiplexer/information channel selector may function as an artificial neuron.

[0024] In another embodiment the complex nanostructure is configured to unfold information carried by electrons. The complex nanostructure information unfolder includes an array of carbon nanotubes joined at points to form binary junctions within the array, the array having an input connection and a plurality of output connections; and a plurality of electron-detection spiker circuits connected to the plurality of output connections. Whenever a voltage potential is present across the array, electrons flow through the plurality of carbon nanotubes and at each junction, make a binary choice of which route to follow in order to arrive at a given electron-detection spiker circuit. A distribution of arriving electrons across the plurality of electron-detection spiker circuits is indicative of information carried by the electrons.

[0025] In one embodiment of the information unfolder, the array of carbon nanotubes includes one or more bifurcated

carbon nanotube transistors connected to each dendrite "L" of the multiplexer described above. The outputs of the bifurcated carbon nanotube transistors go to a "spiker" circuit that generates a spike on its output when the charge coming in reaches a pre-programmed upper trigger point threshold. In parallel with each spike generator is a "spert" circuit that generates a single-clock pulse on its output when the charge coming in reaches a per-programmed lower trigger point threshold, which is less than the upper trigger point threshold of a "spike" trigger point.

[0026] The main purpose of the spert circuit is to provide an indicator for those outputs that do not reach the upper trigger point (but otherwise did reach the lower spert trigger point) as to whether they were deprived of energy, indicating that energy was somehow taken away and instead used to trigger a spike in a different spiker circuit. Stated another way, in a dead universe, none of the outputs should ever spike because they are never psychotronically perturbed into reaching the spike firing threshold, in that, in its quiescent, unperturbed state, there is only so much current entering the system over a given period of time, such that, in a dead universe (i.e., not perturbation arising out of a conscious volition), the current is evenly distributed among all the spiking circuits, in that the only way to produce a spike on a given output is for current to somehow be deliberately diverted to that or other particular spiking circuits. The spert circuit lower trigger point is set so that in a dead universe it will always (or at least almost always) produce a spert on its output during each synchronized frame period. If a spert does not happen during a particular synchronized frame, especially when a spike was generated on a different spiker output, this is an indicator that that particular spert circuit was deprived of energy during that cycle.

[0027] In another embodiment of the information unfolder, the array of carbon nanotubes includes a plurality of bifurcated nanostructure transistors configured in a plurality of rows. Each of the bifurcated nanostructure transistors includes a carbon nanotube trunk having a first end, a second end, and an aperture in a side thereof; and a carbon nanotube L having a first end and a second end, wherein the first end of the carbon nanotube L is inserted through the side of the carbon nanotube trunk via the aperture, thereby forming a junction, and the carbon nanotube L is angled away from the first end of the carbon nanotube trunk. The bifurcated nanostructure transistors also include an electrical input contact at the first end of the carbon nanotube trunk; a first electrical output contact at the second end of the carbon nanotube trunk; and a second electrical output contact at the second end of the carbon nanotube L.

[0028] A first row of the array includes a single bifurcated nanostructure transistor, and the electrical input contact of the single bifurcated nanostructure transistor provides an input for the entire array. Succeeding rows of the array include twice as many bifurcated nanostructure transistors as a preceding row, and the first and second electrical output contacts of each transistor in the preceding row are electrically connected to the electrical input contact of first and second transistors in the succeeding row. A last row of the array includes a plurality of bifurcated nanostructure transistors, and the first and second electrical output contacts of each transistor in the last row are electrically connected to corresponding electron-detection spiker circuits of the plurality of electron-detection spiker circuits. Whenever the voltage potential is present across the array, electrons flow through the plurality of bifurcated nanostructure transistors making binary choices of which route to follow at each junction of each transistor in order to arrive at a given electron-detection spiker circuit. Each spiker circuit of the plurality of electron-detection spiker circuits generates a spike on an output when a charge arriving from a respective bifurcated nanostructure transistor reaches a pre-programmed upper trigger-point threshold, thereby indicating a distribution of arriving electrons across the plurality of electron-detection spiker circuits, the distribution being indicative of information carried by the electrons.

[0029] The spike train produced by the information unfolder may be fed into the input of an artificial spiking neural network for further processing, the network being part of a information processing system run on a computer. Alternatively, the analog output of each instrumentation amplifier inside each spiker and spert circuit may be brought out and quantized with an analog-to-digital (A/D) converter and fed into a conventional convolutional or recurrent artificial neural network in lieu of a spiking neural network. For purposes of the instant disclosure, these two variations are herein referred to interchangeably as electron-detection spiker circuits.

[0030] Further features and benefits of embodiments of the disclosed apparatus will become apparent from the detailed description below.

BRIEF DESCRIPTION OF THE DRAWINGS

[0031] In the following section, the invention will be described with reference to exemplary embodiments illustrated in the figures, in which:

[0032] FIG. **1***a* is a diagram of a psychotronically-steerable, bifurcated "L-field" conscious-gate transistor built from two carbon nanotubes, having a metallic "trunk" and a semiconducting "L";

[0033] FIG. **1***b* is a diagram of a psychotronically-steerable, bifurcated "trunk-field" conscious-gate transistor built from two carbon nanotubes, having a semiconducting "trunk" and a metallic "L";

[0034] FIG. **1***c* is a diagram of a psychotronically-steerable, bifurcated "partial trunk-field" conscious-gate Field-Effect Transistor built from two carbon nanotubes, having a semiconducting "trunk" and a metallic "L";

[0035] FIG. **1***d* is a diagram of a psychotronically-steerable, bifurcated "partial trunk/L-field" conscious-gate transistor built from two carbon nanotubes, having a semiconducting "trunk", a semiconducting "L", and optional DNA decoration, single or double-stranded;

[0036] FIG. **1***e* is a diagram of a psychotronically-steerable, bifurcated "full trunk/L-field" conscious-gate transistor built from two carbon nanotubes, having a semiconducting "trunk", a semiconducting "L", and optional DNA segment, single or double-stranded;

[0037] FIG. **1***f* is a diagram of a psychotronically-steerable, bifurcated "full trunk/L-field" conscious-gate transistor built from two carbon nanotubes, having a semiconducting "trunk", a semiconducting "L", and optional DNA segment, single or double-stranded, and deliberate defects;

[0038] FIG. **1***g* is a diagram of a psychotronically-steerable, bifurcated conscious-gate transistor built from one metallic carbon nanotube as the trunk and DNA segment acting as a wire for the "L" after being inserted into the

metallic carbon nanotube trunk, the DNA being either single or double stranded and, optionally, impregnated with silver and/or nickel nanoparticles;

[0039] FIG. **1***h* is a schematic diagram showing a voltage follower method for buffering the output of an "L-field" conscious-gate transistor using an operational amplifier;

[0040] FIG. **1***i* is a schematic diagram showing an instrumentation amplifier method for buffering the output of a trunk-field conscious-gate transistor;

[0041] FIG. **1***j* is a diagram showing a conscious-gate transistor built from two metallic carbon nanotubes;

[0042] FIG. **2** is a diagram of a bidirectional, multi-channel conscious-gate multiplexer/psyclotron that can also function as a pseudo-neuron, built from one metallic carbon nanotorus with six smaller radius semiconducting carbon nanotubes inserted into the nanotorus outer radius wall, and, optionally decorated with DNA;

[0043] FIG. **3** is a diagram of the top portion of a vacuum state information unfolder built from a carbon nanotorus and five conscious-gate transistors binning-out into their respective spike generators;

[0044] FIG. **4** is a schematic diagram for a spike generator;

[0045] FIG. **5** is a diagram of the bottom half of a vacuum state information re-folder built from a carbon nanotorus and five conscious-gate transistors with their inputs flipped in relation to their corresponding conscious-gate transistors in the top portion of the vacuum state information unfolder;

[0046] FIG. **6** is a diagram of the vacuum state information unfolder showing the relationship between the upper half unfolder and the bottom half re-folder and spike generators;

[0047] FIG. **7** is a diagram of a different version of a vacuum state information unfolder that uses a gradual charge shedding method of information extraction;

[0048] FIG. **8** is a diagram of a vacuum state information unfolder/re-folder with 64-bit spike train output (32 bits of which are spikes and the other 32 bits sperts) showing the relationship between upper unfolder portion to the lower re-folder portion, both comprising bifurcated conscious-gate carbon nanotube transistors, all metallic in this instance, and having bidirectional unfolding/re-folding ability;

[0049] FIG. **9** is a diagram of a bidirectional vacuum state information unfolder/re-folder with 512-bit spike train output (256 bits of which are spikes and the other 256 bits sperts) built from eight unfolder/re-folders of FIG. **8** and two carbon nanotorus conscious-gate psyclotrons (the second psyclotron not shown in this diagram because it's underneath);

[0050] FIG. **10** is a diagram of an alternative to the bifurcated carbon nanotube conscious-gate transistor, this one being built from two strips of graphene with optional DNA decoration and which might be substituted for use in the bidirectional vacuum state information unfolder/re-folder of FIG. **9**;

[0051] FIG. **11** is a diagram of another alternative to the bifurcated carbon nanotube conscious-gate transistor, this one being built from a light-emitting diode (LED) and two bi-polar junction transistor (BJT) photo-transistors optionally decorated with DNA through which photons emitted by the LED penetrate, impacting the photo-sensitive base of the BJTs;

[0052] FIG. **12** is a diagram of a unidirectional alternative to the 512-bit, bidirectional vacuum state information unfolder/re-folder of FIG. **9**, but which employs the bifurcated conscious BJT of FIG. **11**;

[0053] FIG. **13***a* is a 3D model/rendering of a silicon substrate fabricated as a jig for assembling a bifurcated conscious-gate transistor and which also shows an optional reference character/symbol which might be used as an address or coordinate specifier;

[0054] FIG. **13***b* is the 3D model/rendering of FIG. **13***a* showing how the substrate is employed as a jig, but with a "trunk" carbon nanotube laid in place as a first step in the assembly process;

[0055] FIG. **13***c* is the 3D model/rendering of FIG. **13***b*, zoomed-in over the location where, using the e-beam of a Transmission Electron Microscope (TEM), the trunk carbon nanotube is modified to accept insertion of one end of a smaller diameter carbon nanotube or DNA strand to form the "L" of the bifurcated conscious-gate transistor and also showing the etched jig trenches where the carbon nanotubes and/or DNA strand will eventually rest;

[0056] FIG. **13***d* is similar to FIG. **13***c*, but viewed from a different angle to show the orifice created in the side of the trunk carbon nanotube where the "L" will be inserted during assembly;

[0057] FIG. **13***e* is similar to FIG. **13***b*, except showing both the trunk carbon nanotube and the "L" carbon nanotube laid in place and positioned within their respective trenches of the assembly jig in the silicon substrate;

[0058] FIG. **13***f* is a 3D rendering showing a trunk metallic carbon nanotube resting in its assembly trench and the "L" semiconducting carbon nanotube resting in its assembly trench, both in position immediately prior to the business end of the "L" being inserted into the orifice of the trunk created by TEM e-beam;

[0059] FIG. **13***g* is similar to FIG. **13***f*, except showing the conscious junction forming the conscious-gate transistor after insertion of the "L" into the trunk;

[0060] FIG. **13***h* is similar to FIG. **13***g*, except viewed from a different perspective;

[0061] FIG. **13***i* is similar to FIG. **13***f*, except viewed from a wider perspective and also showing the "L" carbon nanotube after being decorated with single-strand DNA;

[0062] FIG. **13***j* is similar to FIG. **13***i*, except with a view down the interior of the trunk carbon nanotube;

[0063] FIG. **13***k* is similar to FIG. **1**, except this time viewed from a wider perspective;

[0064] FIG. **13***l* is similar to FIG. **1**, except it is showing single-stranded DNA alone being employed as the "L", the ssDNA optionally being impregnated with silver and/or nickel nanoparticles;

[0065] FIG. **13***m* is similar to FIG. **13***l*, except viewed from a wider perspective;

[0066] FIG. **14***a* is a 3D model/rendering showing the trenches forming an assembly jig etched into a silicon substrate to ultimately be used to form a an artificial conscious-gate multiplexer/neuron ("psyclotron") built from a carbon nanotorus and carbon nanotubes;

[0067] FIG. **14***b* is similar to FIG. **14***a*, except also showing the psyclotron's carbon nanotorus resting in its trench and subsequently modified by TEM e-beam to create the orifices the "L" carbon nanotubes or DNA wires will be inserted into during assembly;

[0068] FIG. **14***c* is similar to **14***b*, except showing the "L" carbon nanotubes after insertion into their respective orifices;

[0069] FIG. **14***d* is similar to FIG. **14***c*, except showing the psyclotron after being decorated with single-strand DNA;

[0070] FIG. **14***e* is similar to FIG. **14***d*, except from an overhead view showing the aspect angles of the "L" dendrite nanotubes in relation to the aspect angle of the "L" axion nanotube and also showing current flow direction when the "L" dendrites are functioning as inputs, with the "L" axion functioning as an output or vice-versa;

[0071] FIG. **14***f* is similar to FIG. **14***e*, except showing the "L" axion carbon nanotube at a higher position and a different aspect angle;

[0072] FIG. **14***g* is similar to FIG. **14***f*, except showing the "L" axion carbon nanotube at a middle position and being used as an input and the other "L" carbon nanotubes being employed as outputs as indicated by the circular arrow showing current flow direction, thereby forming a conscious-gate multiplexer/psyclotron;

[0073] FIG. **15** is a computer rendering of a proposed carrier for mounting the conscious-gate transistor onto either before, after, or during assembly of the actual conscious-gate transistor onto its substrate/jig to form a functioning, surface-mount, "ThoughtChip", which can then be used in a conscious system/machine;

[0074] FIG. **16** is computer rendering of a proposed surface-mount "ThoughtPad" multi-chip carrier comprising an array of ThoughtChips mounted on its surface;

[0075] FIG. **17** is a computer rendering of a proposed "ThoughtStack" comprising multiple ThoughtPads to form a multidimensional thought input device for artificial neural networks and conscious machines;

[0076] FIG. **18** is a graphic showing how a percipient directs his thoughts and volition to "steer" the output of a ThoughtPad to produce a spike or spike train in the "K" direction, which can be used to train a spiking artificial neural network;

[0077] FIG. **19** is an exemplary timing diagram showing the relationship between a system clock, sync signal and exemplary outputs, both analog and digital, of a ThoughtPad in response to the percipient of FIG. **18** imposing a volition upon the ThoughtPad to steer in the "K" direction;

[0078] FIG. **20** is an exemplary graphic showing a percipient imposing a volition upon a ThoughtPad to spike an "R" on its output, without any directional or magnitude component to the volition;

[0079] FIG. **21** is an exemplary graphic showing a percipient imposing a volition upon a ThoughtPad to simultaneously spike an "A, B, C, D, E, F, G, H, I" on its output, without any directional or magnitude component to the volition;

[0080] FIG. **22** is an exemplary timing diagram showing the relationship between a system clock and outputs, both analog and digital, of a ThoughtPad in response to the percipient of FIG. **21** imposing a volition up the ThoughtPad to produce a spike train on its output that then can be fed into an artificial spiking neural network;

[0081] FIG. **23** is an exemplary graphic showing a percipient imposing a volition upon a ThoughtPad to produce a spike on the output of one of its ThoughtChips whose label/symbol corresponds to a single numeral associated with it by percipient, such that the emitted spike's symbol corresponds to that evenings lottery number first digit, such lottery drawing not having happened yet;

[0082] FIG. **24** is an exemplary graphic showing how existing virtual assistants can be adapted to include a ThoughtPad or ThoughtStack so they can become responsive to a percipient's volition alone;

[0083] FIG. **25** is an exemplary graphic showing how weapon systems can be adapted to include a ThoughtPad or ThoughtStack so they can become responsive to a percipient's volition alone and that percipient can be remotely situated with respect to the weapon system, ThoughtPad/Stack, and/or physical war zone;

[0084] FIG. **26** is an exemplary graphic showing how the present invention can be incorporated into modern virtual assistants and employed to predict future stock market swings and make purchases accordingly to maximize profits of investors; and

[0085] FIG. **27** is an exemplary diagram of an electrically-isolated, immortal vacuum state information unfolder that can be connected via opto-couplers to a computer, in that it includes a carbon-14 battery, which has an estimated half-life of 5000 years.

DETAILED DESCRIPTION

[0086] The present disclosure will now be described more fully hereinafter with reference to the accompanying drawings, in which preferred embodiments of the disclosure are shown. In the below, for purposes of explanation and not limitation, specific details are set forth in order to provide a thorough understanding of the present disclosure. It will be apparent to one skilled in the art that the present disclosure may be practiced in other embodiments that depart from these specific details.

[0087] FIG. **1***a* is a diagram of the disclosed embodiment of the psychotronically-steerable, bifurcated "L-field" conscious-gate transistor built from two carbon nanotubes, having a metallic "trunk" and a semiconducting "L". The psychotronically steerable, bifurcated carbon nanotube (CNT) transistor **100** includes a carbon nanotube trunk **110**, carbon nanotube "L" **120**, an electrical contact **130** for the V_A end of the trunk, an electrical contact **150** for the V_Z end of the trunk, an electrical contact **170** for the V_L end of the "L," a field **160** for the "L", and an optional electrical contact **140** for the trunk/"L" junction **180** having a canted aspect ratio that facilitates vacuum state information transfer. In the disclosed exemplary embodiment, the trunk of FIG. **1***a* is metallic and the "L" is semiconducting. The trunk of FIG. **1***a* does not require a gate to conduct current because it is metallic. Since the "L" of FIG. **1***a* is semiconducting, a charge with field strength sufficient enough to allow current to flow must be present at **160**, otherwise, current will not flow through the "L."

[0088] As can be seen from FIG. **1***a*, when a voltage potential is applied across electrical contacts **130**, **150**, and **170** such that contact **130** is at a higher potential than contacts **150** and **170**, current flow has to choose between contacts **170** and **150** in terms of which path to take (and by how much for each path) to complete the circuit. Assuming it is the volition of a percipient directed at the vacuum state information unfolder and perhaps any percipient ssDNA that decorates **100**, that, in essence, makes that choice for the current that passes through **100**. Stated another way, because of the percipient's volition, the current really has no choice, in that it already knows what path to take before it ever reaches junction **180**. An analogy here would be the human body where a person manifests the volition to raise his left arm. How do the electrons that cause the proteins constituting his muscles to contract or expand know which path to take? Why does the person's right arm or leg not raise instead? The simple answer is that certain "instructions" or

"information" is imposed on those electrons, possibly via DNA or RNA, while in flight. Those electrons already know, long before they arrive, not only where to go, but also how to get there.

[0089] FIG. **1***b* is a diagram of a psychotronically-steerable, bifurcated "trunk-field" conscious-gate transistor built from two carbon nanotubes, having a semiconducting "trunk" and a metallic "L". FIG. **1***b* is similar to FIG. **1***a*, except the trunk of FIG. **1***b* is semiconducting and the "L" is metallic. Since the trunk is semiconducting, it requires a field **162**.

[0090] FIG. **1***c* is a diagram of a psychotronically-steerable, bifurcated "partial trunk-field" conscious-gate Field-Effect Transistor built from two carbon nanotubes, having a semiconducting "trunk" and a metallic "L". FIG. **1***c* is similar to FIG. **1***b*, except its field **164** does not extend past the junction **180** of FIG. **1***b*.

[0091] FIG. **1***d* is a diagram of a psychotronically-steerable, bifurcated "partial trunk/L-field" conscious-gate transistor built from two carbon nanotubes, having a semiconducting "trunk" and "L", and optional DNA decoration, single or double-stranded. FIG. **1***d* is similar to FIG. **1***a*, except the trunk and "L" are both semiconducting and share the same field **166**, in addition to the CNT transistor **100** being optionally decorated with dsDNA or ssDNA **168**.

[0092] FIG. **1***e* is a diagram of a psychotronically-steerable, bifurcated "full trunk/L-field" conscious-gate transistor built from two carbon nanotubes, having a semiconducting "trunk" and "L", and optional DNA segment, single or double-stranded. FIG. **1***e* is similar to FIG. **1***d*, except the entire trunk and entire "L" share the same field. Alternatively, field section **167** can be split from field **166** so that different potentials can be applied to them so as to essentially cause the trunk portion to behave similarly to a P-N junction diode.

[0093] FIG. **1***f* is a diagram of a psychotronically-steerable, bifurcated "full trunk/L-field" conscious-gate transistor built from two carbon nanotubes, having a semiconducting "trunk" and "L", and optional DNA segment, single or double-stranded, and deliberate defects. FIG. **1***f* is similar to FIG. **1***e*, except the trunk (and/or optionally the "L") is intentionally modified by e-beam or ozone during the assembly process to incorporate defects **169**, which alter the electrical characteristics/sensitivity of the CNT transistor **100**.

[0094] FIG. **1***g* is a diagram of a psychotronically-steerable, bifurcated conscious-gate transistor built from one metallic carbon nanotube as the trunk and a DNA segment acting as a wire for the "L" after being inserted into the metallic carbon nanotube trunk, the DNA segment being either single or double stranded and, optionally, impregnated with silver and/or nickel nanoparticles. FIG. **1***g* is similar to FIG. **1***a*, except it has no field and the "L" is a segment of ssDNA **122** used in lieu of a CNT. To enhance rigidity and to also alter electrical characteristics, the ssDNA **122** may be impregnated with, for example, silver (and/or nickel) nanoparticles.

[0095] FIG. **1***h* is a schematic diagram showing a voltage follower method for buffering the output of an "L-field" conscious-gate transistor using an operational amplifier. FIG. **1***h* shows a method for buffering the V_Z **150** output of the bifurcated CNT transistor **100**. In this instance, the trunk **110** is a metallic carbon nanotube and the "L" **122** is ssDNA segment, but transistor **100** may be built from any of the previously described combinations of metallic and/or semiconducting carbon nanotubes. When a potential is applied across V_A input **130** and V_{ZR} **151**, current will flow through the trunk **110** and resistor **152**. If V_L contact **170** is at the same or similar potential as V_{ZR} **151**, a portion of the current flowing through trunk **110** will also flow through "L" **122**. When no current is flowing through trunk **110**, the voltage drop across resistor **152** is zero and thus the output voltage **156** of operational amplifier **154** will be the same as **151**. If current is flowing through trunk **110**, the voltage drop across resistor **152** will be proportional to the amount of current flow and such will be reflected on the output **156** of op-amp **154**. In this instance, op-amp **154** is configured as a voltage follower buffer **158** with unity gain. Assuming current is simultaneously flowing through both the trunk **110** and the "L", any fluctuation of the current through "L" **122**, such as would be the case in a psychotronic perturbation of transistor **100**, will affect the current flow through resistor **152** and be reflected on the output **156** of op-amp **154**.

[0096] FIG. **1***i* is a schematic diagram showing an instrumentation amplifier method for buffering the output of a trunk-field conscious-gate transistor. FIG. **1***i* shows a method for buffering and amplifying the V_Z **150** output of transistor **100**. In this instance, transistor **100** of FIG. **1***i* is the same as transistor **100** of FIG. **1***h*, except the trunk of FIG. **1***i* has a field **162**, i.e., the trunk is semiconducting. The buffer/amplification circuit **159** of FIG. **1***i* employs an instrumentation amplifier **155** for its high common mode rejection ratio and extremely high input impedance. Instrumentation amplifier **155** measures the difference between the potential of V_Z **150** and V_{ZR} **151**. If no current is flowing through resistor **152**, the output **156** of amplifier **155** will be zero. If current is flowing, then the output **156** will be the voltage drop across resistor **152** times the preset gain of instrumentation amplifier **155**. Like the previously described buffer circuit of FIG. **1***h*, any perturbation of transistor **100** will appear on the output **156** of amplifier **155**, except amplified/multiplied by a factor determined by the gain of amplifier **155**.

[0097] FIG. **1***j* is a diagram showing a conscious-gate transistor built from two metallic carbon nanotubes. FIG. **1***j* is similar to FIG. **1***a*, except both the trunk **110** and the "L" **120** are metallic carbon nanotubes. Consequently, there is no field for either. At first glance, some might argue that because there is no field (i.e, no gate), then this cannot be a "transistor" in the commonly understood meaning of the term. On the contrary, this is in fact a transistor, because any psychoenergetic perturbation of junction **180** will affect which path (and how much) current will flow through V_L **170** and/or V_Z **150** at any given instant. Like the previously described transistors, this all metallic transistor may be decorated with DNA (single or double strand segment), RNA (folded or unfolded), enzymes, proteins, nanoparticles, and/or modified to include defects using e-beam or ozone.

[0098] FIG. **2** is a diagram of a bidirectional, multichannel conscious-gate multiplexer/psyclotron that can also function as a pseudo-neuron, built from one metallic carbon nanotorus with six smaller radius semiconducting carbon nanotubes inserted into the nanotorus outer radius wall, and, optionally decorated with DNA or RNA. The bidirectional conscious-gate multiplexer/channel-selector/combiner/distributor/neuron, hereinafter referred to as a "psyclotron" **200**, can be employed in several different ways. For example, the psyclotron can be employed as a channel

multiplexer, an artificial neuron, and a current distributor to name just a few uses. The psyclotron includes two or more dendrite "L(s)" **226**, two or more dendrite "L" electrical contact(s) **222**, two or more optional dendrite "L" field(s) **224**, a metallic or semiconducting carbon nanotori **210**, an axion "L" **212**, an axion "L" electrical contact **214**, and an optional axion "L" field **218**. The junctions where the "L"s are inserted into the carbon nanotori may optionally have electrical contacts **216**, which if present, should be symmetric, meaning they should all be the same material. In addition, the nanotori and/or "L"s may be decorated with ssDNA, RNA (folded or unfolded), enzymes, proteins, or nanoparticles. The dendrite "L"s **226** may be metallic (in which case no field **224** is required) or semiconducting (in which case a field is required), or the dendrite "L"s may be built from ssDNA and optionally impregnated with silver and/or nickel nanoparticles. The axion "L" **212** may be metallic (in which case no field **218** is required) or semiconducting (in which case field **218** is required), or the axion "L" may be built from ssDNA and optionally impregnated with, for example, silver or nickel nanoparticles.

[0099] The optional fields of the dendrite "L"s and/or the axion "L"s may be split-gate, meaning instead of one field per dendrite or axion, there are two or more fields, which operate at different potentials, which can be made to have the effect of a P-N junction diode. Although not specifically shown in **200**, the carbon nanotori **210** may be semiconducting or metallic. If metallic, then no field is required. If semiconducting, then a field is required.

[0100] Certain metallic nanotori have been shown to exhibit a persistent current phenomenon. Certain semiconducting nanotori have also been shown to exhibit a persistent current in the presence of a field. As an analogy of how the psyclotron **200** might be used, think of a traffic circle in the middle of a city where there are no stop signs, only yield signs. As you drive in one direction in the circle, you see not only informational or cautionary signs, which advise you which street to turn onto and what to look out for, but you also may see advertisements, which attempt to influence your purchasing choices. This is the main idea with the toroid in the instant invention. With the ssDNA decoration, the DNA passes instructions (subtle potentialities) to the electrons and any other subatomic or virtual particles that may be playing a role in the process. The DNA or RNA may also have the ability to alter or influence the electrons' spin while in such close proximity to it. The DNA or RNA translates the volition of the donor percipient into instructions the electrons and subatomic/virtual particles can carry out, in this case, where to turn or which dendrite "L" to enter into or exit from (since the psyclotron **200** can be used in either direction, which will be explained later in the present disclosure), similar to the way information transfer occurs in the human body.

[0101] At this point, it should be made very clear that the present invention is not intended to be implanted into the body. Although it could be implanted, it does not need to be implanted. The ssDNA (or segment thereof) is a stand-alone molecule and can survive indefinitely outside the body so long as it is protected from exposure to elements that would alter its chemistry.

[0102] So now the question is: "How does the ssDNA or RNA know that the donor percipient had a volition directed at it?" The simple answer: something akin to quantum entanglement. And because of that, such communication is instantaneous. Assuming that because the ssDNA decoration is so closely coupled to the vacuum state by way of the "tiniest bit of nothing" occupying the space inside the nanotube, where classical mechanics goes out the window, quantum physics comes into play, and, as a result, communication does not travel through classical space-time as we understand it. The tiniest bit of nothing inside one CNT is the same identical tiniest bit of nothing inside another CNT, meaning they occupy the same virtual point (which is not even a point) within the vacuum state, which is why information transfer between two different CNTs via this channel, no matter how distant the separation between them, is instantaneous.

[0103] This gives rise to the question, "Well then, since humans do not have, per se, carbon nanotubes within their body for DNA to couple onto, how does a human psychotronically transmit or receive information via the vacuum state communication channel?" Closest answer: via certain microtubules residing in neurons within the human body, which determine its shape and structure and provide, among other things, a channel of informational communication. While one of the roles of microtubules is to deliver materials and information into the neuron which continually alter its shape and structure, there are most likely microtubules that have sections that remain completely hollow, like the carbon nanotube. Furthermore, there may be some microtubules within a given neuron whose entire purpose is information transfer via the vacuum state communication channel, in that their interior diameter is typically on the order of only 17 nm, which, relatively speaking, is about 7 times larger than that of trunk CNTs employed in the instant disclosure 3D models.

[0104] From FIG. **2**, it can be seen that when semiconducting CNTs are employed as dendrite "L"s, their respective fields **224** can control the amount of conductance through that "L" proportional to the magnitude of that field, which can be used to apply, by way of a digital-to-analog (D/A) converter or fixed voltage reference, a weight to the VL **222**, which allows that dendrite "L" to mimic that aspect of a biological neuron. The same is true for the axion "L" **212** when semiconducting CNTs are employed for that purpose. Furthermore, when not explicitly being employed to mimic a biological neuron, **200** can be employed as a bidirectional multiplexer, provided, of course, that the dendrite "L"s are semiconducting CNTs and have respective fields. When axion **212** is a semiconducting CNT, its field **218** can be used to control the amount of current entering or exiting axion **212**.

[0105] FIG. **3** is a diagram of the top portion of a vacuum state information unfolder built from a carbon nanotorus and five conscious-gate transistors binning-out into their respective spike generators. FIG. **3** shows the upper half **350** of a 10-bit, bidirectional, conscious-gate, psychcotronically steerable, vacuum state information unfolder **300** comprising an ssDNA-decorated, all-metallic psyclotron **200**, five bifurcated conscious-gate transistors **100**, and ten spike/spert generators **400**. As can be seen from FIG. **3**, electrical current enters psyclotron VA contact **310** and eventually merges into the carbon nanotorus traffic circle where it receives information from the ssDNA decoration and eventually exits the traffic circle according to its informational instructions by way of one of the dendrite "L"s. The current then enters the prescribed "L" trunk **100** where the current then either continues down the trunk past the "L" junction or

exits via the "L" of bifurcated transistor, all according to the instructions it received while in the traffic circle of **200**. After exiting either the trunk or "L" of **100**, it then enters the respective "spiker" circuit **400**. If the charge at that moment (or at any moment within a given "sync" frame of **400**) is greater than the pre-programmed lower trigger point (LTP), a "spert" pulse exactly one clock in duration will be produced on its respective spert output **330**, otherwise the spert output will remain a logic 0 for at least one clock cycle. Simultaneous with the sampling of the LTP, if the charge at that moment is greater than the pre-programmed upper trigger point (UTP), a "spike" pulse exactly one clock in duration will be produced on its spike output **320**, otherwise the spike output will remain a logic 0 for at least one clock cycle. Each current that exits the bottom of the trunk or "L" of **100** enters their respective spiker **400** circuit, where it flows through a series resistor used for measuring potential and then exits the resistor as I_botm **340**.

[0106] FIG. **4** is a schematic diagram for a spike generator **400**. The circuit includes series resistor **406**, instrumentation amplifier **414**, programmable Schmitt triggers **416** and **418**, and two synchronous one-shot circuits **420** and **422**, one for generating a spike on spikeOut **424** and one for generating a spert on spertOut **426**.

[0107] Current from either a trunk or "L" from a bifurcated transistor **100** of **350** enters resistor **406** via I_top **404**. The current then flows through resistor **406** and exits as I_botm **407**. This I_botm **407** current continues on and enters the bottom half of the system, where the information it carries is eventually re-folded back into the vacuum state.

[0108] As can be seen from circuit **400**, if the difference in potential between I_top **404** and I_botm **407** presented by amplifier **414** to its output as Vperturb **415**, is greater than the lower trigger point reference voltage **410**, then Schmitt trigger **418** will go to logic 1 and present itself as signal spert **419**, indicating the lower trigger point **408** has been reached. Spert signal **419** is gated with a periodic, active high, sync pulse that is synchronous with the system clock, CLK **412**, such that when sync **402** is at a logic 1, the gated spert signal will a be a logic 0. Only when sync **402** is a logic 0 (i.e., no sync taking place) will spert **419** pass through to its respective on-shot circuit **422**. This periodic synchronization provides a frame of reference for the resulting spike/spert train generated by disclosed vacuum state information unfolding system. As a final step, the gated spert signal then enters a synchronous digital one-shot circuit **422** where a single pulse, one-clock in duration, is generated each time spert **419** transitions from a logic 0 to a logic 1 anytime sync **402** is not active, i.e., not at a logic 1 state, presenting itself as spertOut **426**.

[0109] SpikeOut **424** is generated exactly the same way as spertOut **426**, except its reference voltage, V_utp **408**, will usually be somewhat greater than the lower trigger point V_ltp **410**. If Vperturb **415** is greater than V_utp **408**, then Schmitt trigger **416** output, spike **417**, will go active high, but only if there is no sync **402** cycle during that time. If synchronous one-shot circuit **420** detects that spike **417** is active high, it will produce an active high pulse on its output and present it as spikeOut **424**.

[0110] At this point it should be understood that the current entering and exiting I_top **404** and I_botm **407** (respectively) can be swapped, such that current enters via I_botm **407** and exits via I_top **404**. This optional feature is intended mainly to provide a means to essentially "flush" the system periodically if desired or needed. With this particular circuit **400**, if the input current comes in from I_botm **407** instead of I_top **404**, the polarity of amplifier **414** output will be inverted, and, consequently will prevent the Schmitt triggers from triggering properly. Thus, a flush should only be performed when sync is active high. One way to make **400** truly bidirectional is to employ instrumentation amplifiers whose output is the |absolute value| of the difference input.

[0111] FIG. **5** is a diagram of the bottom half of the a vacuum state information re-folder built from a carbon nanotorus and five conscious-gate transistors with their inputs flipped in relation to their corresponding conscious-gate transistors in the top portion of the vacuum state information unfolder. FIG. **5** shows the bottom half **500** of the vacuum state information unfolder **300**. One of its functions is to re-fold the information that was unfolded by the upper half **350**. Another function is to act as a potentiality ballast or gimbal from the perspective of the electrons flowing through it, in that as they pass through the network, they all make at least one pass through a bifurcated transistor's "L". Otherwise, some electrons flowing through it will pass through only the trunk and never an "L". The bottom half includes a psyclotron traffic circle **200** similar to the one in the upper half, except, in this instance, the dendrite "L"s are inputs instead of outputs. The bottom half also includes the same number of psychotronically steerable bifurcated transistors **100** as the upper half. Current coming out of resistor **406** of the spiker circuit **400** enters the lower half via bus **510**.

[0112] Note that current exiting the trunk from the upper half always enters an "L" in the lower half and current exiting an "L" in the upper half always enters a trunk in the lower half. It should also be noted that current in the psyclotron traffic circle of the upper half flows in one direction while the current in the psyclotron of the lower half flows in the opposite direction.

[0113] FIG. **6** is a diagram of the vacuum state information unfolder showing the relationship between the upper half unfolder and the bottom half re-folder and spike generators. FIG. **6** shows how to nest multiple 10-bit vacuum state information unfolders to create a 50-bit vacuum state information unfolder **600**, which provides fifty spike bits and fifty spert bits. With this approach, there is only one entrance point and only one exit point through which current enters and exits the network.

[0114] FIG. **7** is a diagram of a different version of a vacuum state information unfolder that uses a gradual charge shedding method of information extraction. FIG. **7** is a slightly different kind of vacuum state information unfolder referred to as an information sifter **700**. There is one point through which current enters the system at V_A of psyclotron **200**. However, unlike the information unfolder of FIG. **6**, the information sifter of FIG. **7** has multiple current exit points. This approach is suitable for certain applications. It has the advantage of being more simplistic and cheaper to manufacture, calibrate, and test. While it may appear that most of the current that enters the system will go directly to the V_Z terminal, it is important to consider the fact that the nanotubes will eventually saturate, limiting the amount of current that passes through them. Note that the "L" junction is located about 25 percent of the way up the length of the trunk. Consequently, while the trunk is in saturation mode, self-limiting the amount of current that flows through its

entire length, a certain percentage of the current will have an opportunity to carry out its programming by going down the "L", which has more conductance because it is not yet saturated.

[0115] FIG. **8** is a diagram of a vacuum state information unfolder/re-folder with 64-bit spike train output (32 bits of which are spikes and the other 32 bits sperts) showing the relationship between an upper unfolder portion to a lower re-folder portion, both comprising bifurcated conscious-gate carbon nanotube transistors, all metallic in this instance, and having bidirectional unfolding/re-folding ability. The information unfolder circuit **800** comprises an upper half **820** and a lower half **870** of a 32-bit information unfolder, having a single current input **810** and a single current output **860** into and out of the system. Like the information unfolder of FIG. **6**, the input **810** and output **860** can be swapped such that input **810** then becomes an output and output **860** becomes an input and circuit **820** becomes the lower half and circuit **870** becomes the upper half. Circuits **820** and **870** each comprise thirty-two psychotronically steerable bifurcated conscious-gate carbon nanotube transistors **100**, in this instance, all metallic. The transistors **100** may be decorated with ssDNA, RNA (folded or unfolded), enzymes, proteins, and/or nanoparticles, and may be intentionally modified to have defects.

[0116] Moreover, the carbon used to synthesize the CNTs incorporated into the information unfolder circuit **800** may have been extracted from a specific percipient's blood/body tissues, so as to take advantage of quantum entanglement phenomena. This way, the information unfolder **800** and donor percipient have a more "natural," symbiotic relationship and thus **800** is more likely to perform at its peak and without the percipient having to exert as much volitional psychotronic energy at the information unfolder **800** to get it to yield the information being sought by the donor percipient, close relative, or member of the same genome.

[0117] Similar to the information unfolder of FIG. **6**, the current **404** coming out of a trunk or "L" of the transistors **100** of the upper half **820** that directly interface to the spikers **840** where a spikeOut **830** or spertOut **850** may or may not be generated during a given clock cycle, passes through that spiker's series resistor **406** of FIG. **4** and this current **407** continues to the bottom half **870** by entering a trunk or "L" of a transistor **100** interfacing to the spiker output.

[0118] As can be seen from the information unfolder circuit **800**, current enters a V_A **810** where it is continually split according to the instructions it is carrying and eventually winds up "binning-out" at the one or more spikers prescribed in the instructions programmed into it by way of psychotronic perturbation, ssDNA, or RNA, according to the percipient's intention/volition. If enough electrons bin-out at their corresponding spiker circuit, a spikeOut pulse will be generated for that specific bin. A spikeOut pulse **830** will always have a corresponding spertOut pulse **850** that occurs either prior to or simultaneously with the spikeOut during a synchronized frame. If a spiker does not produce a spertOut pulse throughout a synchronized frame, this means another spiker in the information unfolder circuit **800** is depriving it of its share of current. In a dead universe, all (or almost all) spikers of the information unfolder circuit **800** will produce one spertOut pulse and no spikeOut pulse every synchronized frame. The only way for spikeOut to be produced is for some conscious entity to direct a volition at it commanding the information unfolder circuit **800** to respond by yielding information from the vacuum state. In this manner, information from the vacuum state is said to be unfolded, in that the binning-out process yields meaning either directly or with the aid of adequately trained artificial neural networks.

[0119] Once the current **407** exits the spiker circuit, it enters the lower half **870** by entering the trunk or "L" of bifurcated transistor **100**. It then begins the unfolding process in reverse—re-folding. Eventually the current (and information it carries) is completely re-folded back into the vacuum state by the time it exits at V_Z **860**.

[0120] Similar to the previously described 10-bit vacuum state information unfolder **600** of FIG. **6**, the transistors **100** of the information unfolder circuit **800** are oriented such that the current flowing through the upper half sees the same number of trunks and "L"s when it flows through the lower half. This symmetry creates something similar to buoyancy or ballast/balance across the entire network. When psychotronically perturbed with a volition directed at the information unfolder circuit **800**, it can also function as a quantum gimbal.

[0121] FIG. **9** is a diagram of a bidirectional vacuum state information unfolder/re-folder with 512-bit spike train output (256 bits of which are spikes and the other 256 bits sperts) built from eight unfolder/re-folders of FIG. **8** and two carbon nanotorus conscious-gate psyclotrons (the second psyclotron is not visible in this diagram because it is underneath the one shown). FIG. **9** shows a 256-bit psychotronic vacuum state information unfolder **900** comprising eight 32-bit psychotronic vacuum state information folders **800** and two eight-dendrite versions of the psyclotron **200**, one for the eight upper halves of the information unfolder circuit **800** and one for the eight lower halves of the information unfolder circuit **800**, which may be decorated with a percipient's ssDNA or RNA **950**. Current enters the axion **910** of the psyclotron **200** and enters the traffic circle of persistent currents, receiving directions/instructions from the ssDNA and information from the vacuum state existing at the interior of the psyclotron **200**. Then the current exits at the prescribed psyclotron dendrite and enters the upper half V_A **920** and begins the information unfolding and re-folding process, eventually producing synchronized spike trains spikeOut **930** and spertOut **940**, which may be in human-readable form (ASCII alpha-numeric characters and/or decimal character sequences) or may eventually be submitted to an artificial spiking neural network for processing by a conventional computer for further processing and storage.

[0122] The current then exits the spiker circuit of the information unfolder circuit **800** and begins the information re-folding process until it exits via V_Z **860** and then enters the corresponding dendrite of bottom half psyclotron **200** (not shown) and eventually exits the bottom half psyclotron via its axion "L" **212**.

[0123] FIG. **10** is a diagram of an alternative to the bifurcated carbon nanotube conscious-gate transistor, this one being built from two strips of graphene with optional DNA decoration and which might be substituted for use in the bidirectional vacuum state information unfolder/re-folder of FIG. **9**. FIG. **10** shows a bifurcated conscious-gate transistor **1000** constructed, for example, from a flat strip of graphine **1020** rather than two carbon nanotubes of transistor **100**, in an alternative embodiment of the conscious-gate transistor **100**. A single carbon nanotube may also be sub-

stituted for the single flat strip of graphine **1020**, which can optionally be decorated with ssDNA, RNA (folded or unfolded), enzymes, proteins, and/or nanoparticles, and/or modified to have defects, including by way of crumpling.

[0124] Current enters by way of the V_A terminal **1050** and can turn north and/or south, across graphine strip **1020** until reaching respective contacts **1015** and/or **1040** and exiting via their respective Inorth **1010** and/or Isouth **1030** terminals. If graphine strip **1020** is metallic (i.e., "armchair"), then no field (backgate) **1065** is required. If graphine strip **1020** is semiconducting (i.e., zigzag), then a field/backgate is required, the field potential of the back-gate being applied at VG terminal **1060**.

[0125] This alternative embodiment of transistor **100** is presented because the technology for synthesizing carbon nanotubes to have a desired diameter and chiralty (i.e., metallic or semiconducting), sorting and assembling them, etc., is still in its infancy.

[0126] While transistor **1000** has the advantage of being easier to manufacture and embed within a substrate, it does not appear to have direct access to the information within the vacuum state as is the case with transistor **100**. The closest approach to that would be to substitute a single carbon nanotube for graphine strip **1020**, but even then, there is still no direct access to the vacuum state absent modification of the carbon nanotube by incorporation of voids/defects into it by way of e-beam or ozone modification.

[0127] Because transistor **1000** would most likely be susceptible to psychotronic perturbation, especially if decorated with a percipient's ssDNA or RNA, it is expected that transistor **1000** could be used for such applications as psychotronically steerable directional control input devices and flipping on LEDs and such, but it does not appear that it would work as well when used for "natural knowing" kinds applications when substituted for transistor **100** in vacuum state information unfolder **800**, for example. With that said, transistor **1000** can be directly substituted for transistor **100** in vacuum state information unfolder **800**. After doing so, at a very minimum, one may wind up with a psychotronically perturbable directional control device that a percipient with at least some ability can employ to remotely control machines with only his or her volition.

[0128] FIG. **11** is a diagram of another alternative to the bifurcated carbon nanotube conscious-gate transistor, this one being built from a light-emitting diode (LED) and two bi-polar junction transistor (BJT) photo-transistors optionally decorated with DNA through which photons emitted by the LED penetrate, impacting the photo-sensitive base of the BJTs. FIG. **11** is another alternative embodiment of transistor **100**, for the same reasons as transistor **1000**. A dual photo-transistor **1100** includes a built-in LED **1120** as a photon source, which includes its own constant current source **1150**, such that with a sufficient potential supplied at its V_{led} terminal **1190**, it emits a constant stream of photons, which penetrate and pass through the ssDNA or RNA decorating the bases of photo-transistor **1180** and matching photo-transistor **1130**.

[0129] As the light passes through the percipient's ssDNA or RNA, instructions/information contained in the dsDNA, ssDNA or RNA (folded or unfolded) are imposed on the photons before impacting the base of transistors **1180** and **1130**, such that when the photons knock electrons loose in these bases, the information/instructions are transferred to the electrons before being emitted through transistors **1180** and **1130** and their respective emitters **1170** and **1140** of photo-transistors **1180** and **1130**, such that the electrons will follow the instructions thereby imposed on them as they traverse the maze of pathways to their respective prescribed destinations. To employ transistor **1100** as a substitute for transistor **100** in a circuit such as that of the upper half **820** of vacuum state information unfolder circuit **800**, collector terminals **1110** of transistor **1100** must be tied together and the respective emitter terminals **1170** and **1140** must be separated. To employ transistor **1100** as a substitute for transistor **100** in a circuit such as that of the lower half **870** of vacuum state information unfolder circuit **800**, collector terminals **1110** of transistor **1100** must be separated and the respective emitter terminals **1170** and **1140** must be tied together.

[0130] Like transistor **1000**, while transistor **1100** would be susceptible to psychotronic perturbation, it does not appear that it would have direct access to the infinite information folded up in the vacuum state as in the case of transistor **100**. As such, it is expected that transistor **1100** may nonetheless be used for such applications as psychoenergetically steerable directional control input devices and flipping on LEDs, but it does not appear that it could be used for "natural knowing" kinds applications when substituted for transistor **100** in vacuum state information unfolder **800**, for example. Fortunately, in this respect, transistor **1100** can be directly substituted for transistor **100** in vacuum state information unfolder **800**. After doing so, at a very minimum, one may wind up with a psychoenergetically perturbable directional control device that a percipient with at least some ability can employ to remotely control machines with only his or her volition.

[0131] FIG. **12** is a diagram of a unidirectional alternative to the 512-bit, bidirectional vacuum state information unfolder/re-folder of FIG. **9**, but which employs the bifurcated conscious BJT of FIG. **11**. FIG. **12** is a diagram of a circuit **1200** showing what the circuit of **800** would look like with its transistor **100** substituted with dual photo-transistor **1100**. Note that because the photo-transistors of **1100** are based on silicon BJT-type photo-transistors, current can only flow in one direction, unlike circuit **800** populated with transistor **100**.

[0132] FIG. **13***a* is a 3D model/rendering of a silicon substrate fabricated as a jig for assembling a bifurcated conscious-gate transistor and which also shows an optional reference character/symbol which might be used as an address or coordinate specifier. FIG. **13***a* is a computer-generated 3D model **1300** showing silicon substrate **115** with combination contact and pads for transistor **100** (FIG. **1***a*), V_{psi} **140**, V_Z **150**, V_L **170**, V_{GA} **160**, and V_A **130**. Also shown is a jig etched into substrate **115**, which is used to assemble transistor **100**. The jig includes a trench **109** for the trunk to lay in and a trench **165** for the "L" to lay in. Trench **109** is etched deep enough and wide enough so that the center axis of the trunk is flush with the surface of the substrate **115**. Trench **165** is etched deep enough and wide enough such that the center axis of the "L" is flush with the surface of the substrate **115**. Ideally, there should be just a little excess width of both **109** and **165** to make it easier to manipulate the carbon nanotubes into them after depositing them onto the substrate **115**. For semiconducting "L"s, a back-gate (or side-gate) **160** is necessary, which can be applied utilizing an ion-beam.

[0133] Additionally, a symbol or character **105** is either etched or added to the substrate. In some applications, this symbol can be employed as a sort of psychic marker, making a specific device easier to find or home in on by electrons.

[0134] Finally, note the angle or aspect ratio of the "L" trench **165** in relation to trunk trench **109**. In this instance, it is angled 30 degrees from perpendicular to trunk trench **109**. One reason for this is because it is desired to actually penetrate the trunk **110** such that the entire tip of "L" **120** resides internal to trunk **110**. Coming in at an angle makes one side of the tip of "L" more like a sharp scoop rather than a blunt end of a telephone pole, as would be the case if it was attempted to penetrate perpendicular to the trunk.

[0135] Another reason for penetrating at this 30 degrees from perpendicular angle, is that it is desirable to have an electron scooper/flange inside the trunk. This is because electron flow through the CNT is ballistic (depending on current density) and, as such, they would have a tendency to fly right by the "L" exit, absent a scooper or on-ramp to exit onto.

[0136] FIG. **13***b* is the 3D model/rendering of FIG. **13***a* showing how the substrate is employed as a jig, but with a "trunk" carbon nanotube laid in place as a first step in the assembly process. FIG. **13***b* is a computer-generated 3D model showing trunk **110** after manipulation using either an AFM or DEP so that it is positioned inside its respective trench **109** as a first step in the assembly process.

[0137] FIG. **13***c* is the 3D model/rendering of FIG. **13***b*, zoomed-in over the location where, using the e-beam of a Transmission Electron Microscope (TEM), the trunk carbon nanotube is modified to accept insertion of one end of a smaller diameter carbon nanotube or DNA strand to form the "L" of the bifurcated conscious-gate transistor and also showing the etched jig trenches where the carbon nanotubes and/or DNA strand will eventually rest. FIG. **13***c* is a computer-generated 3D model showing an overhead view of trunk **110** and an orifice **112** created with a Transmission Electron Microscope (TEM) e-beam at the intersection of the trunk trench **109** and "L" trench **165** as a second assembly step. Vpsi tap contact **140** is optional.

[0138] FIG. **13***d* is similar to FIG. **13***c*, but viewed from a different angle to show the orifice created in the side of the trunk carbon nanotube where the "L" will be inserted during assembly.

[0139] FIG. **13***e* is similar to FIG. **13***b*, except showing both the trunk carbon nanotube and the "L" carbon nanotube laid in place and positioned within their respective trenches of the assembly jig in the silicon substrate. FIG. **13***e* is a computer-generated 3D model showing a view of trunk **110** and an orifice **112** created with a TEM e-beam at the intersection of the trunk trench **109** and "L" trench **165** as a second step. Also shown is the "L" CNT **120** after being manipulated and positioned into its respective trench as a third step in the assembly process.

[0140] FIG. **13***f* is a 3D rendering showing a trunk metallic carbon nanotube resting in its assembly trench and the "L" semiconducting carbon nanotube resting in its assembly trench, both in position immediately prior to the business end of the "L" being inserted into the orifice of the trunk created by a TEM e-beam. FIG. **13***f* is similar to FIG. **13***e*, except from a much closer perspective. Note that at this point, trunk **110** has not yet been penetrated by "L" **120**. Here, it can be seen how the jig etched into the substrate can be used to properly align the two components to facilitate complete penetration.

[0141] FIG. **13***g* is similar to FIG. **13***f*, except showing the conscious junction forming the conscious-gate transistor after insertion of the "L" into the trunk. FIG. **13***g* is similar to FIG. **13***f*, except as the fourth step in the assembly process, the "L" **120** has been made to completely penetrate the trunk **110** via orifice **112**, wherein its respective trench **165** is employed as a skid or chute and such manipulation being done with an AFM or HEP to slide "L" **120** into the trunk orifice **112** so that the tip of "L" **120** penetrates the orifice **112** so that the tip is completely inside trunk **110**.

[0142] FIG. **13***h* is similar to FIG. **13***g*, except viewed from a different perspective.

[0143] At this point, as an optional fifth step in the assembly process, top contacts may be deposited on top of each bottom contact described previously. Ideally, the contacts should be symmetric, meaning that all contacts are made of the same material.

[0144] FIG. **13***i* is similar to FIG. **13***f*, except viewed from a wider perspective and also showing the "L" carbon nanotube after being decorated with dsDNA or ssDNA. FIG. **13***i* shows optional decoration of "L" **120** with ssDNA **419** as an optional sixth step in the assembly process. To hold the entire assembly in place, vapor deposition similar to a non-reactive epoxy may be utilized, especially if the deposition could be achieved at a relatively low temperature for vapor deposition. This would avoid possible chemical reactions and, consequently, undesired modification of the electrical properties of the components.

[0145] FIG. **13***j* is similar to FIG. **13***i*, except with a view down the interior of the trunk carbon nanotube **110**. Note the electron "scooper"/exit ramp formed by the tip of "L"**120**. As can be seen from this perspective, it is likely that not all electrons in the left or center lane of traffic are going to be successful at getting onto the exit ramp and will either tunnel through, giving up energy, and/or cause a carbon atom there to emit a photon as a result of a head-on collision with subject electron. Electrons in the far right, top, and bottom lanes will most likely quietly pass right on by the exit ramp, unless they are carrying instructions to do otherwise. In other words, the scooper used as an exit ramp helps the electrons carry out their instructions.

[0146] FIG. **13***k* is similar to FIG. **13***i*, except viewed from a wider perspective.

[0147] FIG. **13***l* is similar to FIG. **13***i*, except it is showing single-stranded DNA alone being employed as the "L", the ssDNA optionally being impregnated with silver and/or nickel nanoparticles. FIG. **13***l* is similar to FIG. **13***h*, except that, to form the "L" **120** of transistor **100**, a segment of ssDNA **419** has been substituted for the carbon nanotube. The ssDNA **419** forming "L" **120** can be stand-alone or can be impregnated with, for example, silver and/or nickel nanoparticles.

[0148] FIG. **13***m* is similar to FIG. **13***l*, except viewed from a wider perspective.

[0149] FIG. **14***a* is a 3D model/rendering showing the trenches forming an assembly jig etched into a silicon substrate to ultimately be used to form an artificial conscious-gate multiplexer/neuron ("psyclotron") built from a carbon nanotorus and carbon nanotubes. FIG. **14***a* illustrates a computer-generated 3D model **1400** showing silicon substrate **1410** with a jig for assembling an eight-dendrite

psyclotron etched into the substrate in the same manner as for transistor **100** substrate **1300** (FIG. **13***a*). In this embodiment, there are nine "L" trenches **1430** (one for each dendrite "L" and one axion "L") where the "L"s will rest and one ring trench **1420** where the carbon nanotorus will rest. Substrate **1410** also includes a combination contact/pad **1440** and gate/field pad **1450** for all nine corresponding gate/fields **1460**. If the "L" CNTs are all metallic, the gate/field pad **1450** and the corresponding gate/fields **1460** are not necessary. Likewise, if the carbon nanotorus to be used is semiconducting rather than metallic, a back or side-gate and corresponding pad must be added.

[0150] FIG. **14***b* is similar to FIG. **14***a*, except also showing the psyclotron's carbon nanotorus resting in its trench and subsequently modified by a TEM e-beam to create the orifices the "L" carbon nanotubes or DNA wires will be inserted into during assembly.

[0151] FIG. **14***c* is similar to **14***b*, except showing the "L" carbon nanotubes after insertion into their respective orifices. FIG. **14***b* is a closer-in perspective of FIG. **14***a* showing a metallic nanotorus **1425** after being positioned into its jig trench **1420** as a first step in the psyclotron assembly process. Also shown are the orifices **1427** created by e-beam in the side-wall of **1425** at each "L"-nanotorus trench intersection of substrate **1410**.

[0152] FIG. **14***c* is similar to **14***b*, except showing the "L" carbon nanotubes after insertion into their respective orifices. FIG. **14***c* shows the "L" CNTs **1435** after being manipulated into their respective jig trenches and subsequently coaxed by way of AFM or DEP to completely penetrate, via their respective orifices **1427**, the nanotorus **1425** side-wall. Also shown are the respective optional side-gates **1460**, which, in this instance, indicate that the "L" CNTs are semiconducting.

[0153] FIG. **14***d* is similar to FIG. **14***c*, except showing the psyclotron after being decorated with single-strand DNA. FIG. **14***d* is a top view of carbon nanotorus **1425** after optional decoration with ssDNA segment **1470**.

[0154] FIG. **14***e* is similar to FIG. **14***d*, except from an overhead view showing the aspect angles of the "L" dendrite nanotubes in relation to the aspect angle of the "L" axion nanotube and also showing current flow direction when the "L" dendrites are functioning as inputs, with the "L" axion functioning as an output or vice-versa. Also shown is a circular arrow showing intended direction of current flow **1472**. "L" **1440** is the axion, while the other "L"s are dendrites. Side-gate **1460** is the side-gate for axion CNT **1440**, indicating that axion **1440** is semiconducting. CNT "L" **1435** is a dendrite with corresponding side-gate **1460**. Note that if current circulating as shown decides to exit, most will have to tunnel through the back side of the "scooper", similar to trying to get onto a highway on-ramp going in the wrong direction. Also note that all the "L"s are canted in the same direction 30 degrees from perpendicular of the nanotorus **1425** sidewall. In this configuration, some energy will be lost due to tunneling through the back side of the scooper and/or emission of photons from such collisions. Also note that with both dendrite "L"s and axion "L"s canted the same direction, there's really no way to tell which are inputs and which are supposed to be outputs.

[0155] FIG. **14***f* is similar to FIG. **14***e*, except showing the "L" axion carbon nanotube at a higher position and a different aspect angle. FIG. **14***f* shows the axion "L" **1480** and its respective side-gate **1485** canted thirty degrees off perpendicular in the opposite direction of the dendrite "L"s. As such, with respect to indicated current flow direction **1472**, it can be seen that in this configuration, the dendrite "L"s **1435** are inputs and axion "L" **1480** is functioning as an output.

[0156] FIG. **14***g* is similar to FIG. **14***f*, except showing the "L" axion carbon nanotube at a middle position and being used as an input and the other "L" carbon nanotubes being employed as outputs as indicated by the circular arrow showing current flow direction, thereby forming a conscious-gate multiplexer/psyclotron. FIG. **14***g* shows axion "L" **1480** and its respective side-gate **1485** are positioned more equidistant between the dendrite "L"s **1435**. From the current flow direction indicator, it can be surmised that, at this instant, the dendrite "L"s are functioning as outputs and the axion "L" **1480** is functioning as an input, indicating that psyclotron **1400** can function bidirectionally.

[0157] FIG. **15** is a computer rendering of a proposed carrier for mounting the conscious-gate transistor onto either before, after, or during assembly of the actual conscious-gate transistor onto its substrate/jig to form a functioning, surface-mount, "ThoughtChip" **1500**, which can then be used in a conscious system/machine. A single bifurcated conscious-gate transistor die **1300**, assembled or unassembled, can be mounted on the novel ThoughtChip surface-mountable chip carrier **1510**. The purpose of the chip carrier is to provide something larger than a single substrate die **1300** that can be handled by humans and/or robots during the manufacturing process. For example, the chip carrier may be on the order of at least 5.0 mm on a side **1530**. For a single transistor, most of the substrate would not be used, except for providing a work surface on which to place, sort, and manipulate the carbon nanotubes and nanotoroids used to form the transistor. Note the up-pointing arrow **1520** etched into the surface of the chip carrier **1510**. It is used essentially for the same reasons as symbol **105** of transistor **1300**, except instead of being a psychotronic address, it is for providing psychotronic vector/direction reference. It is also used during the assembly process as a reference for properly orienting the chip carrier onto a circuit board prior to permanent mounting.

[0158] FIG. **16** is computer rendering of a proposed surface-mount "ThoughtPad" multi-chip carrier comprising an array of ThoughtChips mounted on its surface. The novel ThoughtPad **1600** includes multiple, radially arranged ThoughtChips **1500** mounted on a printed circuit board (PCB) **1620**. Like the ThoughtChip **1500**, it also has an arrow **1610** etched into its surface for the same reasons. This particular version's PCB **1620** is also surface mountable, wherein it has enough semi-circular pads **1630** to bring out all the required signals from each ThoughtChip and make them accessible to the circuit board on which it is mounted. Additionally, each of the ThoughtChips **1500** is labeled with a unique symbol **1640** for the same reasons that the substrate **115** of transistor **1300** has a symbol **105**. In this example, the symbols comprise the first **25** letters of the English alphabet, capitalized.

[0159] At first glance, it would seem this arrangement would only support psychotronic control of a target machine, by way of direction and magnitude on just the X and Y axis. However, it may be possible to train an artificial neural network in an aircraft to pitch up, for example, if ThoughtChips labeled "U," "V," and "W" are simultaneously perturbed as a group, pitch down if ThoughtChips

labeled "Y," "R," and "S" are simultaneously perturbed as a group, bank left if ThoughtChips labeled "W," "X," and "Y" are simultaneously perturbed as a group, and bank right if ThoughtChips labeled "S," "T," and "U" are simultaneously perturbed as a group, such that only these extreme outer ThoughtChips, when perturbed collectively as a specified group, have an effect on pitch and roll, while the others affect only yaw control, for example.

[0160] FIG. **17** is a computer rendering of a proposed "ThoughtStack" comprising multiple ThoughtPads to form a multidimensional thought input device for artificial neural networks and conscious machines. The novel ThoughtStack **1700** includes multiple ThoughtPads **1600** stacked on top of each other to form a stack, such that there is a top ThoughtPad **1710**, a middle ThoughtPad **1720**, and a bottom ThoughtPad **1730**. In this manner, a percipient has a means to impose a volition to move in 3D space and at various magnitudes.

[0161] FIG. **18** is a graphic **1800** showing how a percipient directs his thoughts and volition to "steer" the output of a ThoughtPad to produce a spike or spike train in the "K" direction, which can be used to train a spiking artificial neural network. The graphic shows how a percipient **1820** might impose his volition on ThoughtPad **1600** to cause a machine to move in the "K" direction relative to its current inertial direction. He does this by imagining in his mind **1810** arrow **1610** moving to the right so as to superimpose it onto symbol "K" **1640**. Ideally, during training and/or operationally, percipient should have some real-time audio, visual, and/or tactile feedback so that he can make corrections as necessary.

[0162] FIG. **19** is an exemplary timing diagram showing the relationship between a system clock, sync signal, and exemplary outputs (both analog and digital) of a ThoughtPad in response to the percipient of FIG. **18** imposing a volition upon the ThoughtPad to steer in the "K" direction. This timing diagram shows an exemplary timing relationship between various signals produced by the logic of spiker circuit **400** in response to psychotronic stimulus provided by percipient **1820** when imposing his volition upon ThoughtPad **1600** to cause a target machine to change course. The system clock CLK **412** is a free-running clock. Sync **402** synchronizes the capture of data so as to create a data frame (or spike train) **16** clocks deep, every 16 clocks in this instance. From sync **402**, it can be seen that the sync pules are spaced 16 clocks apart, although different implementations may have fewer or more clocks, depending on the requirements of a given implementation.

[0163] Each instrumentation amplifier **414** (See FIG. **4**) produces a buffered and amplified analog $V_{perturb}$ signal **415** reflecting the amount of current passing through its series resistor **406** (FIG. **4**). If the amount of current changes, this change will be reflected in the output **415** of that amplifier **414**. In the example timing diagram of FIG. **19** and FIG. **4**, it can be seen that the output of the amplifier associated with the transistor labeled "B" exceeds the spert Schmitt trigger threshold voltage **410**, which results in the spert pulse on the output **419** of "B's" spert Schmitt trigger, which in turn goes through a synchronous one-shot circuit **422** to produce a single spert pulse exactly one clock cycle in duration and will not fire again until the next sync pulse comes along.

[0164] As can be seen from the timing diagram, the Vperturb amplifier outputs associated with ThoughtChips labeled "I", "D", and "E" never reach the pre-programmed spert Schmitt trigger threshold **410**. As a result, a spert pulse is not generated for those particular ThoughtChips during this frame/spike train. If a given ThoughtChip does not spert during a given frame, a spike will not be produced for that ThoughtChip.

[0165] Again referring to the timing diagram of FIG. **19** and to FIG. **4**, notice that although "B's" output level does reach its spert Schmitt trigger threshold **410**, it nonetheless does not generate a spike **417** on its respective spike output. This is because there is not enough current flowing through its respective instrumentation amplifier's series resistor **406** to yield a voltage high enough to trigger its respective "spike" Schmitt trigger **416**.

[0166] As can be seen from the timing diagram, when percipient **1820** directs his volition at the ThoughtPad to move in the direction of labeled "K", current is psychotronically diverted away from one or more other ThoughtChips so as to increase the current flowing through "K's" series resistor **406** sufficiently enough to produce a voltage level that exceeds its respective spike Schmitt trigger threshold level **408**.

[0167] In this instance, due to "K's" Vperturb **415** rise time, "K's" spert Schmitt trigger will fire **419** roughly one clock before its spike Schmitt trigger fires **417**. As with "B", once "K's" spert Schmitt trigger fires, the spert pulse will trigger a synchronous one-shot that produces a spertOut pulse **426** exactly one clock cycle in duration and will not fire again until after the next sync pulse **402** comes along. As can be seen from the timing diagram of FIG. **19**, "K" is the only ThoughtChip that produces a spikeOut pulse during this frame, while both "B" and "K" ThoughtChips produce a respective spertOut pulse **426** during this frame.

[0168] The symbol labeled **1910** indicates the Schmitt trigger has hysteresis, meaning the output will not switch back to zero until after the input drops substantially lower than the upper trigger point that originally caused the Schmitt trigger to fire. Hysteresis is a way of providing some noise immunity to help prevent false triggering on the down slope of the input.

[0169] In sum, percipient **1820** caused the production of a spike train comprising one spikeOut **424** and two spertOuts **426**. "B's" spertOut occurred on the second clock after sync **402** went high. "K's" spertOut occurred on the third clock after sync **402** went high, while its spikeOut went active on the fourth clock after sync went high. This forms a spike train that can be used to identify with particularity percipient's **1820** volition. This spike train can be used as is, or it can be run through an artificial spiking neural network and used to train a machine to correctly respond to percipient's **1820** volition.

[0170] FIG. **20** is an exemplary graphic showing a percipient imposing a volition upon a ThoughtPad or ThoughtChip to spike an "R" on its output, without any directional or magnitude component to the volition. This is essentially the same as a simple key press on a keyboard or keypad. This, of course, could be the first character of a text message or password, for example.

[0171] FIG. **21** is an exemplary graphic showing a percipient imposing a volition upon a ThoughtPad to simultaneously spike an "A, B, C, D, E, F, G, H, I" on its output, without any directional or magnitude component to the volition. The percipient directs his volition at ThoughtChips "A-I" simultaneously. Such an action may be utilized func-

tionally, for example, like pressing CNTL-ALT-DEL on a computer keyboard as a way to reboot a computer.

[0172] FIG. **22** is an exemplary timing diagram showing the relationship between a system clock and outputs, both analog and digital, of a ThoughtPad in response to the percipient of FIG. **21** imposing a volition upon the ThoughtPad to produce a spike train on its output that then can be fed into an artificial spiking neural network. FIG. **22** shows the effect the action depicted in FIG. **21** had on the ThoughtChips of the targeted ThoughtPad. Observe how all but two of the ThoughtChips produced a spikeOut and how the pulses are staggered. When this spike train **2210** is fed into a properly trained artificial spiking neural network, that network will be able to deduce that pressing buttons "A-I" is what percipient really meant, especially if "D" and "E" both produced a spertOut, which is also part of the spike train fed into the spiking neural network.

[0173] FIG. **23** is an exemplary graphic showing a percipient imposing a volition upon a ThoughtPad to produce a spike on the output of one of its ThoughtChips whose label/symbol corresponds to a single numeral associated with it by percipient. The emitted spike's symbol may correspond, for example, to the first digit of that evening's lottery number, such lottery number not having been drawn yet. This exemplary graphic illustrates just a few examples of things that can be done when a volition is directed at the ThoughtPad, wherein the percipient associates a symbol for something else. In this case, percipient is volitioning the ThoughtPad to spikeOut on ThoughtChip "A" if the first digit of that evening's winning lottery number is zero, or spikeOut on "B" if the first digit is one, and so on. Here, the percipient has no knowledge of the winning lottery number because the lottery drawing has not occurred yet. Instead, the percipient is relying on the fact that the ThoughtPad's ThoughtChips have direct access to the vacuum state, in that such information can be accessed and unfolded into information that can be output in human and/or machine-readable form.

[0174] FIG. **24** is an exemplary graphic showing how existing virtual assistants can be adapted to include a ThoughtPad or ThoughtStack so they can become responsive to a percipient's volition alone. In this example, the percipient is volitioning a first virtual assistant **2420**, adapted with a ThoughtPad **1700** internal to it, to call the percipient's wife and inform her that the percipient will be late for dinner. Next, the percipient directs his volition to a second virtual assistant **2410**, which also has a ThoughtPad installed internal to it, and volitions it to order two pizzas delivered to the percipient's house. It should be understood that the virtual assistants need not be in the same room or building as the percipient, in that the ThoughtPad, comprising at least in part the vacuum state information unfolder of **600** or **900**, for example, obtains its information and instructions from the vacuum state and possibly ssDNA of the percipient that decorates some or all of the psychlotrons and/or bifurcated transistors included in the ThoughtPad.

[0175] FIG. **25** is an exemplary graphic showing how weapon systems can be adapted to include a ThoughtPad or ThoughtStack so they can become responsive to a percipient's volition alone. The percipient may be remotely situated with respect to the weapon system, ThoughtPad/Stack, and/or physical war zone. In this example, a military pilot percipient is volitioning his aircraft to assess whether the potential hostile target appearing in his heads-up display (HUD) **2510** has manifested (or will manifest) hostile intentions and, if so, to shoot it down before the target carries out the hostile intention. It should be understood that the pilot percipient need not be physically located inside the cockpit of the aircraft/weapon system and may be located anywhere on or off planet in relation to the weapon system. In fact, the ThoughtPad that is having the pilot percipient's volition directed at it, need not be physically located within the percipient pilot's aircraft or even in the same room or building as pilot percipient.

[0176] HUD **2510** provides percipient with a valuable and useful feedback mechanism, not only for real-world operational missions, but also for training, in that such display, running simulations, can be used to train not only percipient pilots, but also artificial spiking neural networks processing spike trains supplied by a pilot percipient's ThoughtPad or ThoughtStack.

[0177] FIG. **26** is an exemplary graphic showing how the present invention can be incorporated into modern virtual assistants and employed to predict future stock market swings and make purchases accordingly to maximize profits of investors. In this example, percipient is volitioning the first virtual assistant **2420** to buy $100,000 in stocks that will yield the most profits (compared to all other stocks) after one year 2610. The percipient then directs his volition at the second virtual assistant **2410** to assist the first virtual assistant **2420** in carrying out the first volition. In this example, the percipient has no idea which stocks will yield the most profits after one year and is relying on the virtual assistants to make that determination. This is an example of how a percipient can get two virtual assistants to work together to carry out an ultimate volition, which is to make the most profit in the stock market **2610** after an initial investment of $100,000 and held for one year.

[0178] FIG. **27** is an exemplary diagram of an electrically-isolated, immortal vacuum state information unfolder **2700** that can be connected via opto-couplers to a computer, in that it includes a carbon-14 battery, which has an estimated half-life of 5,000 years. The unfolder **2700** includes a self-contained vacuum state information unfolder **2710** and a carbon-14 (radioactive diamond) battery **2720**. The exemplary self-contained vacuum state information unfolder **2710** includes either a vacuum state information unfolder **600** or **900** (for example) and a built-in clock and sync generator **2740**.

[0179] By optically isolating the outputs of unfolder **2710** using opto-coupler bridge **2730**, the unfolder is protected from accidental electrical damage while interfacing to different systems, which get older over time and must eventually be upgraded or replaced. Power for the output drivers (photo transistors) of the bridge **2730** may be supplied by an external source when connected to it. With the addition of the clock and sync generator circuit **2740** and carbon-14 battery, the vacuum state information unfolder **2700** is completely self-contained and will continue to run even when not connected to anything. Thus, the sync output of 2740 can be looked at as a heartbeat that will beat at a steady pace for about 5,000 years, which is roughly the half-life of carbon-14.

[0180] In the drawings and specification, there have been disclosed typical preferred embodiments of the disclosure and, although specific terms are employed, they are used in

a generic and descriptive sense only and not for purposes of limitation, the scope of the invention being set forth in the following claims.

1. A complex nanostructure, comprising:

a first nanostructure component having a first end, a second end, and an aperture in a side thereof;

a second nanostructure component having a first end and a second end, wherein the first end of the second nanostructure is inserted through the aperture in the first nanostructure, thereby forming a junction; and

voltage means for creating at least one difference in potential between the first end of the first nanostructure component and at least one of the second end of the first nanostructure component and the second end of the second nanostructure component, thereby enabling current to flow selectively through the second end of the first nanostructure or the second end of the second nanostructure.

2. The complex nanostructure as recited in claim **1**, wherein the complex nanostructure is a bifurcated nanostructure transistor, and wherein:

the first nanostructure component is a first linear carbon nanotube forming a nanostructure trunk;

the second nanostructure component is a second linear carbon nanotube forming a nanostructure L, wherein:

the first end of the nanostructure L is inserted through the side of the nanostructure trunk via the aperture, thereby forming the junction, and

the nanostructure L is angled away from the first end of the nanostructure trunk;

a first electrical contact at the first end of the nanostructure trunk;

a second electrical contact at the second end of the nanostructure trunk; and

a third electrical contact at the second end of the nanostructure L;

wherein whenever a voltage potential across two or more of the first, second, and third electrical contacts is present, current flows selectively from any of the electrical contacts having greater potential to any of the contacts having lesser potential, thereby providing a transistor effect.

3. The complex nanostructure as recited in claim **2**, wherein:

the first linear carbon nanotube is metallic;

the second linear carbon nanotube is semiconducting; and

a charge with field strength sufficient to allow current to flow extends along the second linear carbon nanotube.

4. The complex nanostructure as recited in claim **2**, wherein:

the first linear carbon nanotube is metallic; and

the second linear carbon nanotube is metallic.

5. The complex nanostructure as recited in claim **2**, wherein:

the first linear carbon nanotube is semiconducting;

the second linear carbon nanotube is metallic; and

a charge with field strength sufficient to allow current to flow extends along the first linear carbon nanotube.

6. The complex nanostructure as recited in claim **2**, wherein at least one of the first and second linear carbon nanotubes includes defects that alter electrical characteristics of the bifurcated nanostructure transistor.

7. The complex nanostructure as recited in claim **2**, wherein at least one of the first and second linear carbon nanotubes is decorated with a genetic material.

8. The complex nanostructure as recited in claim **2**, wherein:

the first and second linear carbon nanotubes are semiconducting and share a single field; and

the first linear carbon nanotube is decorated with a genetic material.

9. The complex nanostructure as recited in claim **2**, wherein:

the first linear carbon nanotube is decorated with a genetic material;

the first and second linear carbon nanotubes are semiconducting and share a first field extending from the first end of the first linear carbon nanotube to the junction of the first and second linear carbon nanotubes and from the junction to the second end of the second linear carbon nanotube; and

the first linear carbon nanotube has a second field extending from the junction of the first and second linear carbon nanotubes to the second end of the first linear carbon nanotube;

wherein when different potentials are applied to the first and second fields, the first linear carbon nanotube is made to function as a P-N junction diode.

10. The complex nanostructure as recited in claim **1**, wherein the complex nanostructure is a bifurcated nanostructure transistor, and wherein:

the first nanostructure component is a metallic linear carbon nanotube forming a nanostructure trunk;

the second nanostructure component is a genetic material functioning as a wire for a nanostructure L after being inserted into the metallic linear carbon nanotube trunk;

wherein the bifurcated nanostructure transistor further comprises:

a first electrical contact at the first end of the nanostructure trunk;

a second electrical contact at the second end of the nanostructure trunk; and

a third electrical contact at the second end of the nanostructure L;

wherein whenever a voltage potential across two or more of the first, second, and third electrical contacts is present, current flows selectively from any of the electrical contacts having greater potential to any of the contacts having lesser potential, thereby providing a transistor effect.

11. The complex nanostructure as recited in claim **10**, wherein the genetic material is impregnated with silver or nickel nanoparticles.

12-20. (canceled)

21. The complex nanostructure as recited in claim **2**, wherein:

the nanostructure L has a narrower diameter than the nanostructure trunk, and the first end of the nanostructure L is inserted through the side of the nanostructure trunk via the aperture into the interior of the nanostructure trunk at an angle away from the first end of the trunk;

wherein the nanostructure L forms an electron scooper within the interior of the trunk thereby providing an exit path for the electrons to exit the bifurcated nanostructure transistor through the nanostructure L.

22. The complex nanostructure as recited in claim **21**, wherein the first end of the nanostructure L extends into the interior of the nanostructure trunk such that a longitudinal center axis of the nanostructure L intersects a longitudinal center axis of the nanostructure trunk.

23. The complex nanostructure as recited in claim **21**, wherein the nanostructure L is angled toward the second end of the nanostructure trunk at an angle of 30 degrees past perpendicular from a longitudinal axis of the nanostructure trunk.

* * * * *