Conditional GIRAFFE: Representing Scenes As Compositional Generative Neural Feature Fields with Hair Conditions

NYCU 陽明交大

Chun-Yu Hou [1] Meng-Lin Tsai [1]

[1]National Yang Ming Chiao Tung University, Group 18

Abstract

Deep generative models allow for photorealistic image synthesis at high resolutions. But for many applications, this is not enough: content creation also needs to be controllable. While several recent works investigate how to disentangle underlying factors of variation in the data, most of them operate in 2D and hence ignore that our world is three-dimensional Niemeyer and Geiger 2021. In this project, we propose a conditional GAN base on GIRAFFE. The condition is encoded into latent dimension and concatenated with the sampled appearance latent code. We have tested on the celeba-hq dataset Lee et al. 2020 with hair color as condition. Brown and black hair can be successfully conditioned for the model trained on celeba-hq dataset. In addition, we have also tested on the Deepfashion dataset Liu et al. 2016 with different kinds of clothes as condition.

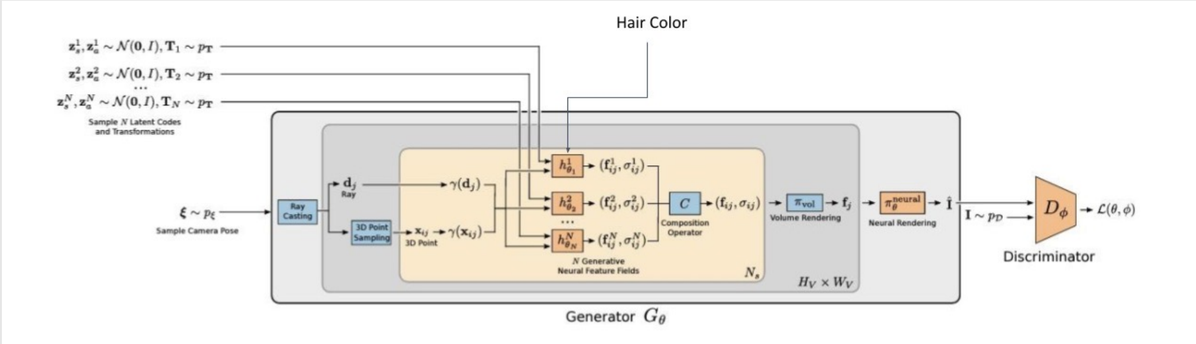

Figure 1. Overview of model

Related Work

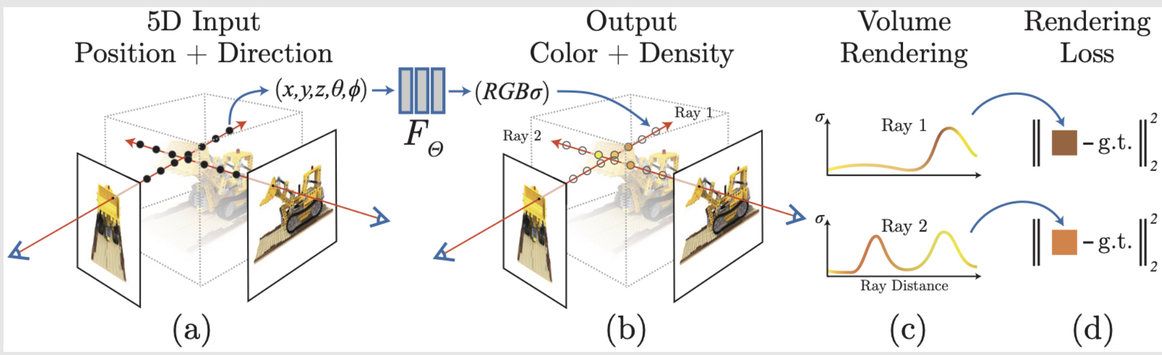

NERF Mildenhall et al. 2020 represents a scene using a fully-connected (non-convolutional) deep network, whose input is a single continuous 5D coordinate (spatial location (x, y, z) and viewing direction (θ, ϕ)) and whose output is the volume density and view-dependent emitted radiance at that spatial location.

GIRAFFE Niemeyer and Geiger 2021 represent scenes as compositional generative neural feature fields. For a randomly sampled camera, we volume render a feature image of the scene based on individual feature fields. A 2D neural rendering network converts the feature image into an RGB image. While training only on raw image collections, at test time we are able to control the image formation process wrt. camera pose, object poses, as well as the objects' shapes and appearances.

Method

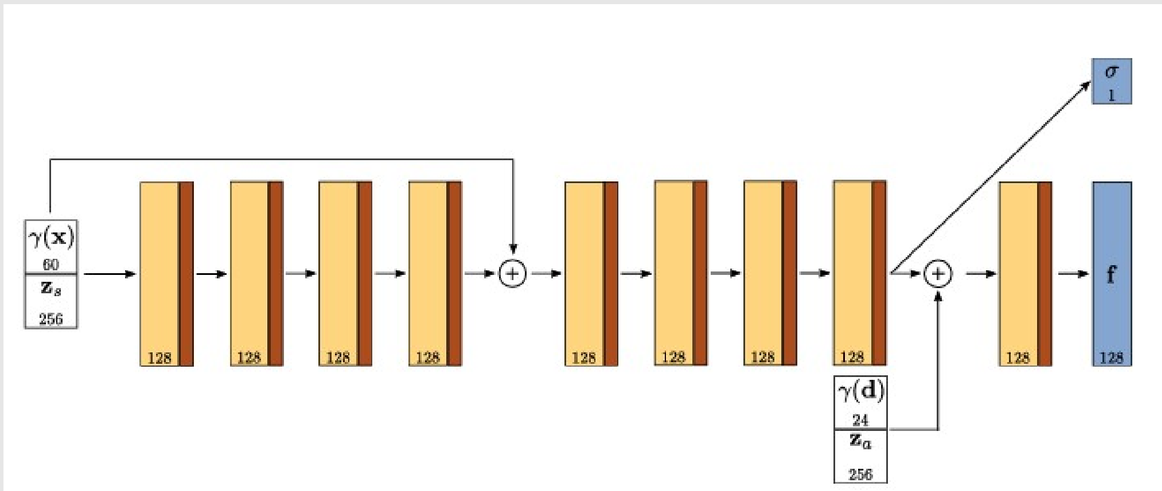

Figure 2. Object Feature Field

For the generator in celeba-hq dataset, we propose a method that can generate different hair color without changing the other face component. We embed the color condition into GIRAFFE's object feature field. First, we use a linear layer with LeakyReLU as activation function to span the one-hot label into higher dimensional space. Second, we concatenate the embedded condition with latent appearance code, since the hair color is related to appearance. In addition, hair condition in background feature field is randomly sampled.

For the generator in Deepfashion dataset, we directly perform an element-wise sum on embedded condition with shape and appearance latent codes, since different clothes have different shape and appearance.

For the discriminator in both two datasets, we embed condition into 2D shape feature with image size, then concatenate with input image.

Dataset

CelebFaces Attributes Dataset (CelebA) is a large-scale face attributes dataset with more than 200K celebrity images, each with 40 attribute annotations. The images in this dataset cover large pose variations and background clutter. CelebA has large diversities, large quantities, and rich annotations Lee et al. 2020. We utilize the annotation on different hair colors as our condition. On the other hand, we have trained our conditional GIRAFFE on Deepfashion dataset Liu et al. 2016. The dataset contains 52,712 in-shop clothes images with a clothing type annotation. However, the dataset is highly biased, where there is over 80 percent of pictures are of women. For dataset preprocessing, we discard the images containing only the bottom part of the person and pad the images with a white color border, which ensures only one background after resizing. Otherwise, the model can't represent the disconnected background pieces with only one background feature field.

Experiment and Result

Figure 3. Object rotation with different hair condition

Figure 4. Object rotation with different types of clothes

From the result above, the hair color have been successfully changed from black to brown color with different an angle and appearance. However, we can barely distinguish the first row (Sweatshirts hoodies) and the second row (Shirt Polos) clothes type, since the shape and appearance of clothes are much more complicated than hair color. The condition embedding method we use can't effectively handle such a diverse shape and appearance differences among 13 types of clothes, and even affect the original object rotation.

Conclusion

In this project, we propose a conditional GAN base on GIRAFFE and achieve changes in hair color without affecting the object's appearance. However, the condition embedded not only changes the hair color, but also affects the background. We consider this issue is derived from the background generator decoder is also embedded with the condition. Redesigning the architecture to have a unique decoder for background that makes background invariant to condition may solve this issue. In Deepfashion dataset, the half-body images are also included, drastically affect the body shape training in a bad way. On the other hand, the multi-angle images have different standing posture, this will also affect the training of object rotation. To sum up, a full-body, multi-angle with consistent standing posture dataset is much favorable for training our model.

References

- Niemeyer, M. and A. Geiger (2021). "GIRAFFE: Representing Scenes as Compositional Generative Neural Feature Fields". In: *Proc. IEEE Conf. on Computer Vision and Pattern Recognition (CVPR)*.
- Lee, C.-H., Z. Liu, L. Wu, and P. Luo (2020). "MaskGAN: Towards Diverse and Interactive Facial Image Manipulation". In: *IEEE Conference on Computer Vision and Pattern Recognition (CVPR)*.
- Mildenhall, B., P. P. Srinivasan, M. Tancik, J. T. Barron, R. Ramamoorthi, and R. Ng (2020). "NeRF: Representing Scenes as Neural Radiance Fields for View Synthesis". In: *ECCV*.
- Liu, Z., P. Luo, S. Qiu, X. Wang, and X. Tang (June 2016). "DeepFashion: Powering Robust Clothes Recognition and Retrieval with Rich Annotations". In: *Proceedings of IEEE Conference on Computer Vision and Pattern Recognition (CVPR)*.