EE2016-B- Fall 2021

數位系統導論

Fundamentals of Logic Design-Chapter 1: Introduction Number Systems and Convention

Prof. E Ray Hsieh 謝易叡 助理教授

我是謝易叡 (E Ray Hsieh)

- 交大電子博士畢 (2016畢)
- 交大電子博士後研究員(2017~2018)
- 史丹福大學電機系博士後研究員(2018~2020)

} 研發替代役

- 研究專長:
  - 矽奈米電晶體
  - 嵌入式記憶體
  - 高密度記憶體儲存
  - 記憶體內運算晶片設計
  - 嵌入式類神經網路晶片設計
  - 記憶體強化資訊安全設計

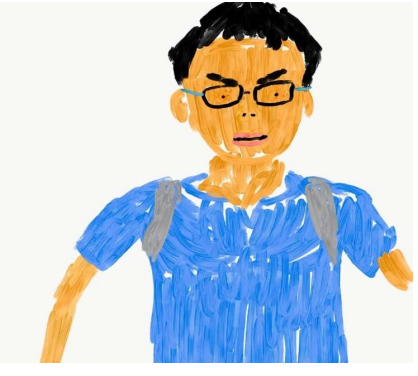

Couse Objectives

- **After studying this text, you should be able to apply switching theory to the solution of logic design problems.**
- You will learn both the basic theory of switching circuits and how to apply it.
- you will study Boolean algebra, which is the basic mathematical tool needed to analyze and synthesize an important class of switching circuits.
- Starting from a problem statement, you will learn to design circuits of logic gates that have a specified relationship between signals at the input and output terminals.

Couse Objectives

- Then you will study the logical properties of flip-flops, which serve as memory devices in sequential switching circuits.
- By combining flip-flops with circuits of logic gates, you will learn to design counters, adders, sequence detectors, and similar circuits.
- You will also study the **VHDL hardware description language**.
- Its application to the design of combinational logic, sequential logic, and simple digital systems.

Textbooks

- **"Fundamentals of Logic Design, Enhanced Edition, 7th Enhanced , "** 2021, by Charles H. Roth, Jr., Larry L. Kinney, Eugene B. John, Cengage Learning. (ISBN-13: 9781337620352)

- **Grading Policy:**
  - **2 mid terms: 20%, 20%**
  - **1 final exam: 25%**
  - **1 mid-term project (VHDL): 10%**
  - **1 final project (VHDL): 20%**
  - **Attendance: 5%, absence without asking for leave by E-MAIL (erayhsieh@cc.ncu.edu.tw) → Deduct one point, if accumulating 5 deductions, YOU FAILED DIRECTLY!!**
  - **CANNOT CHEAT NOR COPY. If you cheat or copy, YOU FAILED!!**

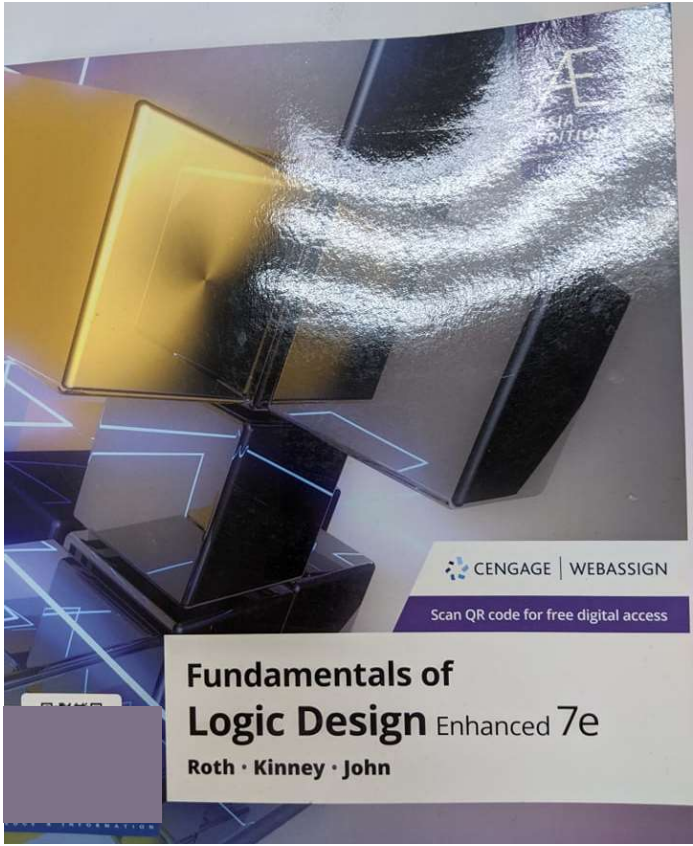

General Information

- Class Hours: Wed. 9:00am to 10:00am; Fri. 15:00 to 17:00
- Professor's Contact Information:
- Official Room: EECS Blgd. 316 room
- E-mail: erayhsieh@cc.ncu.edu.tw
- Teaching Assistant's Contact Information:

  電機系大四 孟憲柏同學: hamburg.meng@gmail.com

  電機系大三 辜釩軒同學: freddyku1@g.ncu.edu.tw

  課堂助手 電機系大二 史諭澤 同學

Agenda (I)

Week	Date	Contents
1 (高年級生開課週)	9/15	Ch. 1 – Introduction Number Systems and Convention
	9/17	
2 (新生開課週)	9/22	Ch. 1 & Ch.2-Boolean Algebra
	9/24	
3	9/29	Ch. 2 & Ch.3-Boolean Algebra (II)
	10/01	
4	10/06	Ch. 3 & Ch.4- Boolean Algebra Minterm and Maxterm Expansion
	10/08	
5	10/13	Ch. 4
	10/15	Ch. 5 – Karnaugh Map
6	10/20	彈性運用
	10/22	1st mid-term (Ch. 1~Ch. 4)

Agenda (II)

Week	Date	Contents
7	10/27	Ch. 5 &
	10/29	Ch.7- Multi-Level Gate Circuits NAND and NOR Gates
8	11/03	Ch. 7 &
	11/05	Ch.8- Combinational Circuit Design and Simulation Using Gates
9	11/10	Ch. 8 &
	11/12	Ch. 9- Multiplexers, Decoders, and Programmable Logic Devices
10	11/17	Ch. 9 &
	11/19	Ch.10- Introduction to VHDL
11	11/24	Ch.10- Introduction to VHDL
	11/26	2nd mid-term (Ch. 5~Ch. 9)

Agenda (III)

Week	Date	Contents
12	12/01,03	Ch.10- Introduction to VHDL
13	12/08, 10	Ch. 11- Latches and Flip-Flops
14	12/15	Ch. 11 & Ch. 12- Registers and Counters
	12/17	
15	12/22	Ch. 12 & Ch. 13- Analysis of Clocked Sequential Circuits
	12/24	
16	12/29	Ch. 13- Analysis of Clocked Sequential Circuits
	12/31	開國紀念日 補假一天
17	01/05	彈性運用
	01/07	Final (Ch. 11~Ch. 13)
18	01/14	Demo of Final-project

Fundamentals of Logic Design-Chapter 1: Introduction Number Systems and Convention

1.1 Digital systems and switching circuits (p.6)

- The design of digital system can be divided into three parts: **system design**, **logic design** and **circuit design**.
- **System design** involves partitioning **the entire system into subsystems** and setting the characteristics of each subsystem.

1.1 Digital systems and switching circuits (p6)

- **Logic design** includes examples of deciding how to link **basic logical architecture blocks inside to perform specific functions**, such as determining the internal links of logical gates and orthotics to perform binary additions.
- **Circuit design** includes specifying internal links to specific components, such as **resistors, diodes, and transistors, to form logic gates, or transverses, or other logical schema blocks.**

1.1 Digital systems and switching circuits (p7)

- Many subsystems of digital systems take the form of Switching circuits, which have one or more discrete input and output values.

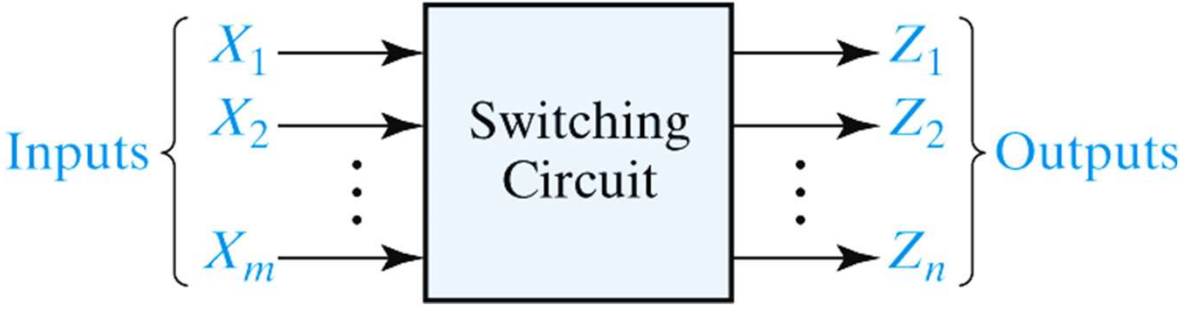

-

- In this book, you'll learn about two types of switching circuits: **combined** and **sequential**.

Hex to Oct to Dec to Binary Conversion (補充)

	2^3 =	2^2 =	2^1 =	2^0 =
$0_{hex} = 0_{dec} = 0_{oct}$	0	0	0	0
$1_{hex} = 1_{dec} = 1_{oct}$	0	0	0	1
$2_{hex} = 2_{dec} = 2_{oct}$	0	0	1	0
$3_{hex} = 3_{dec} = 3_{oct}$	0	0	1	1
$4_{hex} = 4_{dec} = 4_{oct}$	0	1	0	0
$5_{hex} = 5_{dec} = 5_{oct}$	0	1	0	1
$6_{hex} = 6_{dec} = 6_{oct}$	0	1	1	0
$7_{hex} = 7_{dec} = 7_{oct}$	0	1	1	1

	2^3 =	2^2 =	2^1 =	2^0 =
$8_{hex} = 8_{dec} = 10_{oct}$	1	0	0	0
$9_{hex} = 9_{dec} = 11_{oct}$	1	0	0	1
$A_{hex} = 10_{dec} = 12_{oct}$	1	0	1	0
$B_{hex} = 11_{dec} = 13_{oct}$	1	0	1	1
$C_{hex} = 12_{dec} = 14_{oct}$	1	1	0	0
$D_{hex} = 13_{dec} = 15_{oct}$	1	1	0	1
$E_{hex} = 14_{dec} = 16_{oct}$	1	1	1	0
$F_{hex} = 15_{dec} = 17_{oct}$	1	1	1	1

1.2 Digital systems and transformations (p8)

- **Positional notation**

Power of 10:

$$953.78_{10} = 9\times10^{2} + 5\times10^{1} + 3\times10^{0} + 7\times10^{-1} + 8\times10^{-2}$$

Power of 2:

$$1011.11_{2} = 1\times2^{3} + 0\times2^{2} + 1\times2^{1} + 1\times2^{0} + 1\times2^{-1} + 1\times2^{-2}$$

$$= 8 + 0 + 2 + 1 + \tfrac{1}{2} + \tfrac{1}{4} = 11\tfrac{3}{4} = 11.75_{10}$$

1.2 Digital systems and transformations (p9)

- *Power of R:*
- ***Any positive integer R (R > 1)*** *can be used as a* ***base*** *of a digital system*

$$N = \left(a_4 a_3 a_2 a_1 a_0 . a_{-1} a_{-2} a_{-3}\right)_R$$
$$= a_4 \times R^4 + a_3 \times R^3 + a_2 \times R^2 + a_1 \times R^1 + a_0 \times R^0$$
$$+ a_{-1} \times R^{-1} + a_{-2} \times R^{-2} + a_{-3} \times R^{-3}$$

Where a_i is the coefficient of R^i, and $0 \leq ai \leq R - 1$.

1.2 Digital systems and transformations (p9)

- For example:

$$147.3_8 = 1\times 8^2 + 4\times 8^1 + 7\times 8^0 + 3\times 8^{-1} = 64 + 32 + 7 + \tfrac{3}{8}$$
$$= 103.375_{10}$$

Letters are usually used to represent words larger than 9.

For example, in sixteen digits (bottom 16), A is 1010 (10), B is 1011(11), C is 1100(12), D is 1101 (13), E is 1110 (14), and F is 1111 (15).

$$A2F_{16} = 10\times 16^2 + 2\times 16^1 + 15\times 16^0 = 2560 + 32 + 15 = 2607_{10}$$

1.2 Digital systems and transformations (p10)

- Use division to convert the decimal integer into a base number R.

$$N = (a_n a_{n-1} \cdots a_2 a_1 a_0)_R = a_n R^n + a_{n-1} R^{n-1} + \cdots + a_2 R^2 + a_1 R^1 + a_0$$

$$\frac{N}{R} = a_n R^{n-1} + a_{n-1} R^{n-2} + \cdots + a_2 R^1 + a_1 = Q_1 \text{ ， 餘數 } a_0$$

$$\frac{Q_1}{R} = a_n R^{n-2} + a_{n-1} R^{n-3} + \cdots + a_3 R^1 + a_2 = Q_2 \text{ ， 餘數 } a_1$$

$$\frac{Q_2}{R} = a_n R^{n-3} + a_{n-1} R^{n-4} + \cdots + a_3 = Q_3 \text{ ， 餘數 } a_2$$

$$\vdots$$

This step continues until the end.

Note that the remainder of each division is a number to be obtained, and that is **the least (lowest) significant digit** is sought first.

1.2 Digital systems and transformations (p10)

- Convert 53_{10} to binary digits

$$
\begin{array}{lll}
2\,\underline{/53} & & \\
2\,\underline{/26} & \text{餘數} = 1 = a_0 & \\
2\,\underline{/13} & \text{餘數} = 0 = a_1 & \\
2\,\underline{/6} & \text{餘數} = 1 = a_2 & 53_{10} = 110101_2 \\
2\,\underline{/3} & \text{餘數} = 0 = a_3 & \\
2\,\underline{/1} & \text{餘數} = 1 = a_4 & \\
0 & \text{餘數} = 1 = a_5 &
\end{array}
$$

1.2 Digital systems and transformations (p10)

- You can convert decimal decimals to base R by multiplying them continuously by R.

$$F = \left(0.a_{-1}a_{-2}a_{-3}\cdots a_{-m}\right)_{\mathrm{R}} = a_{-1}R^{-1} + a_{-2}R^{-2} + a_{-3}R^{-3} + \cdots + a_{-m}R^{-m}$$

$$FR = a_{-1} + a_{-2}R^{-1} + a_{-3}R^{-2} + \cdots + a_{-m}R^{-m+1} = a_{-1} + F_1$$

$$F_1R = a_{-2} + a_{-3}R^{-1} + \cdots + a_{-m}R^{-m+2} = a_{-2} + F_2$$

$$F_2R = a_{-3} + \cdots + a_{-m}R^{-m+3} = a_{-3} + F_3$$

- This step continues until sufficient digits are sought. Notice that the integer portion of each result is a number you want, and that **the most significant digit** is the most significant number first.

1.2 Digital systems and transformations (p11)

- Convert 0.625_{10} to binary digits.

$$F = 0.625 \qquad F_1 = 0.250 \qquad F_2 = 0.500$$

$$\begin{array}{r} \times \quad 2 \\ \hline \underline{1.250} \\ (a_{-1} = 1) \end{array} \qquad \begin{array}{r} \times \quad 2 \\ \hline \underline{0.500} \\ (a_{-2} = 0) \end{array} \qquad \begin{array}{r} \times \quad 2 \\ \hline \underline{1.000} \\ (a_{-3} = 1) \end{array}$$

$$0.625_{10} = 0.101_2$$

(p11)

1.2 Digital systems and transformations

- Convert 0.7_{10} to binary digits.

$$
\begin{array}{rl}
0.7 & \\
\underline{\qquad 2} & \\
(1)\ 0.4 & <0 \\
\underline{\qquad 2} & \\
(0)\ 0.8 & <0 \\
\underline{\qquad 2} & \\
(1)\ 0.6 & <0 \\
\underline{\qquad 2} & \\
(1)\ 0.2 & <0 \\
\underline{\qquad 2} & \\
(0)\ 0.4 & \leftarrow \text{從此處開始循環，因為之前就已經出現0.4} \\
\underline{\qquad 2} & \\
(0)\ 0.8 &
\end{array}
$$

$$0.7_{10} = 0.1\ \underline{0110}\ \underline{0110}\ \underline{0110}\ldots_2$$

1.2 Digital systems and transformations (p12)

- Convert 231.3_4 to the base 7:

$$231.3_4 = 2 \times 16 + 3 \times 4 + 1 + \frac{3}{4} = 45.75_{10}$$

$$\begin{array}{r|l} 7 & 45 \\ 7 & 6 \quad \text{餘數} = 3 \\ & 0 \quad \text{餘數} = 6 \end{array}$$

$$\begin{array}{r} 0.75 \\ \times\ 7 \\ \hline (5)\ 0.25 \\ \times\ 7 \\ \hline (1)\ 0.75 \\ \times\ 7 \\ \hline (5)\ 0.25 \\ \times\ 7 \\ \hline (1)\ 0.75 \end{array}$$

$$45.75_{10} = 63.5151\ldots_7$$

1.2 Digital systems and transformations (p12)

- The conversion from binary to hex (or vice versa).

(補位) (補位)

$$\underbrace{0}\underbrace{1001}\underbrace{1101}.\underbrace{0101}\underbrace{1100}\underbrace{0} = \underbrace{0100}_{4}\ \underbrace{1101}_{D}\ .\ \underbrace{0101}_{5}\ \underbrace{1100}_{C} = 4D.5C_{16} \tag{1-1}$$

1.3 Binary arithmetic (p12)

- The addition table for the binary digits is as follows:

$$0+0=0$$

$$0+1=1$$

$$1+0=1$$

$$1+1=0$$ 同時進位1到下一行

1.3 Binary arithmetic (p13)

- Add 13_{10} to 11_{10} in binary :

$$
\begin{array}{rl}
 & 1111 \longleftarrow \text{進位} \\
13_{10} = & 1101 \\
11_{10} = & \underline{1011} \\
 & 11000 = 24_{10}
\end{array}
$$

1.3 Binary arithmetic (p13)

- The subtraction table for the binary digits is as follows::

$$0-0=0$$

$$0-1=1$$ 同時從上一行借位1

$$1-0=1$$

$$1-1=0$$

1.3 Binary arithmetic (p13)

(a)

$$
\begin{array}{r}
11101 \\
-\ 10011 \\
\hline
=\ 01010
\end{array}
\quad \Rightarrow \quad
\begin{array}{r}
\overbrace{}^{02\ \text{(從第3行借位)}} \\
11\cancel{1}01 \\
-\ 10011 \\
\hline
=\ 01010
\end{array}
$$

(b)

$$\begin{array}{r} 10000 \\ -\ 00011 \\ \hline = \end{array}$$

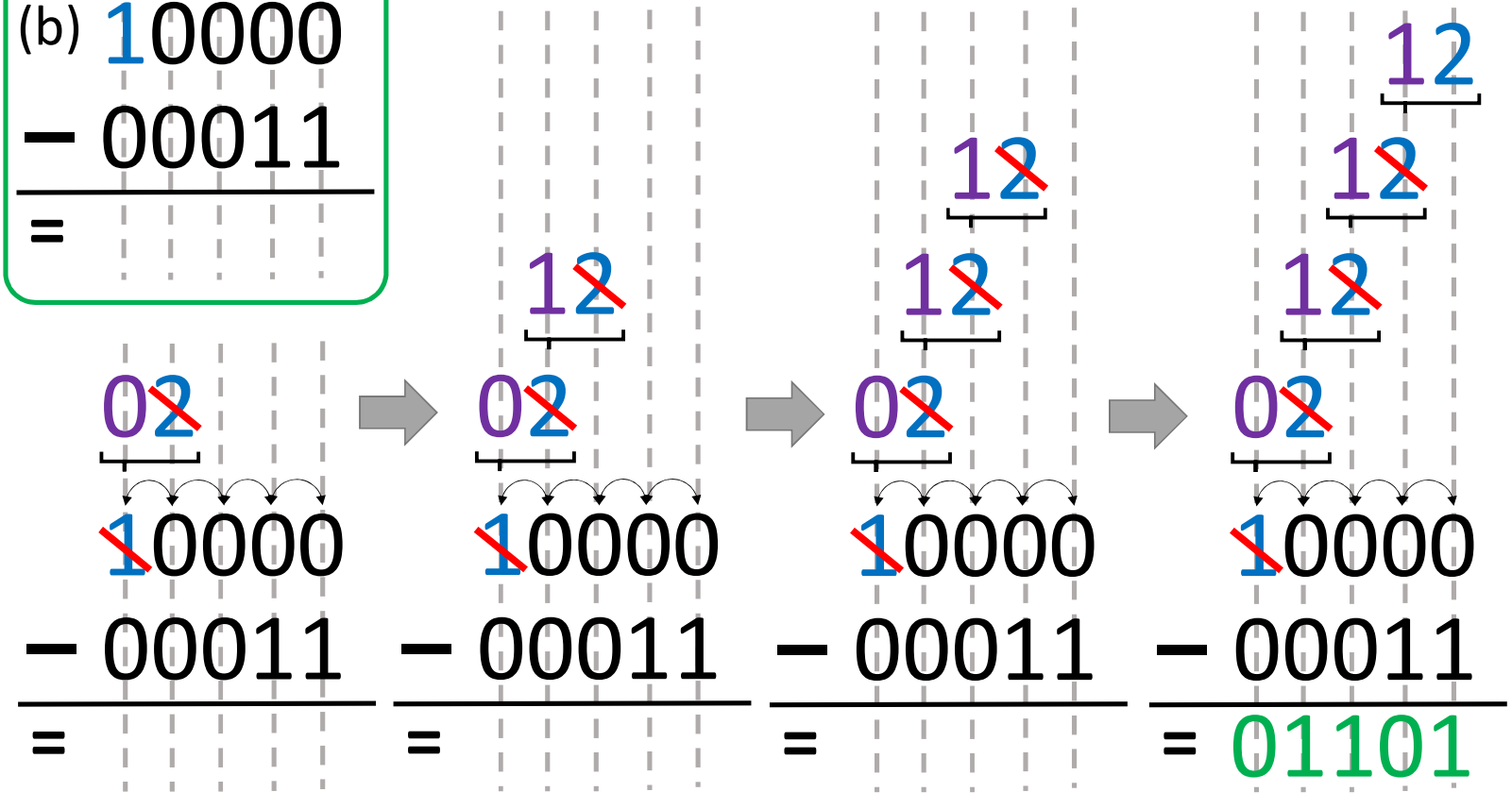

(c)

$$\begin{array}{r} 111001 \\ -\ 001011 \\ \hline = \quad \end{array}$$

$$\begin{array}{r} 111001 \\ -\ 001011 \\ \hline = \qquad 0 \end{array}$$

$$\begin{array}{r} 02 \\ 111001 \\ -\ 001011 \\ \hline = \qquad 0 \end{array}$$

$$\begin{array}{r} 12 \\ 0\cancel{2} \\ 111001 \\ -\ 001011 \\ \hline = \qquad 110 \end{array}$$

(c)

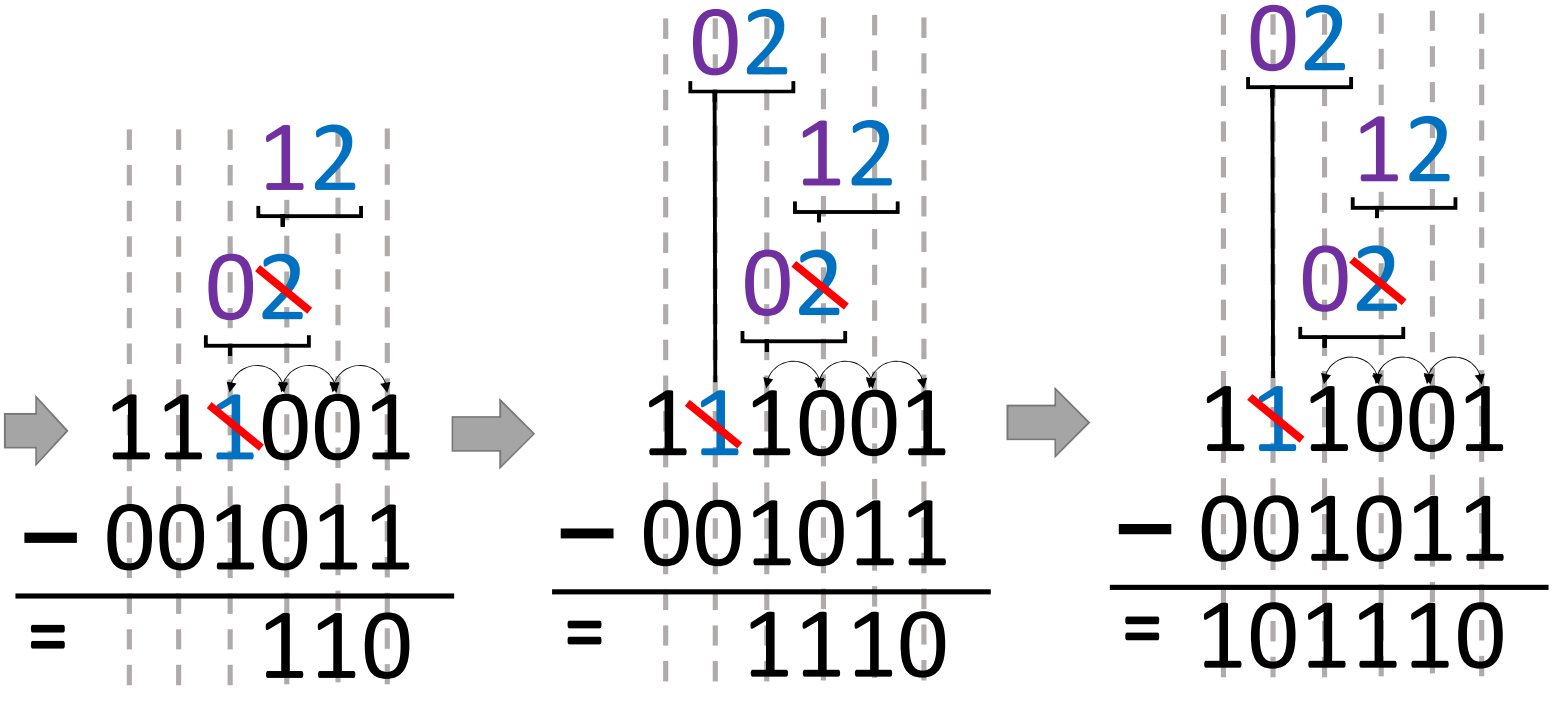
12
02
111001
− 001011
= 110
02
12
02
111001
− 001011
= 1110
02
12
02
111001
− 001011
= 101110

(補充)

(d)

$$
\begin{array}{r}
010110 \\
-\ 011011 \\
\hline
=\
\end{array}
$$

$$
\begin{array}{r}
02 \\
010\cancel{1}10 \\
-\ 011011 \\
\hline
=\ 1
\end{array}
\qquad
\begin{array}{r}
02 \\
02 \\
010\cancel{11}0 \\
-\ 011011 \\
\hline
=\ 011
\end{array}
\qquad
\begin{array}{r}
02 \\
02 \quad 02 \\
0\cancel{1}0\cancel{11}0 \\
-\ 011011 \\
\hline
=\ 1011
\end{array}
$$

(d)

$$
\begin{array}{r}
010110 \\
-\ 011011 \\
\hline
=\
\end{array}
$$

$$
\begin{array}{r}
02 \\
\text{沒得借}\ 02 \quad 02 \\
0\cancel{1}0\cancel{11}0 \\
-\ 011011 \\
\hline
=\ \ \ \ 1011
\end{array}
$$

$$
\begin{array}{r}
02 \\
\text{沒得借}\ 02 \quad 02 \\
0\cancel{1}0\cancel{11}0 \\
-\ 011011 \\
\hline
=\ ??1011
\end{array}
$$

沒有負號系統，無法計算

-> 不可以小減大，只能大減小。

1.3 Binary arithmetic (p14)

- The following example illustrates the binary multiplication of 13_{10} by 11_{10}:

$$
\begin{array}{r}
1101 \\
1011 \\
\hline
1101 \\
1101 \\
0000 \\
1101 \\
\hline
10001111
\end{array}
= 143_{10}
$$

1.3 Binary arithmetic (p15)

- The following example illustrates the binary division of 145_{10} divided by 11_{10}:

$$145_{10}=10010001_2$$

$$11_{10}=1011_2$$

$$\underline{1011}\overline{)10010001}$$

1.3 Binary arithmetic (p15)

- The following example illustrates the binary division of 145_{10} divided by 11_{10}:

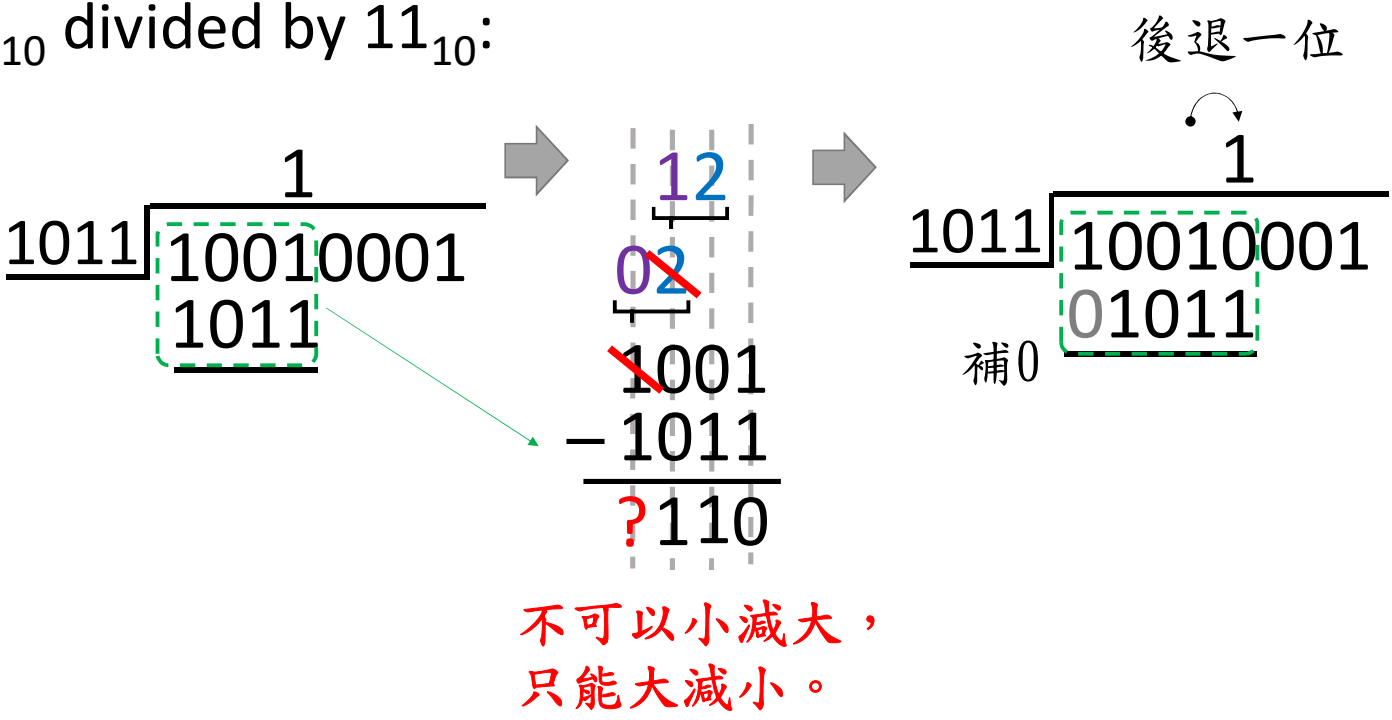

1.3 Binary arithmetic (p15)

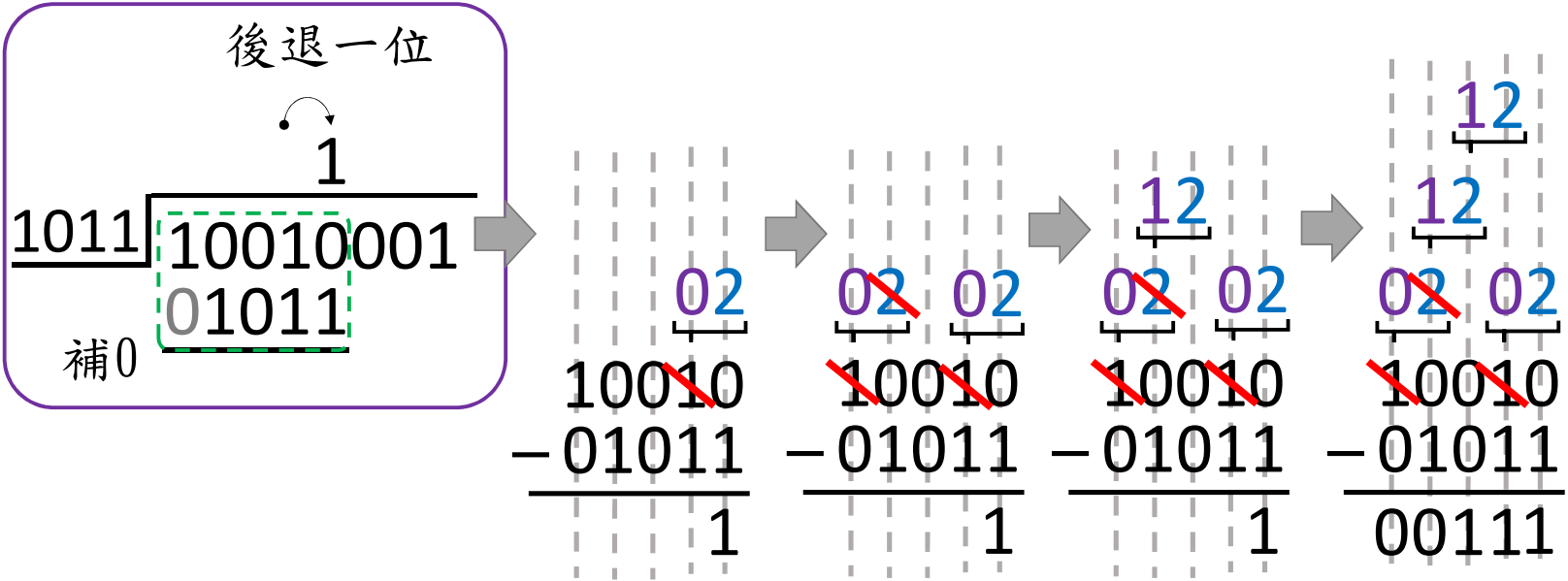

1.3 Binary arithmetic (p15)

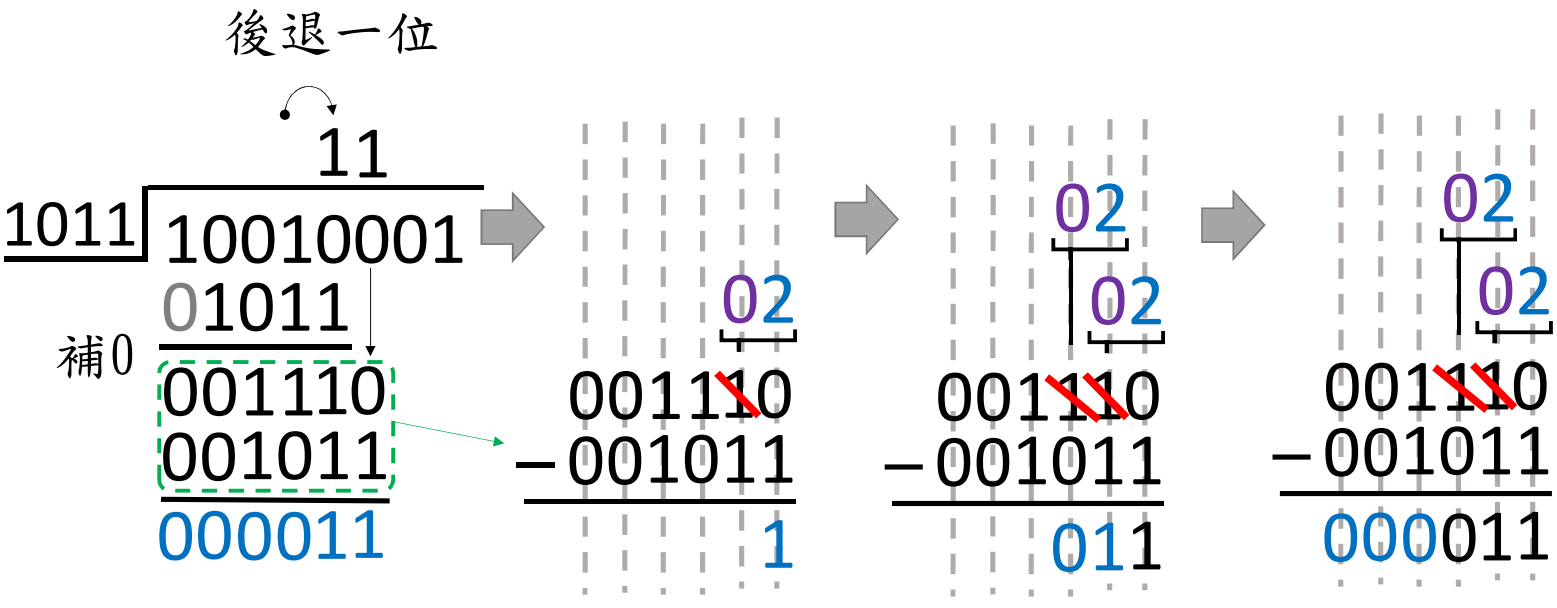

1.3 Binary arithmetic (p15)

後退一位

```
        1110                      1101
1011 ) 10010001           1011 ) 10010001
       01011                     01011
補0    001110                    001110
       001011                    001011
       00001101                  00001101
                                     1011
                                       10
```

所得的商為 1101，餘數為 10。

1.4 The number of the complement method (p16)

- 2 Supplement system:
- A positive N notation is a size N that is represented by **a symbol** + **a size method**.
- Negative number (- N) is expressed in its **2 complement N**.
- If the word group length is n bits, **the 2 complement (N*)** of the positive integer N is defined as follows:

The 2 complement (N*): $$N^* = 2^n - N \quad (1\text{-}2)$$

Table 1-1 shows the result of n-4, and as shown in Table 1-1, the negative number of the 2 complement method from -1 to -7 can be obtained by taking the 2 complements of its positive numbers 1 to 7 (i.e. minus 16).

1.4 Representation of negative numbers (p16)

表 1-1 有號二進制整數（字組長度：$n=4$）

"1": 負號
"0": 正號

$+N$	N 正整數（各系統）	$-N$	負整數 符號與大小	負整數 2 補數 N^* (2^n-N)	負整數 1 補數 $\overline{N}$
+0	0000	−0	1000	——	1111
+1	0001	−1	1001	1111	1110
+2	0010	−2	1010	1110	1101
+3	0011	−3	1011	1101	1100
+4	0100	−4	1100	1100	1011
+5	0101	−5	1101	1011	1010
+6	0110	−6	1110	1010	1001
+7	0111	−7	1111	1001	1000
		−8	——	1000	——

缺點: Digits減少，可表示的數字範圍變少。

1.4 Representation of negative numbers (p16)

+N	N 正整數 （各系統）		負整數 2 補數 N*	-N
+0	0000	10000 – 00000=10000	——	
+1	0001	10000 – 00001=01111	1111	-1
+2	0010	10000 – 00010=01110	1110	-2
+3	0011	10000 – 00011=01101	1101	-3
+4	0100	10000 – 00100=01100	1100	-4
+5	0101	10000 – 00101=01011	1011	-5
+6	0110	10000 – 00110=01010	1010	-6
+7	0111	10000 – 00111=01001	1001	-7

1.4 Representation of negative numbers (p16)

- 1’s complement:

$+N$	正整數（各系統）	$-N$	1 補數 $\overline{N}$
+0	0000	−0	1111
+1	0001	−1	1110
+2	0010	−2	1101
+3	0011	−3	1100
+4	0100	−4	1011
+5	0101	−5	1010
+6	0110	−6	1001
+7	0111	−7	1000
		−8	——

0變1，1變0

1.4 Addition of 2's complement numbers (p17)

- *The addition of n-bit binary numbers (**signed binary numbers**).*
- *If n is 4,*
- *The two positive numbers are added together, and* $< 2^{n-1}$.

+3	0011	
+4	0100	
+7	0111	（正確解）

1.4 Addition of 2 complement numbers (p17)

- The two positive numbers add up, and $\geq 2^{n-1}$

$$\begin{array}{rr} +5 & 0101 \\ +6 & 0110 \\ \hline & 1011 \end{array}$$

負號

overflow

由於溢位，所以答案錯誤

（＋11包括符號共須5位元方能表示）

Correction

$$\begin{array}{rr} +5 & 00101 \\ +6 & 00110 \\ \hline & 01011 \end{array}$$

(補位)

(更正 -> 多一個最左邊的digit)

“溢位”就要”補位”

1.4 Addition of 2's complement numbers (p18)

- The positive and negative numbers are added (when the value of the negative number is larger).

	+5	0101
	−6	1010
負號	−1	1111 （正確解）

2補數還原: 10000-01111= 00001 (正數) * (-1)

（看到2補數負數要還原成正數再加負號）

1.4 Addition of 2's complement numbers (p18)

- The two negative numbers are added, and $> 2^{n-1}$.

$$\begin{array}{rr} -5 & 1011 \\ \underline{-6} & \underline{1010} \\ & (1)\ 0101 \end{array}$$

由於溢位，所以答案錯誤
（–11包括符號共須5位元方能表示）

Correction

(補位)

$$\begin{array}{rr} -5 & 01011 \\ \underline{-6} & \underline{01010} \\ & 10101 \end{array}$$

"溢位"就要"補位"

2補數還原: 100000-010101= $\underbrace{\overbrace{0001011}^{11}\ (\text{正數})\ *\ (-1)}_{-11}$

1.4 Addition of 2's complement numbers (p18)

- When the sum < 2^{n-1},

  this sum is the final answer.

- When the sum > 2^{n-1},

  over-flow (溢位) → fill a bit (補位)

1.4 Addition of 2's complement numbers (p18)

- The two negative numbers are added, and $> 2^{n-1}$.
  - The proof is as follows:

$$-A + B \quad (\text{if } B > A);$$

(補位)

$$A^* + B = (2^n - A) + B = 2^n + \boxed{(B - A}$$

  - Discarding the final digit is equivalent to subtracting 2^n, so the result is (B - A) as the correct solution!

1.4 Addition of 2's complement numbers (p18)

- The two negative numbers are added, and $> 2^{n-1}$.

$-A - B$ （if $A + B \leq 2^{n-1}$ ）

$$A^* + B^* = (2^n - A) + (2^n - B) = 2^n + \cancel{2^n} - (A + B)$$

(溢位)

- Discard the last digit and get $2^n - (A + B) = (A + B)^*$, which is the correct representation of the $-(A + B)$.

1.4 Addition of 2's complement numbers (p18)

- The addition of -8 and + 19 is performed by 2 complements.

1: +8 = 00001000;

+19 = 00010011;

2: Take the 2 complement

$$
\begin{array}{rrl}
 & 100000000 & \\
- & 00001000 & +8 \\
\hline
 & 11111000 & -8
\end{array}
$$

3:

$$
\begin{array}{rrl}
 & 11111000 & (-8) \\
 & 00010011 & +19 \\
\hline
\cancel{(1)} & 00001011 = +11 &
\end{array}
$$

（捨棄最後之進位）

1.4 Addition of 1's complement numbers (p19)

- In a 1 complement system, a negative number - N is represented by a 1 complement of $\overline{N}$, as defined as follows:

$$\bar{N} = (2^n - 1) - N \qquad (1\text{-}4)$$

$$= \underbrace{(2^n - N)} - 1$$

1's compliment = 2's compliment - 1

1.4 Addition of 1's complement numbers (p19)

$$\bar{N} = (2^n - N) - 1 \quad (1\text{-}4)$$

$+N$	正整數（各系統）	$-N$	1 補數 $\bar{N}$
+0	0000	−0	1111
+1	0001	−1	1110
+2	0010	−2	1101
+3	0011	−3	1100
+4	0100	−4	1011
+5	0101	−5	1010
+6	0110	−6	1001
+7	0111	−7	1000
		−8	

"-0"和"+0"表示法不一樣

1補數的負數的最左邊位元皆為1

0變1，1變0

1.4 Addition of 1's complement numbers (p19)

- The addition of 1 complement numbers is very similar to the addition of 2 complements, except that

"the addition of 1 complements does not abandon the final digit but adds the incoming bit to the n-bit sum of the minimum bits, which is called **end-around carry." (末位遞迴進位)**

1.4 Addition of 1's complement numbers (p19)

- The case of positive sum is exactly the same as in Examples 1 and 2 of the 2 complements, with the other examples described below (n=4).

Eq. 1 The positive and negative numbers are added (when the value of the negative number is larger).

$$\begin{array}{rr} +5 & 0101 \\ \underline{-6} & \underline{1001} \\ -1 & 1110 \end{array}$$

（正確解）

1補數還原: 1110 → 0001 * (-1) →-1

(0←→1)

1.4 Addition of 1's complement numbers (p19)

- When the positive value is larger.

(溢位)

	-5	1010	
	$+6$	0110	
Step1:	(1)	0000	
Step2:		1	（末位遞迴進位）
Step3:		0001	（正確解，沒有溢位）

1.4 Addition of 1's complement numbers (p20)

- The two negative numbers are added, and < 2^{n-1}.

–3	1100	
–4	1011	
-7	(1) 0111	
	1	（末位遞迴進位）
	1000	（正確解，沒有溢位）

(溢位)

1補數還原: 1000 → 0111 * (-1) → -7

(0←→1)

1.4 Addition of 1's complement numbers (p20)

- The two negative numbers are added, and > 2^{n-1}.

−5	1010	
−6	1001	
-11	(1) 0011	
	1	（末位遞迴進位）
	0100	（錯誤解，因為有溢位）

(溢位)

Correction

−5	11010
−6	11001
-11	10100

(補位)

1補數還原: 10100 → 01011 * (-1) →-11

(0←→1)

1.4 Addition of 1's complement numbers (p20)

- The two positive numbers are added, and > 2^{n-1}.

	+5	0101
	+6	0110
+8 < +11		1011 -4 of 1'

(溢位)

Correction

	+5	00101
	+6	00110
+16> +11		01011 (正確解)

(補位)

1.4 Addition of 1's complement numbers (p20)

- When the sum < 2^{n-1},

  the end-around carry. (末位遞迴進位)

- When the sum > 2^{n-1},

  over-flow (溢位) → fill a bit (補位)

- Addition of 1 complement numbers
  - When the sum < 2^{n-1},

    the end-around carry. (末位遞迴進位)
  - When the sum > 2^{n-1},

    over-flow (溢位) → fill a bit (補位)

- Addition of 2 complement numbers
  - When the sum < 2^{n-1},

    this sum is the final answer.
  - When the sum > 2^{n-1},

    over-flow (溢位) → fill a bit (補位)

➡ 2’ is easier to do calculation than 1’.

1.4 Addition of 1's complement numbers (p20)

- The proof is as follows:

Eq. : $-A + B$ （if $B > A$）

$$\bar{A} + B = (2^n - 1 - A) + B = 2^n + (B - A) - 1$$
$$= (2^n - 1) + (B - A) = B - A$$

The last recursive bit is equivalent to subtracting 2^n and adding 1, so the result is (B - A) correct solution.

1.4 Addition of 1's complement numbers (p20)

- The proof is as follows:

Eq. : $-A - B$ （if $A+B \leq 2^{n-1}$）

$$\bar{A} + \bar{B} = (2^n - 1 - A) + (2^n - 1 - B)$$
$$= 2^n + [2^n - 1 - (A + B)] - 1$$
$$= 2^n - 1 - \overline{A + B} = \overline{\overline{A + B}}$$

$$\Rightarrow \quad \bar{A} + \bar{B} = \overline{\overline{A + B}}$$

1.4 Addition of 1's complement numbers (p20)

$$\bar{A} + \bar{B} = \overline{\overline{A + B}}$$

$$\begin{cases} A=5 \\ B=6 \end{cases} \qquad \begin{cases} \bar{A} = -5 \\ \bar{B} = -6 \end{cases}$$

$$\begin{array}{lll} -5 & 1010 & \bar{A} \\ & & + \\ -6 & 1001 & \bar{B} \\ \hline \cancel{(1)} & 0011 & \end{array}$$

$$\rightarrow 1100 \rightarrow 01100 \rightarrow 10011$$

(補位)

(正確解)

$$\overline{A + B} \qquad \overline{\overline{A + B}} \qquad 1'$$

$$=A+B=5+6=11$$

1.4 Addition of 1's complement numbers (p21)

- The following example illustrates the addition of 1 complement when the length of the word group n is 8 respectively:
- The addition of -11 and -20 is performed by 1 complement.

1: +11 = 00001011;
+20 = 00010100

2: Take the 1 complement
–11→ 11110100;
–20→ 11101011
(0←→1)

3:

$$
\begin{array}{rll}
 & 11110100 & (-11) \\
 & \underline{11101011} & \underline{+(-20)} \\
(1) & 11011111 & \\
 & \underline{\llcorner\!\!\longrightarrow 1} & \text{（末位遞迴進位）} \\
 & 11100000 = -31 &
\end{array}
$$

1.5 Encoded Binary Codes and 美國資訊交換標準碼（American Standard Code for Information Interchange, ASCII）

(p23)

表 1-3 ASCII 碼

字元	ASCII 碼 A_6	A_5	A_4	A_3	A_2	A_1	A_0	字元	ASCII 碼 A_6	A_5	A_4	A_3	A_2	A_1	A_0	字元	ASCII 碼 A_6	A_5	A_4	A_3	A_2	A_1	A_0
space	0	1	0	0	0	0	0	@	1	0	0	0	0	0	0	‘	1	1	0	0	0	0	0
!	0	1	0	0	0	0	1	A	1	0	0	0	0	0	1	a	1	1	0	0	0	0	1
“	0	1	0	0	0	1	0	B	1	0	0	0	0	1	0	b	1	1	0	0	0	1	0
#	0	1	0	0	0	1	1	C	1	0	0	0	0	1	1	c	1	1	0	0	0	1	1
$	0	1	0	0	1	0	0	D	1	0	0	0	1	0	0	d	1	1	0	0	1	0	0
%	0	1	0	0	1	0	1	E	1	0	0	0	1	0	1	e	1	1	0	0	1	0	1
&	0	1	0	0	1	1	0	F	1	0	0	0	1	1	0	f	1	1	0	0	1	1	0
’	0	1	0	0	1	1	1	G	1	0	0	0	1	1	1	g	1	1	0	0	1	1	1
(	0	1	0	1	0	0	0	H	1	0	0	1	0	0	0	h	1	1	0	1	0	0	0
)	0	1	0	1	0	0	1	I	1	0	0	1	0	0	1	i	1	1	0	1	0	0	1
*	0	1	0	1	0	1	0	J	1	0	0	1	0	1	0	j	1	1	0	1	0	1	0
+	0	1	0	1	0	1	1	K	1	0	0	1	0	1	1	k	1	1	0	1	0	1	1
,	0	1	0	1	1	0	0	L	1	0	0	1	1	0	0	l	1	1	0	1	1	0	0
—	0	1	0	1	1	0	1	M	1	0	0	1	1	0	1	m	1	1	0	1	1	0	1
.	0	1	0	1	1	1	0	N	1	0	0	1	1	1	0	n	1	1	0	1	1	1	0
/	0	1	0	1	1	1	1	O	1	0	0	1	1	1	1	o	1	1	0	1	1	1	1
0	0	1	1	0	0	0	0	P	1	0	1	0	0	0	0	p	1	1	1	0	0	0	0
1	0	1	1	0	0	0	1	Q	1	0	1	0	0	0	1	q	1	1	1	0	0	0	1
2	0	1	1	0	0	1	0	R	1	0	1	0	0	1	0	r	1	1	1	0	0	1	0
3	0	1	1	0	0	1	1	S	1	0	1	0	0	1	1	s	1	1	1	0	0	1	1
4	0	1	1	0	1	0	0	T	1	0	1	0	1	0	0	t	1	1	1	0	1	0	0
5	0	1	1	0	1	0	1	U	1	0	1	0	1	0	1	u	1	1	1	0	1	0	1
6	0	1	1	0	1	1	0	V	1	0	1	0	1	1	0	v	1	1	1	0	1	1	0
7	0	1	1	0	1	1	1	W	1	0	1	0	1	1	1	w	1	1	1	0	1	1	1
8	0	1	1	1	0	0	0	X	1	0	1	1	0	0	0	x	1	1	1	1	0	0	0
9	0	1	1	1	0	0	1	Y	1	0	1	1	0	0	1	y	1	1	1	1	0	0	1
:	0	1	1	1	0	1	0	Z	1	0	1	1	0	1	0	z	1	1	1	1	0	1	0
;	0	1	1	1	0	1	1	[	1	0	1	1	0	1	1	{	1	1	1	1	0	1	1
<	0	1	1	1	1	0	0	\	1	0	1	1	1	0	0	|	1	1	1	1	1	0	0
=	0	1	1	1	1	0	1	]	1	0	1	1	1	0	1	}	1	1	1	1	1	0	1
>	0	1	1	1	1	1	0	^	1	0	1	1	1	1	0	~	1	1	1	1	1	1	0
?	0	1	1	1	1	1	1	—	1	0	1	1	1	1	1	delete	1	1	1	1	1	1	1

- Table 1-3 lists a portion of the ASCII code that is not listed as a combination of codes used for special control functions such as "form feed" or "end of transmission". The word "Start" is represented by an ASCII code as follows: (p23)

1010011	1110100	1100001	1110010	1110100
S	t	a	r	t

(p22)

十進位數	8-4-2-1 碼（BCD）	6-3-1-1 碼	超 3 碼	5 占 2 碼	~~格雷碼~~
0	0000	0000	0011	00011	~~0000~~
1	0001	0001	0100	00101	~~0001~~
2	0010	0011	0101	00110	~~0011~~
3	0011	0100	0110	01001	~~0010~~
4	0100	0101	0111	01010	~~0110~~
5	0101	0111	1000	01100	~~1110~~
6	0110	1000	1001	10001	~~1010~~
7	0111	1001	1010	10010	~~1011~~
8	1000	1011	1011	10100	~~1001~~
9	1001	1100	1100	11000	~~1000~~

(補充)

BCD 8-4-2-1 Codes

Decimal	8	4	2	1
	×	×	×	×
0 =	0	0	0	0
1 =	0	0	0	1
2 =	0	0	1	0
3 =	0	0	1	1
4 =	0	1	0	0
5 =	0	1	0	1
6 =	0	1	1	0
7 =	0	1	1	1
8 =	1	0	0	0
9 =	1	0	0	1

(乘以)

(補充)

Exceed 3 Codes

Decimal	8	4	2	1			Ex-3
0 =	0	0	0	0			0011
1 =	0	0	0	1			0100
2 =	0	0	1	0			0101
3 =	0	0	1	1			0110
4 =	0	1	0	0	+	0011	0111
5 =	0	1	0	1			1000
6 =	0	1	1	0			1001
7 =	0	1	1	1			1010
8 =	0	0	0	0			1011
9 =	1	0	0	1			1100

(補充)

BCD 6-3-1-1 Codes

Decimal	6	3	1	1
	✕	✕	✕	✕
0 =	0	0	0	0
1 =	0	0	0	1
2 =	0	0	1	1
3 =	0	1	0	0
4 =	0	1	0	1
5 =	0	1	1	1
6 =	1	0	0	0
7 =	1	0	0	1
8 =	1	0	1	1
9 =	1	1	0	0

2 Out 5 Codes

(你跑我追)

(補充)

Decimal	2 out 5 codes				
0 =	0	0	0	1	1
1 =	0	0	1	0	1
2 =	0	0	1	1	0
3 =	0	1	0	0	1
4 =	0	1	0	1	0
5 =	0	1	1	0	0
6 =	1	0	0	0	1
7 =	1	0	0	1	0
8 =	1	0	1	0	0
9 =	1	1	0	0	0

Gray Codes（補充）

- **Gray code** after Frank Gray, is an ordering of the binary numeral system such that two successive values differ in only one bit (binary digit).
- Encoding Method:
  1. Keep MSB of the binary;
  2. Comparing two neighboring bits:
     a. if same (**S**), produce “0”
     b. if different (**D**), produce “1”

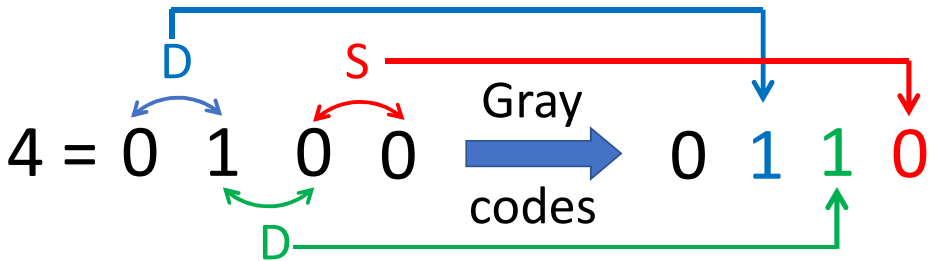

Frank Gray (13 September 1887 – 23 May 1969)

(補充)

Gray Codes

Decimal	Binary				Gray
0 =	0	0	0	0	0000
1 =	0	0	0	1	0001
2 =	0	0	1	0	0011
3 =	0	0	1	1	0010
4 =	0	1	0	0	0110
5 =	0	1	0	1	0111
6 =	0	1	1	0	0101
7 =	0	1	1	1	0100
8 =	1	0	0	0	1100
9 =	1	0	0	1	1101

(補充)

Gray Codes

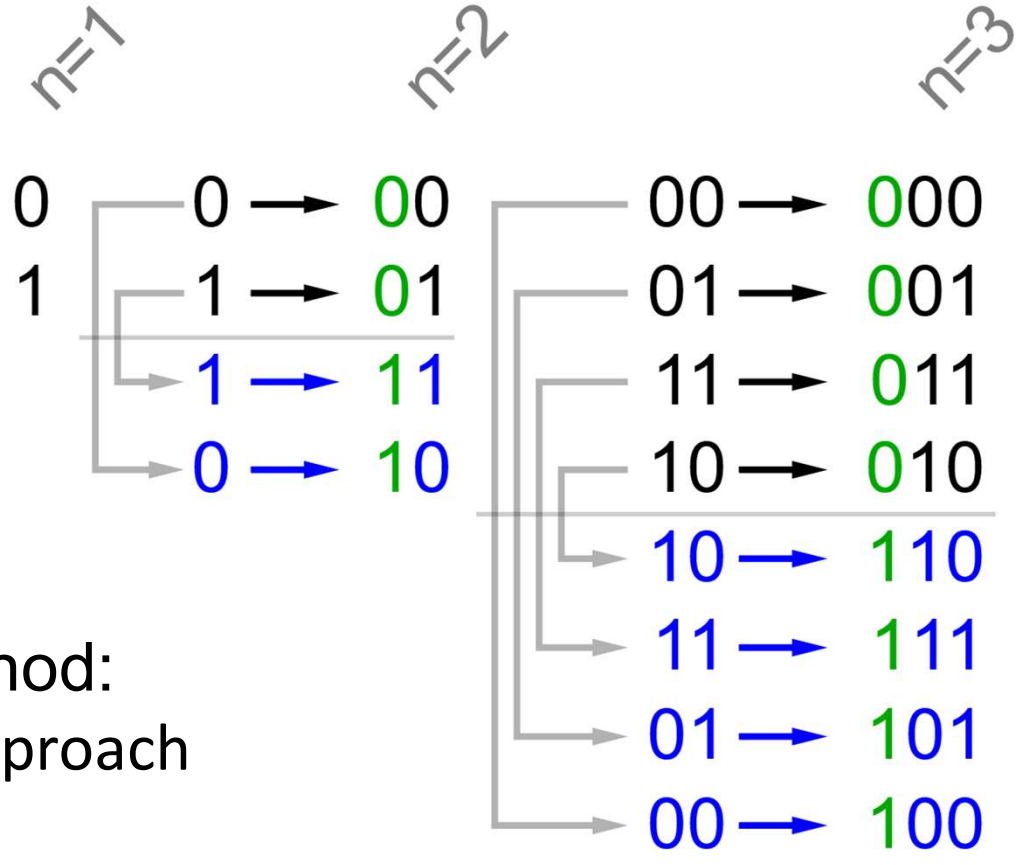

- Encoding Method:

The Symmetric Approach