EE2016-B- Fall 2021

數位系統導論

Fundamentals of Logic Design-Chapter 11: Latches and Flip-Flops

Prof. E Ray Hsieh 謝易叡 助理教授

9.1 Introduction

p. 336

- **Sequential Switching Circuits:** the output depends not only on the present input but also on the past sequence of inputs. → need to memory previous information.
- **Latches** and **flip-flops** are memory devices which assumes one of two stable output states and which have one or more inputs that can cause the output state to change.

9.1 Introduction

p. 337

- **Feedback (回授):** the output of one of the gates is connected back into the input of another gate in the circuit so as to form a closed loop.

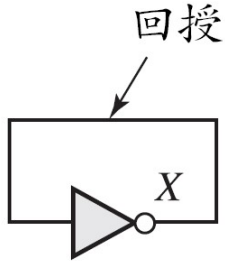

(a) 具回授的反相器

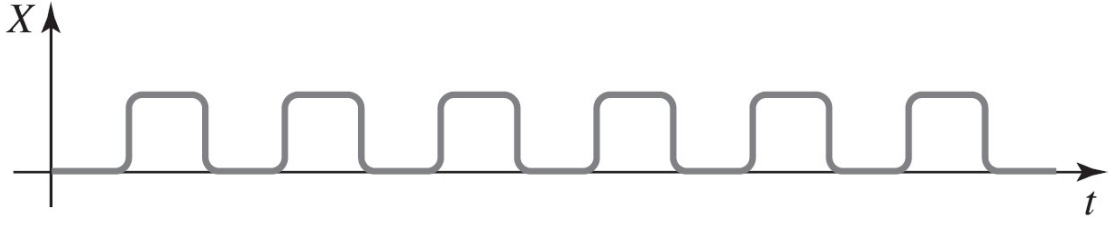

(b) 反相器輸出的振盪現象

(Oscillation)

9.1 Introduction

p. 337

- **Ring Oscillator with even number of gates:**

→the output signals =the input signals

(a)

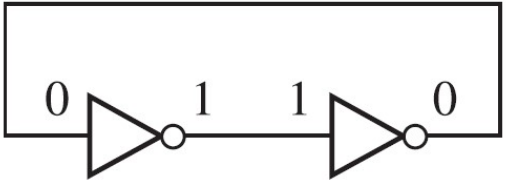

(b)

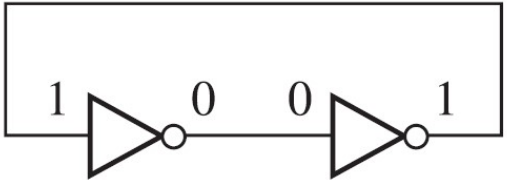

- **Ring Oscillator with odd number of gates:**

→the output signals is inverse to the input signals

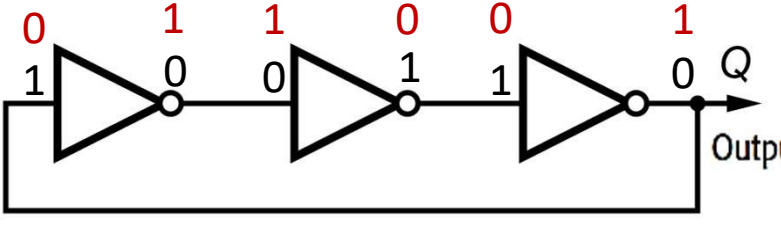

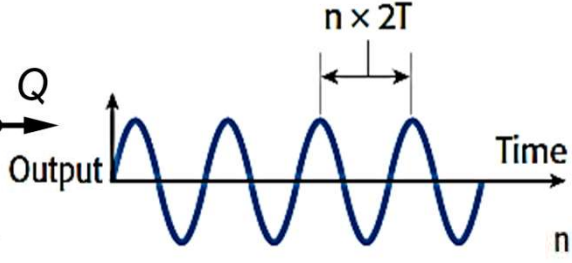

$$\text{Frequency} = \frac{1}{n \times 2T}$$

where T = gate delay,

n = odd number (of stages)

11.2 Set-Reset Latch

p. 338

Stable States:

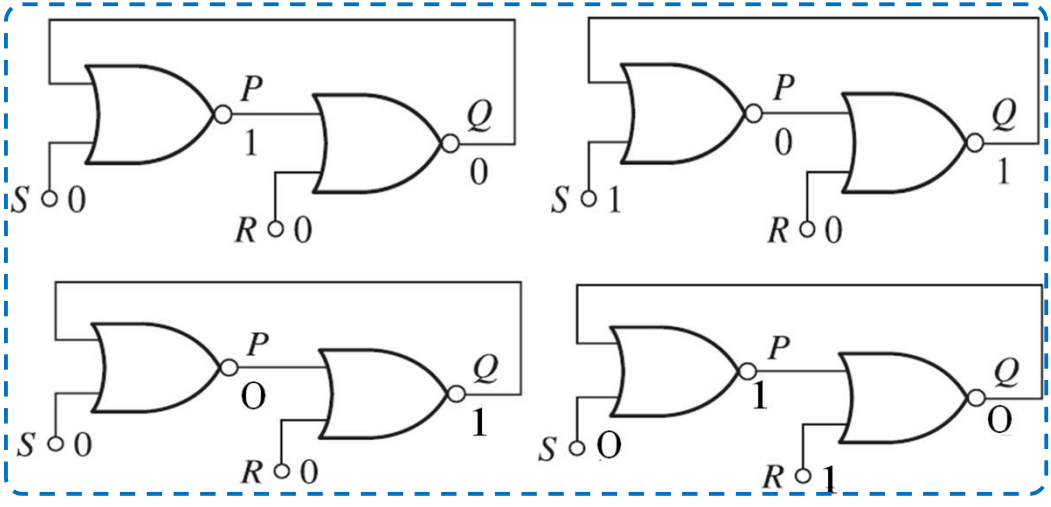

Unstable States:

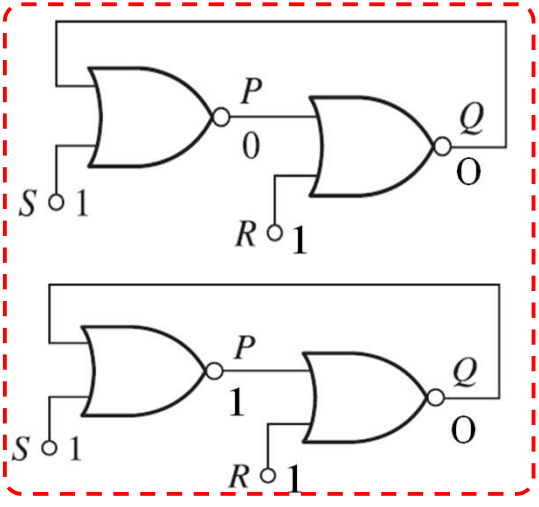

- This circuit is the memory because its output depends not only on the present inputs, but also on the past sequence of inputs. If we restrict the inputs so that R = S = 1, is not allowed.
- The stable state of the outputs P and Q are always complements, **P=Q'.**

11.2 Set-Reset Latch

p. 339

- **Set-Reset Latch:** the latch will not operate properly if S (SET) =R (RESET) =1. However, if S and R are not both equivalent to 1, the outputs, P and Q, are complements.

S-R Latch
1. If S=R=1, not allowed.
2. If S and R ≠ 1, P=Q'.

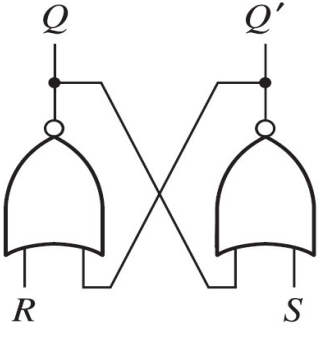

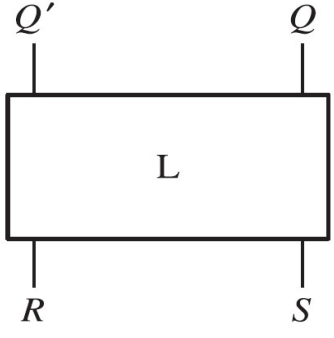

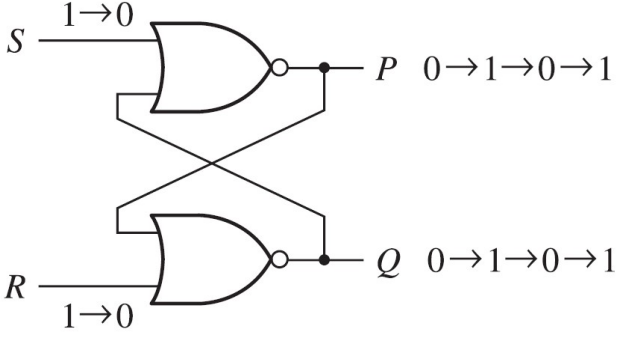

11.2 Set-Reset Latch

p. 339

- **Time diagram of S-R Latch:**

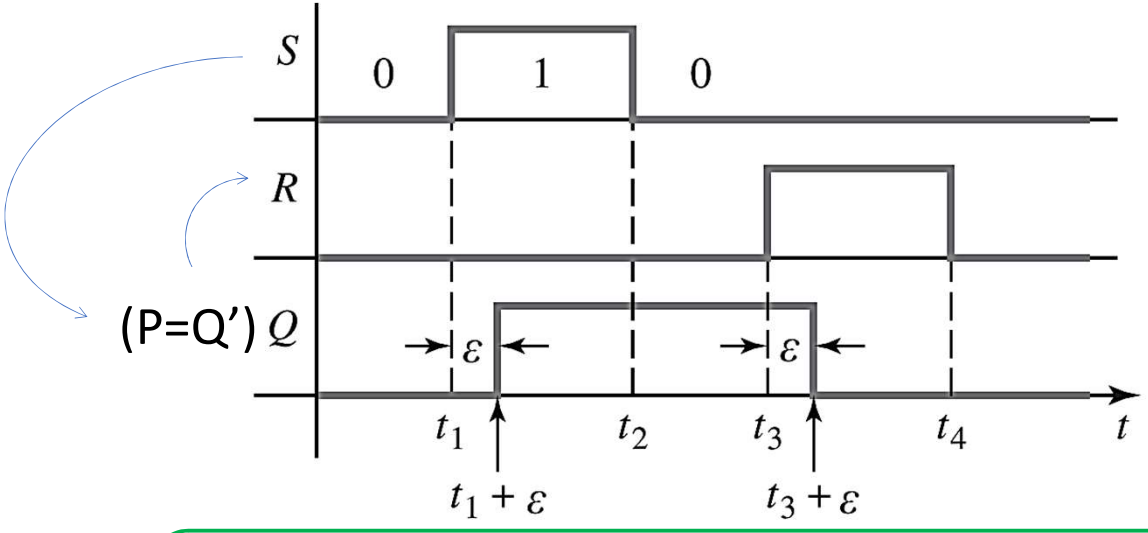

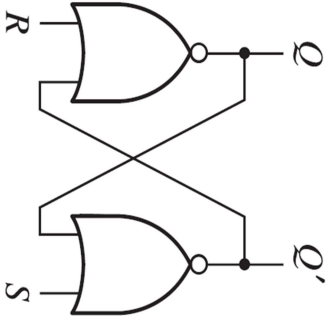

S-R Latch
1. If S=R=1, not allowed.
2. If S and R ≠ 1, P=Q'.

11.2 Set-Reset Latch

p. 340

- **Metastable State:** The voltage level at the output of the two inverters or gates is approximately halfway between the voltage levels for a logic 0 and a logic 1.
- Any noise existing in the circuit will cause the circuit to transition to one of the truly stable states.
- However, certain events can cause the latch to enter the metastable state for a short time.
- The events causing the circuit to enter the metastable state must be avoid. (避免勿操作。)

11.2 Set-Reset Latch

p. 340

- **Present state, Q (t):** the state of the Q output of the latch at the time any input signal changes.
- **Next state, Q(t+ϵ):** the state of the Q output after the latch has reacted to the input change and stabilized.

$$Q(t+\varepsilon) = R(t)'[S(t) + Q(t)] = R(t)'S(t) + R(t)'Q(t) \qquad (11\text{-}1)$$

$$P(t) = S(t)'Q(t)' \qquad (11\text{-}2)$$

$$Q^+ = R'S + R'Q \qquad (11\text{-}3)$$

$Q(t+\epsilon)=Q^+$

$$P = S'Q' \qquad (11\text{-}4)$$

11.2 Set-Reset Latch

p. 340

目前狀態 Q	次一狀態 Q^+ SR 00	SR 01	SR 11	SR 10	目前輸出 P SR 00	SR 01	SR 11	SR 10
0	⓪	⓪	⓪	1	1	1	0	0
1	①	0	0	①	0	0	0	0

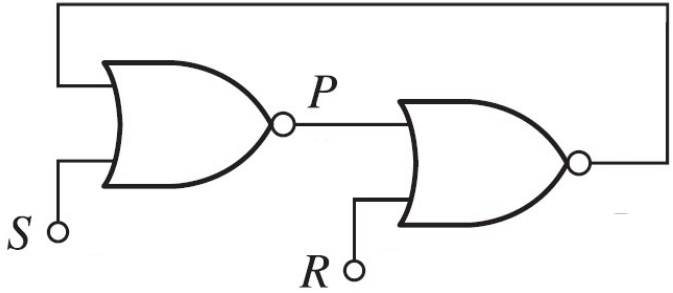

$Q \rightarrow Q^+$

11.2 Set-Reset Latch

p. 341

RQ \ S	0	1
00	0	1
01	1	1
11	0	X
10	0	X

(a) Q^+卡諾圖

S	R	Q	P	Q^+
0	0	0	1	0
0	0	1	0	1
0	1	0	1	0
0	1	1	0	0
1	0	0	0	1
1	0	1	0	1
1	1	0	0	–
1	1	1	0	–

} 不允許的輸入條件

(b) 真值表

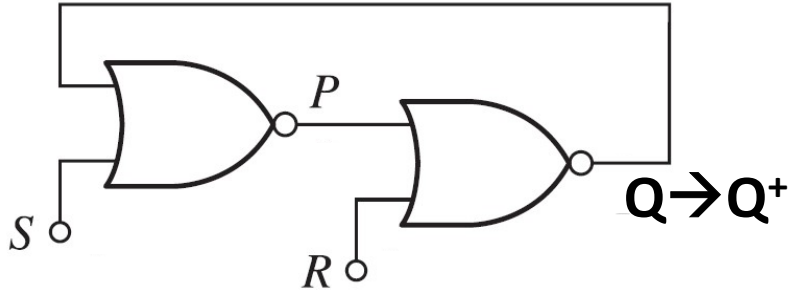

$$Q^+ = S + R'Q \quad (SR = 0) \qquad (10\text{-}5)$$

11.2 Set-Reset Latch

p. 341

- **Application of S-R Latch: Switch Debouncing.**

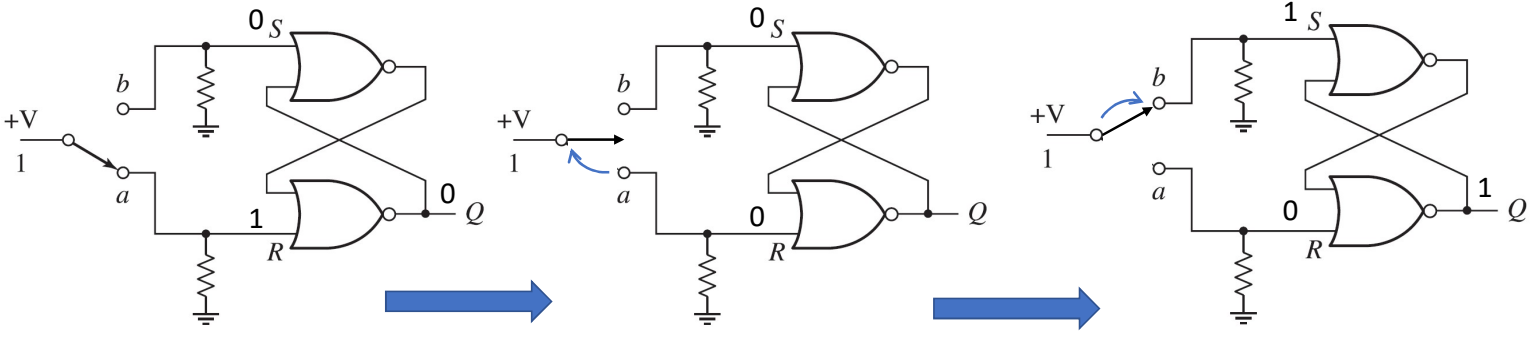

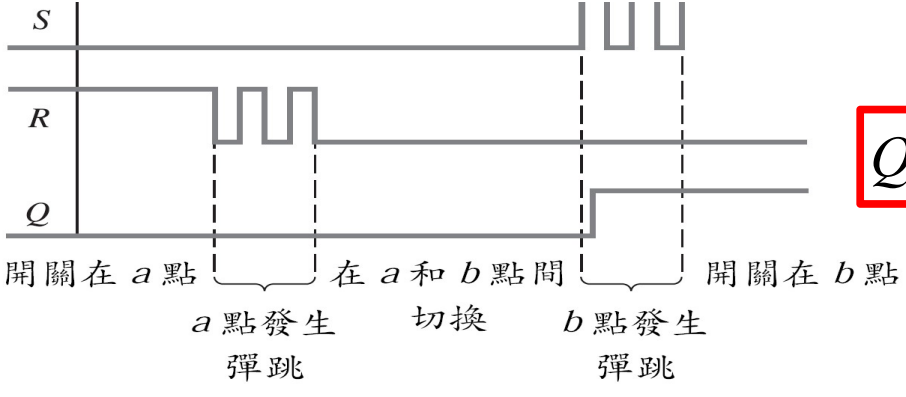

$$Q^{+} = S + R'Q \quad (SR = 0) \qquad (10\text{-}5)$$

11.2 Set-Reset Latch

p. 342

- $\overline{S}$- $\overline{R}$ Latch using NAND:

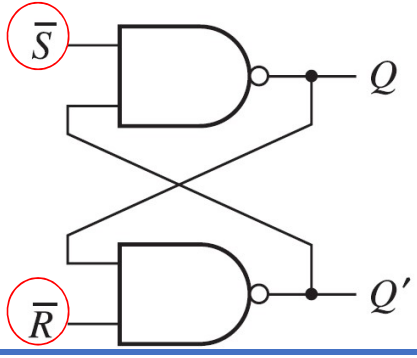

$\overline{S}$	$\overline{R}$	Q	Q^+	
1	1	0	0	
1	1	1	1	
1	0	0	0	
1	0	1	0	
0	1	0	1	
0	1	1	1	
0	0	0	–	不允許的輸入條件
0	0	1	–	

- **S-R Latch using NOR**

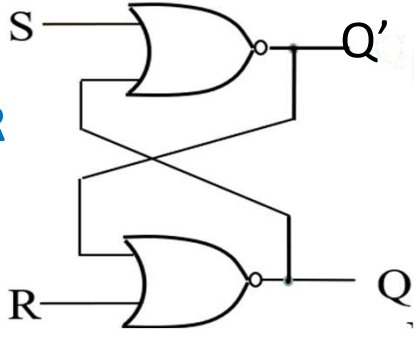

S	R	Q	Q^+	
0	0	0	0	
0	0	1	1	
0	1	0	0	
0	1	1	0	
1	0	0	1	
1	0	1	1	
1	1	0	–	不允許的輸入條件
1	1	1	–	

11.3 Gated Latches

p. 342

- Gated Latches:

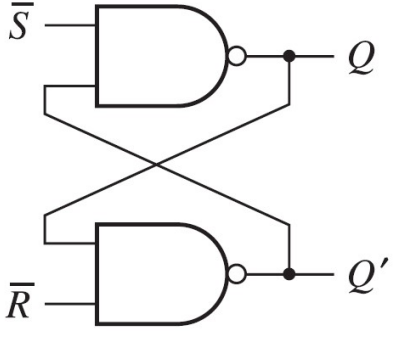

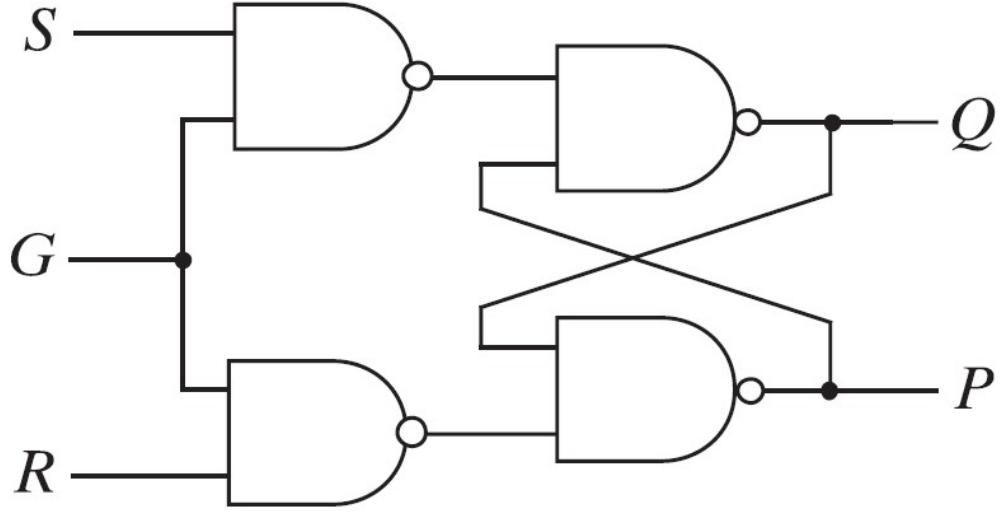

11.3 Gated Latches

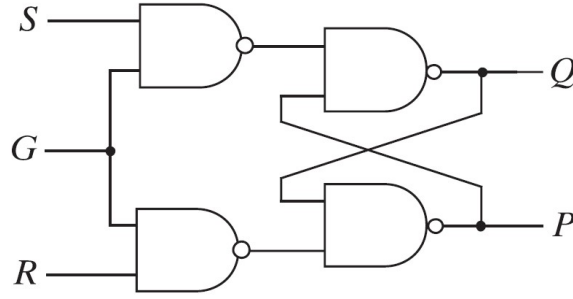

- Gated Latches:

次一狀態 Q^+

目前狀態 Q	$G=0$ SR 00	SR 01	SR 11	SR 10	$G=1$ SR 00	SR 01	SR 11	SR 10
0	0	0	0	0	0	0	1	1
1	1	1	1	1	1	0	1	1

目前輸出 P

目前狀態 Q	$G=0$ SR 00	SR 01	SR 11	SR 10	$G=1$ SR 00	SR 01	SR 11	SR 10
0	1	1	1	1	1	1	1	1
1	0	0	0	0	0	1	1	0

p. 343

11.3 Gated Latches

- Gated D Latches:

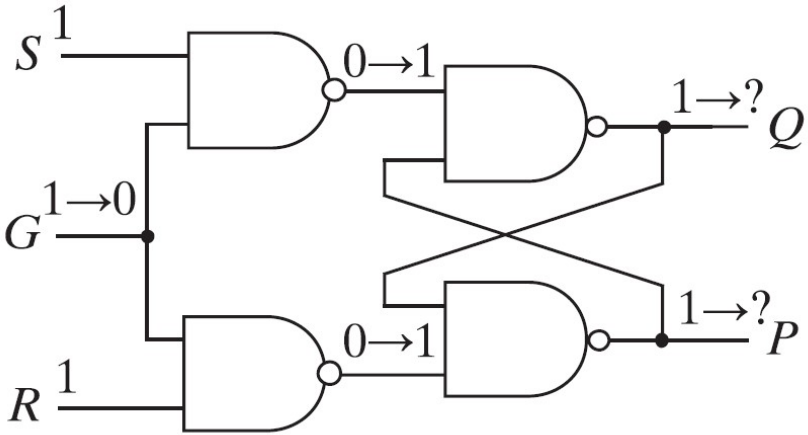

GQ \ SR	00	01	11	10
00	0	0	0	0
01	1	1	1	1
11	1	0	1	1
10	0	0	1	1

Q^+

p. 344

11.3 Gated Latches

- Gated D Latches:

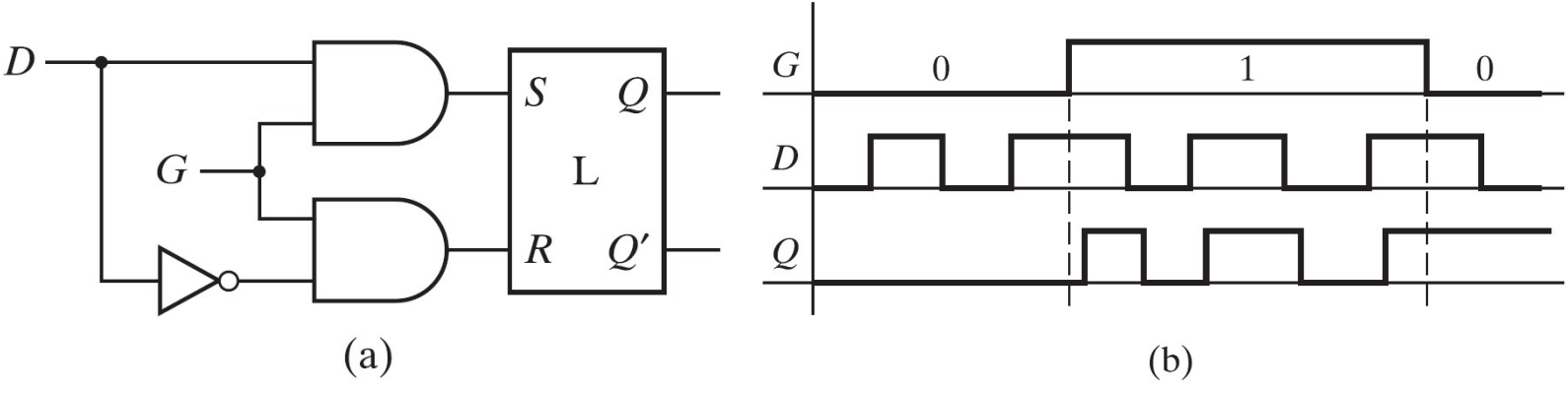

p. 344

11.3 Gated Latches

- Gated D Latches:

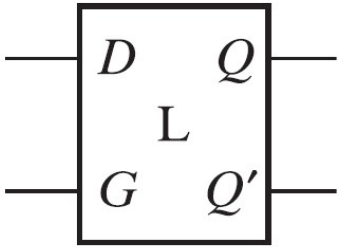

G	D	Q	Q^+
0	0	0	0
0	0	1	1
0	1	0	0
0	1	1	1
1	0	0	0
1	0	1	0
1	1	0	1
1	1	1	1

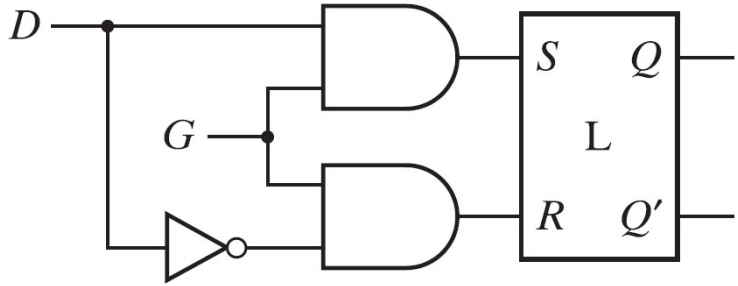

Q \ GD	00	01	11	10
0	0	0	1	0
1	1	1	1	0

$$Q^+ = G'Q + GD$$

p. 345

11.3 Gated Latches

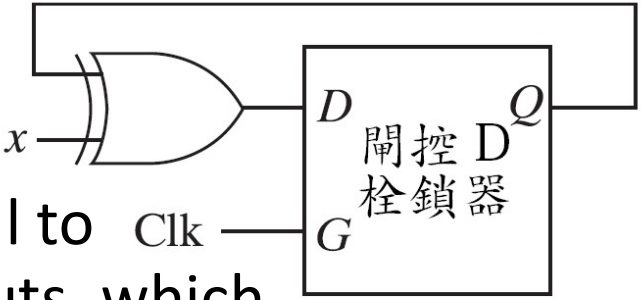

- Unreliable Gated D Latches:
- Digital systems use a clock signal to synchronize the change in outputs, which is actually very difficult.
- When Clk is 1, the next value of Q should be Q' when the input x=1 and Q as X=0.
- However, when Clk=1 and x=1, D=Q' causes Q to change and, if Clk remains 1, the change in Q will feed back and cause Q to change again; Q will oscillate.

(not stable)

p. 345

11.4 Edge-Triggered D Flip-flop

- Edge-triggered: If the inputs to the flip-flop only need to stable for a short period of time around the clock edge.
- Master-slave flip-flop: a particular implementation that uses two gated latches in such a way that the flip-flop outputs only change on a clock edge.
- Master-slave flip-flop is not necessary edge-triggered flip-flips. The edge-triggered D Flip-flop is an exception.

p. 346

11.4 Edge-Triggered D Flip-flop

p. 346

- The D flip flop has two inputs: D (data) and Ck (clock).

- **Rising-edge trigger**: the output can change in response to a 1 to 0 transition.
- **Falling-edge trigger**: the output can change in response to a 0 to 1 transition.

} **Active edges**

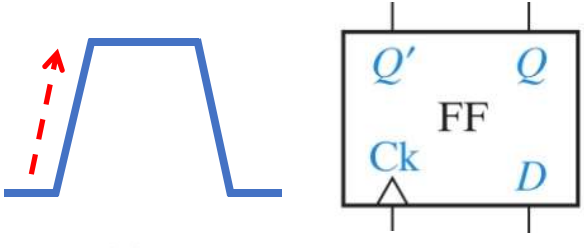

(a) Rising-edge trigger

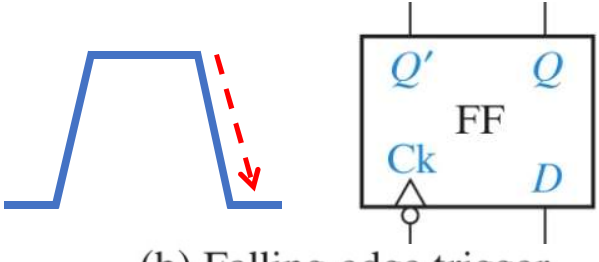

(b) Falling-edge trigger

11.4 Edge-Triggered D Flip-flop

p. 346

- The D flip flop output changes only in response to the clock, not to a change in D.
- The state of a D flipflop after the active clock edge (Q^+) is equal to the input (D) before the active edge. E.q., if D=1 before the clock pulse, Q^+=1, after the active edge, regardless of the previous value of Q.

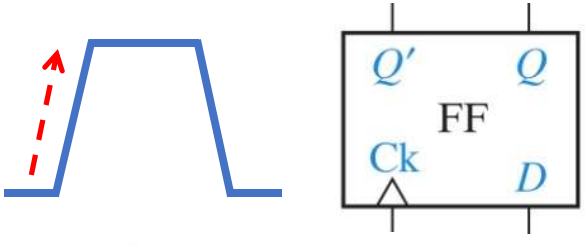

(a) Rising-edge trigger

D	Q	Q^+
0	0	0
0	1	0
1	0	1
1	1	1

$$\boxed{Q^+ = D}$$

This column is dependent on how you designed.

11.4 Edge-Triggered D Flip-flop

- E.q. Falling edge-triggered D flip-flop

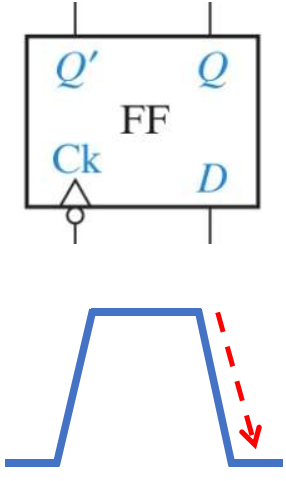

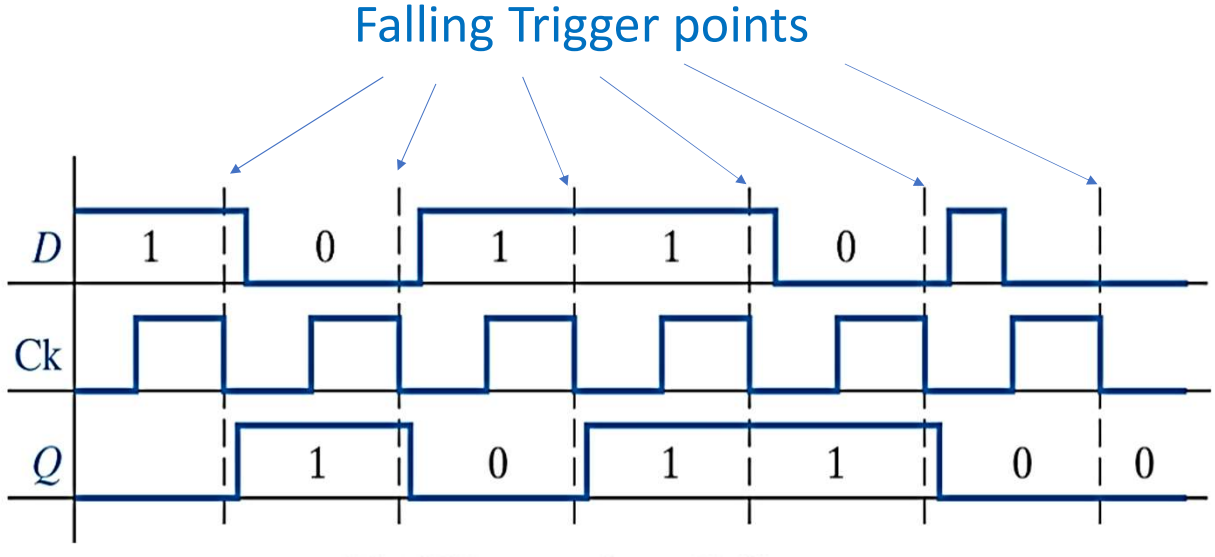

Falling-edge trigger

p. 346

11.4 Edge-Triggered D Flip-flop

- Implementation of Edge-triggered D Flip-flop using 2 Gated D Latch and one Invertor.

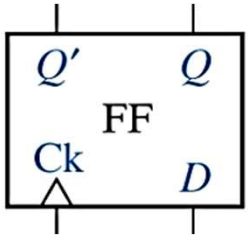

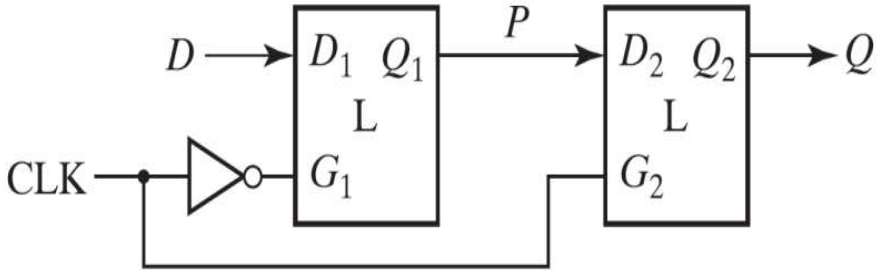

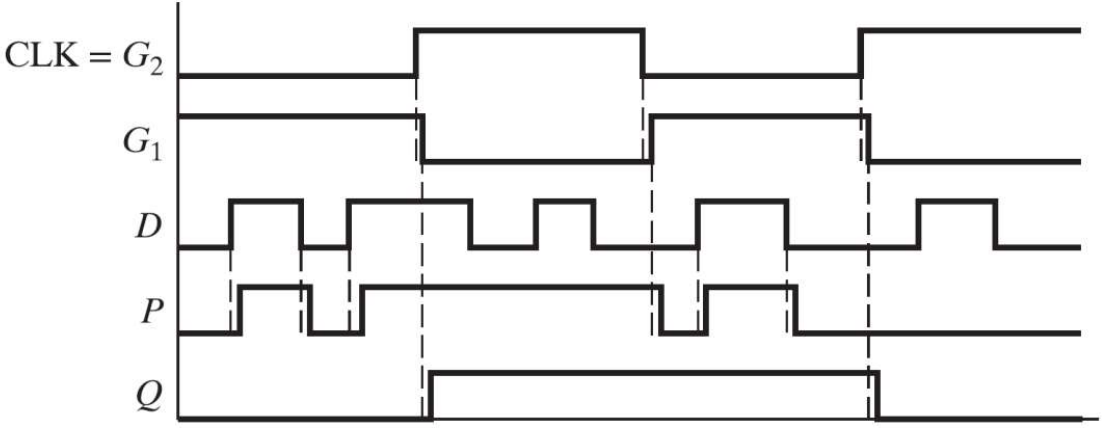

p. 347

11.4 Edge-Triggered D Flip-flop

- The propagation delay (t_d): because a flip-flop changes state only on the active edge of the clock, the propagation delay of a flip-flop is the time between the active edge of the clock and the resulting change in the output.
- To function properly, the D input to an edge-triggered flip-flop must be held at a constant value for a period of time before and after the active edge of the clock.

p. 347

11.4 Edge-Triggered D Flip-flop

p. 347

- The setup time (t_{su}) : The amount of time that D must be stable before the active edge.
- The hold time (t_h): the amount of time that D must hold the same value after the active edge.

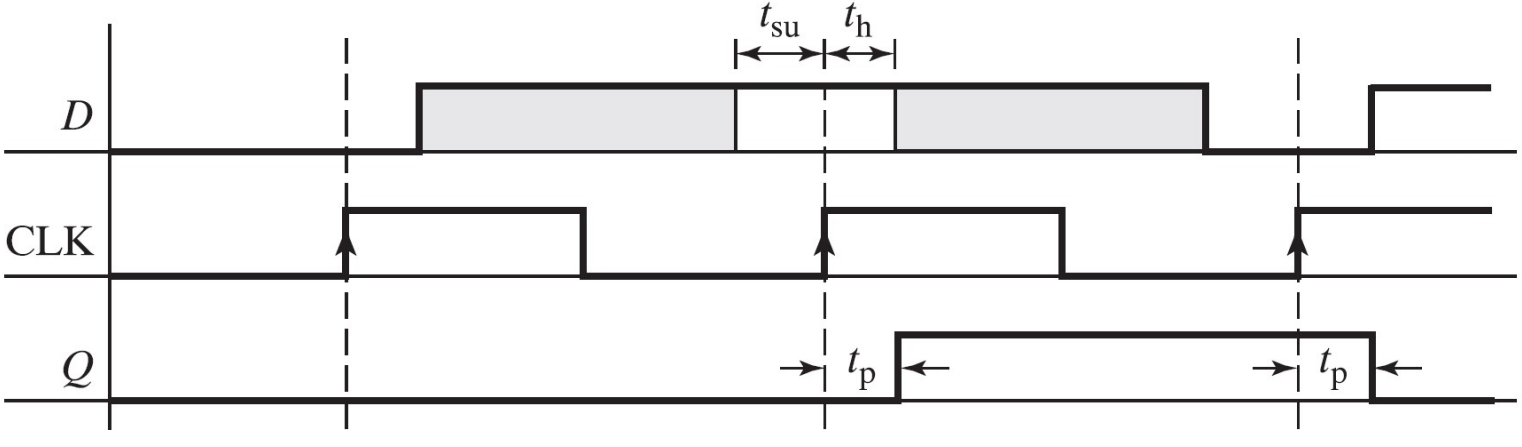

11.4 Edge-Triggered D Flip-flop

p. 348

- Minimum period of clock:

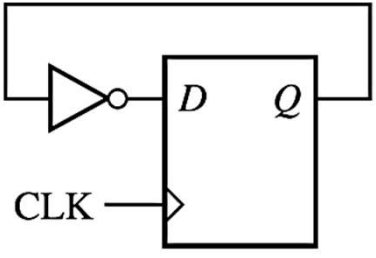

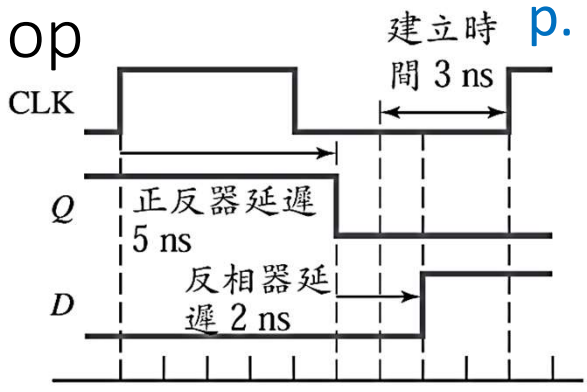

● Setup time not satisfied

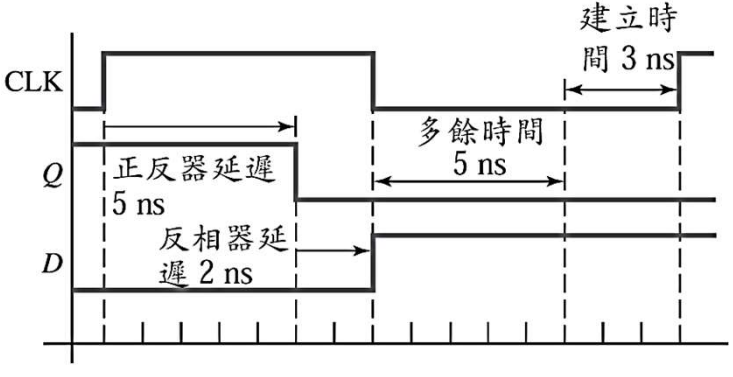

● Setup time satisfied

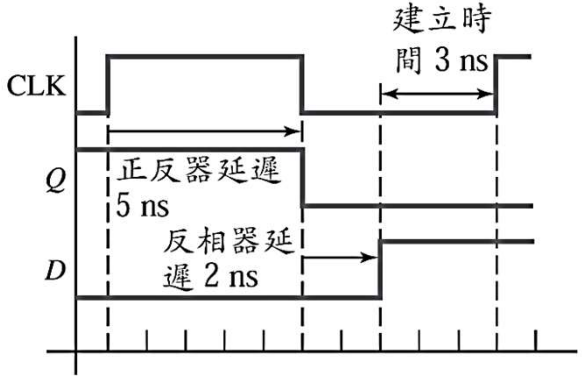

● Minimum clock period

11.5 S-R Flip-Flop

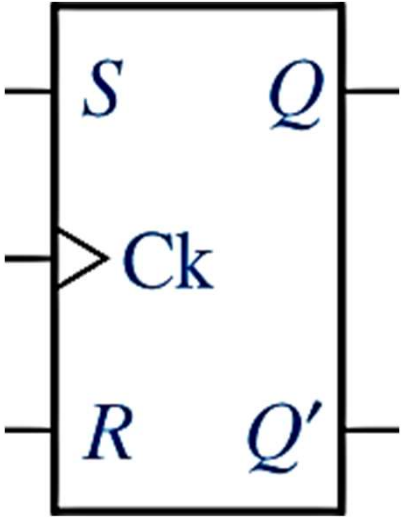

Operation summary:

$S = R = 0$ No state change

$S = 1, R = 0$ Set Q to 1 (after active Ck edge)

$S = 0, R = 1$ Reset Q to 0 (after active Ck edge)

$S = R = 1$ Not allowed

p. 349

11.5 S-R Flip-Flop

- Implementation of S-R Flip-flop

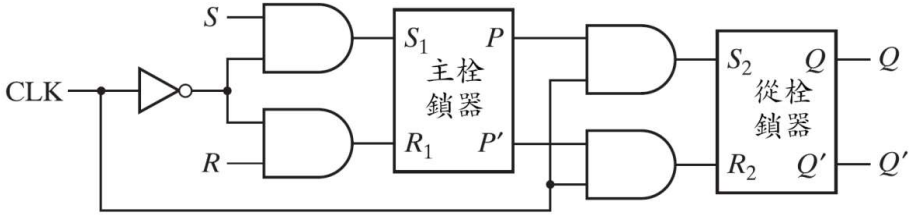

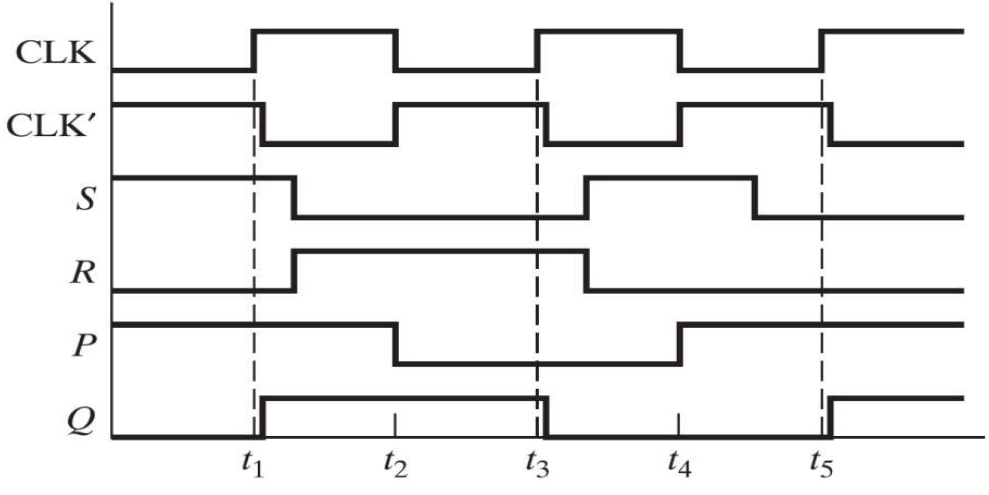

p. 349

p. 350

11.6 J-K Flip-Flop

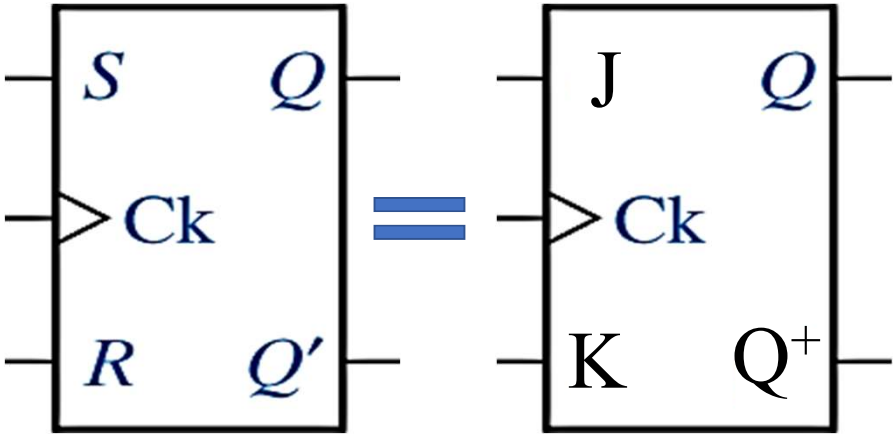

S-R

- 2 inputs: S & R
- 2 output: Q & Q’

J-K

- 3 inputs: J, K, Q
- 1 output: Q^+

J	K	Q	Q^+
0	0	0	0
0	0	1	1
0	1	0	0
0	1	1	1
1	0	0	1
1	0	1	1
1	1	0	1
1	1	1	0

$$\boxed{Q^+ = JQ' + K'Q}$$

p. 350

11.6 J-K Flip-Flop

- Implementation of J-K Flip-flop

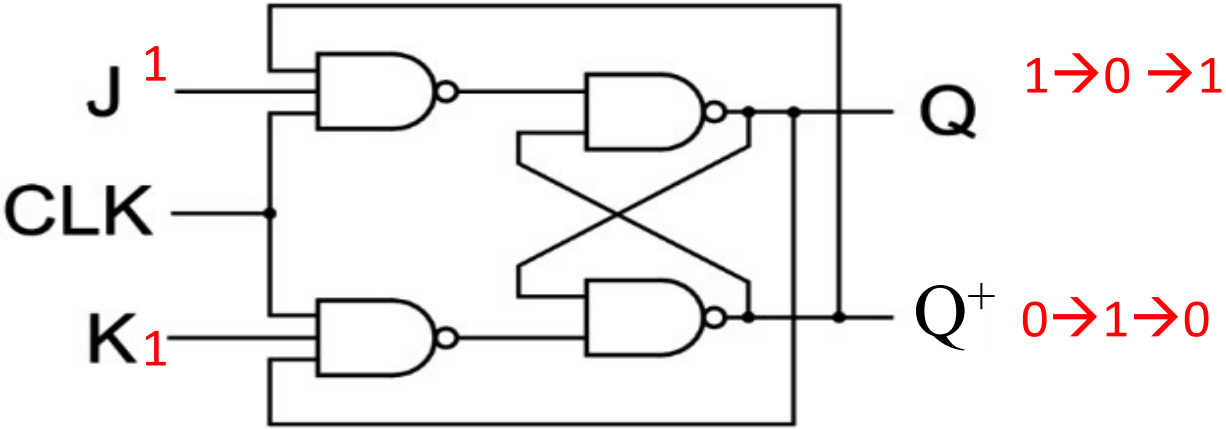

(Q changes on Rising Edge.)

J	K	Q	Q^+
0	0	0	0
0	0	1	1
0	1	0	0
0	1	1	1
1	0	0	1
1	0	1	1
1	1	0	1
1	1	1	0

Racing

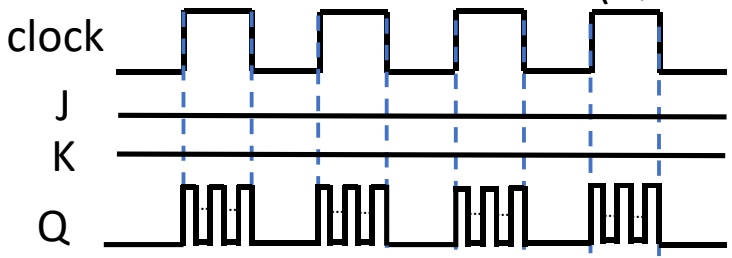

Toggling

$$Q^+ = JQ' + K'Q$$

p. 350

11.6 J-K Flip-Flop

- Implementation of J-K Flip-flop by Master-Slave S-R Latches

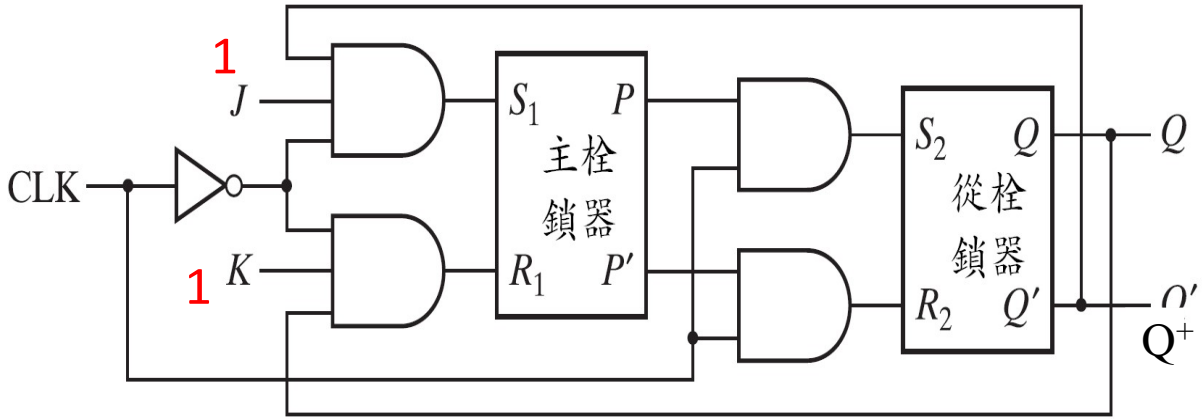

J	K	Q	Q^+
0	0	0	0
0	0	1	1
0	1	0	0
0	1	1	1
1	0	0	1
1	0	1	1
1	1	0	1
1	1	1	0

(Q changes on Rising Edge.)

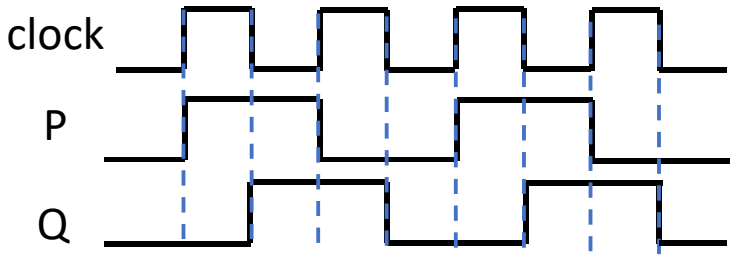

Toggling

p. 351

11.7 T Flip-Flop

- T Flip-flop: the toggle flip-flop, frequently used in building counter, has a T input and a clock input.
- When T= 1, the flip-flop changes state after the active edge of the clock.
- When T= 0, no state changes occurs after the active edge of the clock.

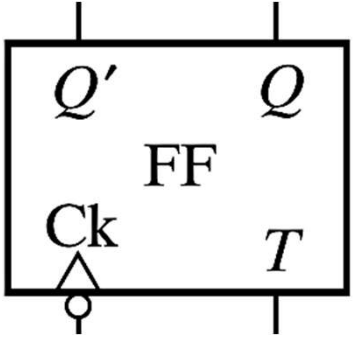

T	Q	Q^+
0	0	0
0	1	1
1	0	1
1	1	0

$$\boxed{Q^+ = T'Q + TQ' = T \oplus Q}$$

(XOR operation)

11.7 T Flip-Flop

- T Flip-flop: the toggle flip-flop, frequently used in building counter, has a T input and a clock input.
- When T= 1, the flip-flop changes state after the active edge of the clock.
- When T= 0, no state changes occurs after the active edge of the clock.

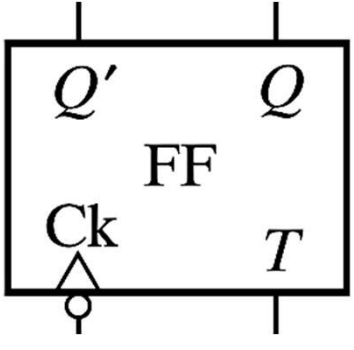

T	Q	Q^+
0	0	0
0	1	1
1	0	1
1	1	0

$$\boxed{Q^+ = T'Q + TQ' = T \oplus Q}$$

(XOR operation)

p. 352

11.7 T Flip-Flop

- Time diagram of T Flip-flop:

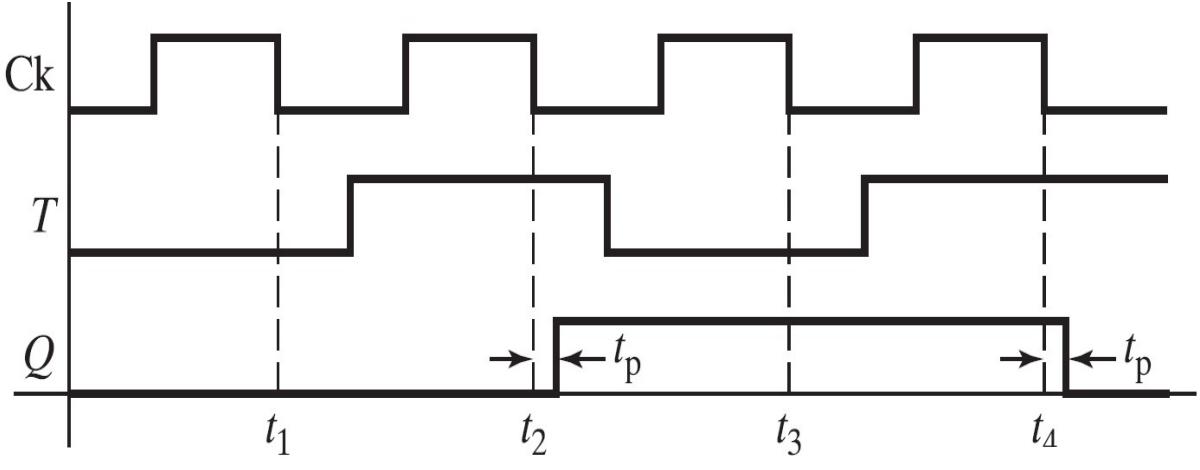

T	Q	Q^+
0	0	0
0	1	1
1	0	1
1	1	0

$$\boxed{Q^+ = T'Q + TQ' = T \oplus Q}$$

(XOR operation)

11.7 T Flip-Flop

- Implementation of T Flip-flop by J-K Flip-flop:

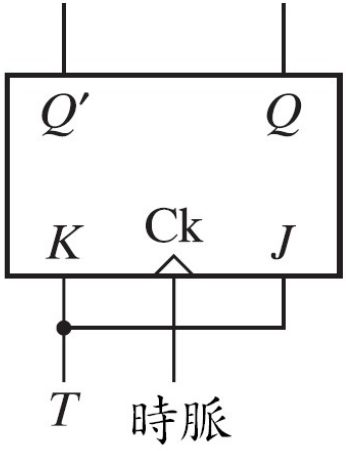

$J=K$	Q	Q^+
0	0	0
0	0	1
0	1	0
0	1	1
1	0	1
1	0	1
1	1	0
1	1	1

T	Q	Q^+
0	0	0
0	1	1
1	0	1
1	1	0

11.7 T Flip-Flop

- Implementation of D Flip-flop and XOR:

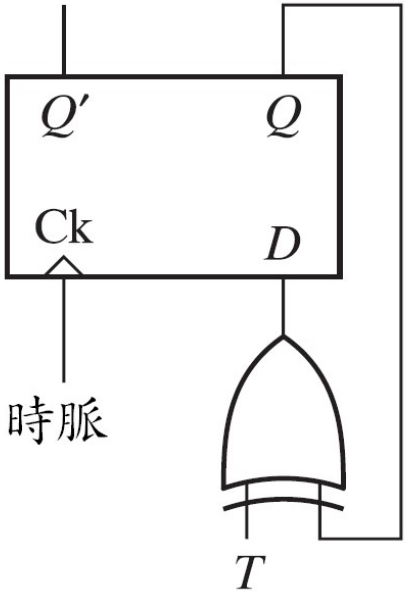

T	Q	T ⊕ Q	D	Q+
0	0	0	0	0
0	1	1	1	1
1	0	1	1	1
1	1	0	0	0

D	Q	Q^+
0	0	0
0	1	0
1	0	1
1	1	1