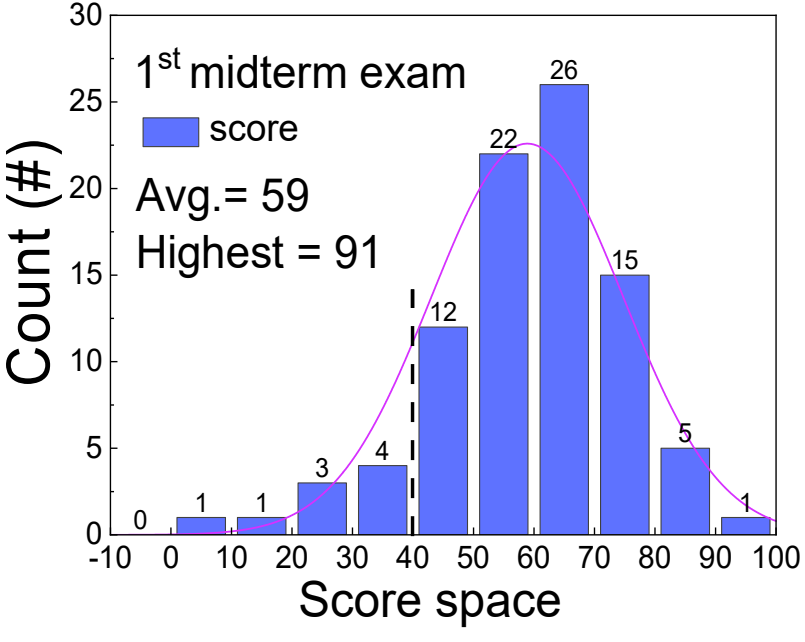
1st midterm exam
score
Avg.= 59
Highest = 91
Count (#)
Score space
0
1
1
3
4
12
22
26
15
5
1

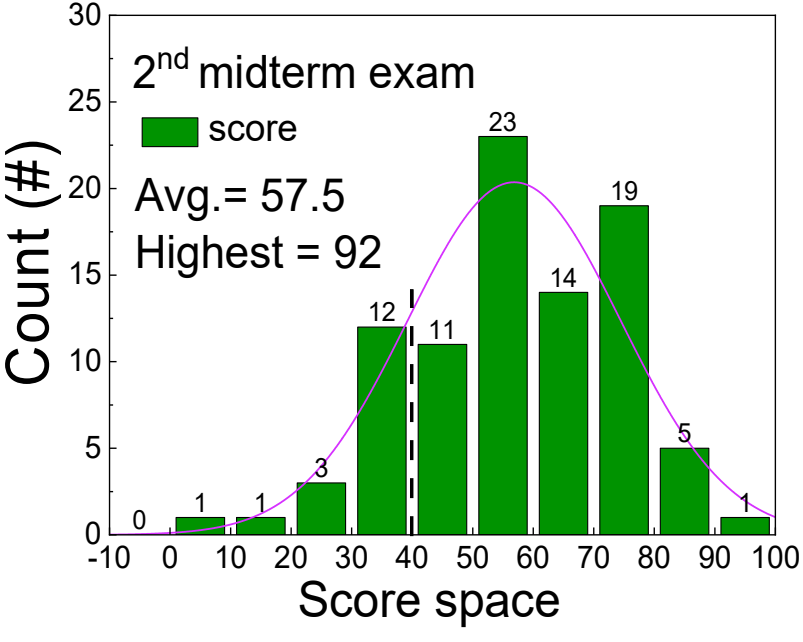
2nd midterm exam
score
Avg.= 57.5
Highest = 92
Count (#)
Score space
0
1
1
3
12
11
23
14
19
5
1

EE2016-B- Fall 2021

數位系統導論

Fundamentals of Logic Design-Chapter 13: Analysis of Clocked Sequential Circuits

Prof. E Ray Hsieh 謝易叡 助理教授

13.1 A Sequential Parity Checker (1)

p.419

- When binary data is transmitted or stored, an extra bit (called a parity bit) is frequently added for purposes of error detection.
- When the total number of 1 bit in the block (including the parity bit) is odd, we say that the parity is odd.

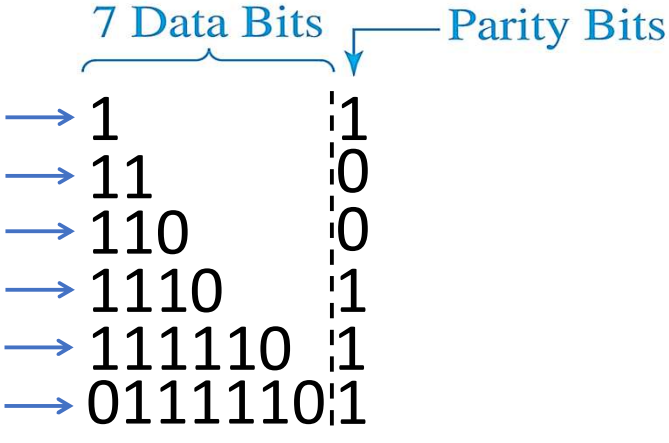

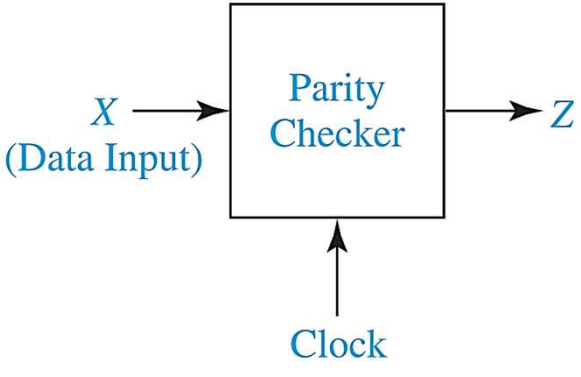

13.1 A Sequential Parity Checker (2)

p.419

- When a sequence of 0's and 1's is applied to the X input, the output of the circuit should be Z = 1 if the total number of 1 inputs received is odd; that is, the output should be 1 if the input parity is odd.
- Thus, if data which originally had odd parity is transmitted to the circuit, a final output of Z = 0 indicates that an error in transmission has occurred.

7 Data Bits	Parity Bits
1	1
11	0
110	0
1110	1
111110	1
0111110	1

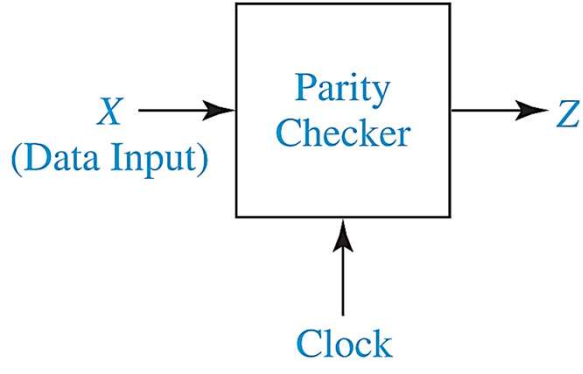

13.1 A Sequential Parity Checker (3)

p.420

- When a sequence of 0's and 1's is applied to the X input, the output of the circuit should be Z = 1 if the total number of 1 inputs received is odd; that is, the output should be 1 if the input parity is odd.
- Thus, if data which originally had odd parity is transmitted to the circuit, a final output of Z = 0 indicates that an error in transmission has occurred.

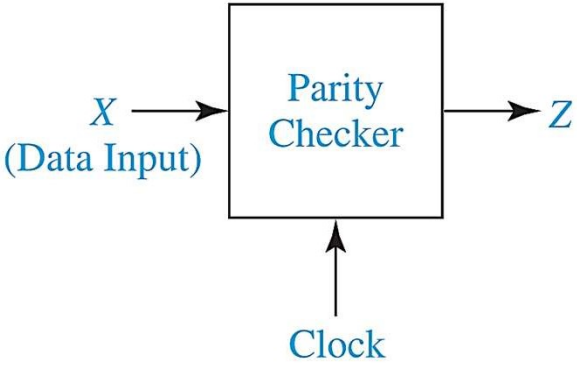

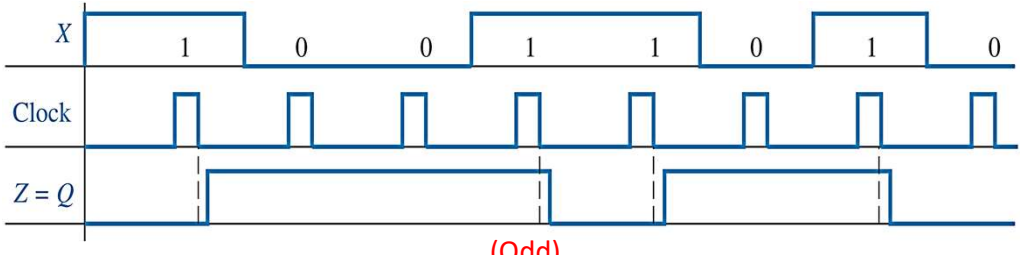

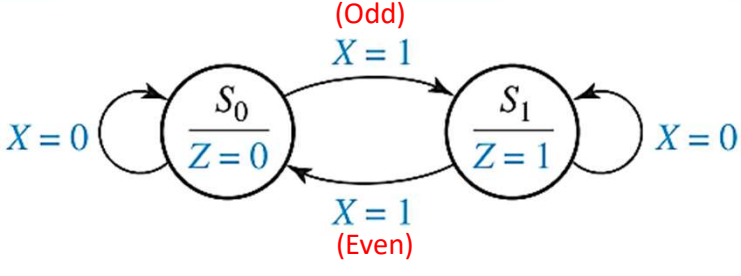

13.1 A Sequential Parity Checker (4)

p.421

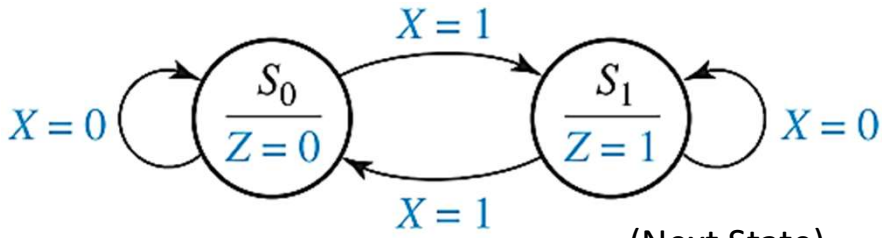

Q	Q^+	T
0	0	0
0	1	1
1	0	1
1	1	0

Present State	Next State $X = 0$	Next State $X = 1$	Present Output
S_0	S_0	S_1	0
S_1	S_1	S_0	1

	(Next State)		(Flip Flop)		
	Q^+		T		
Q	$X = 0$	$X = 1$	$X = 0$	$X = 1$	Z
0	0	1	0	1	0
1	1	0	0	1	1

自己選擇的

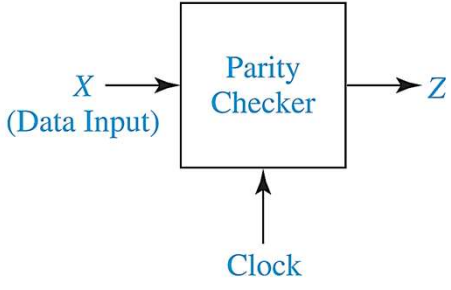

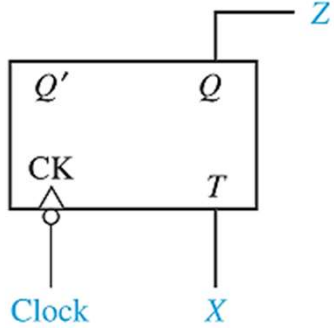

13.2 Analysis by Signal Tracing and Timing Charts (1)

- We will analyze clocked sequential circuits to find the output sequence resulting from a given input sequence by tracing 0 and 1 signals through the circuit.
  - **The basic procedure is as follows:**

1. Assume an **initial state** of the flip-flops

   (**all flip-flops reset to 0** unless otherwise specified).

2. For the first input in the given sequence, determine the circuit output(s) and flip-flop inputs.
3. Determine the **new** set of flip-flop states after **the next** active clock edge.
4. Determine the output(s) that corresponds to the new states.

p.421

13.2 Analysis by Signal Tracing and Timing Charts (2)

- Two types of clocked sequential circuits will be considered:
  - 1. **Moore machine:** the output depends only on **the present state of the flipflops.**

→ the output of a sequential circuit is a function of **the present state only**; the state graph for a Moore machine has **the output associated with the state**.

  - 2. **Mealy machine:** The output depends on both **the present state of the flipflops** and **on the value of the circuit inputs.**

→ the output is a function of both **the present state and the input**; the state graph for a Mealy machine has **the output associated with the arrow going between states**.

p.421

13.2 Analysis by Signal Tracing and Timing Charts (3)

- An example of a **Moore circuit**: p.422
- Using an input sequence X = 01101.
- The initial state is A = B = 0, and all state changes occur after the rising edge of the clock.
- Because Z is a function only of the present state (in this case, Z = A ⊕ B) the output will only change when the state changes.
- Initially, X = 0, so D_A = 1 and D_B = 0,and the state will change to A = 1 and B = 0 after the first rising clock edge.

$X = (0)\ 1\ 1\ 0\ 1$

$A = (0)\ 1\ 0\ 1\ 0\ 1$

$B = (0)\ 0\ 1\ 1\ 1\ 1$

$Z = (0)\ 1\ 1\ 0\ 1\ 0$

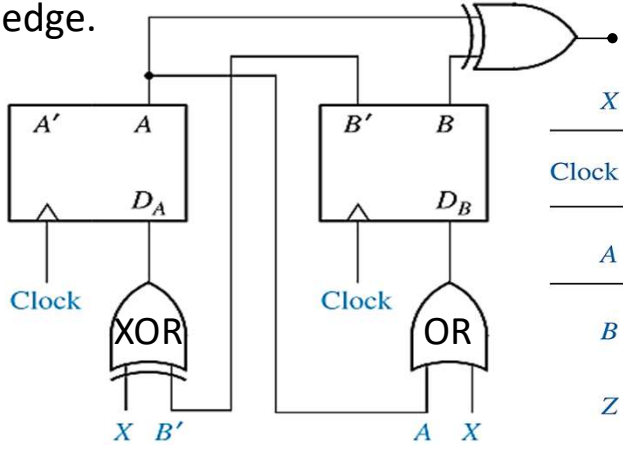

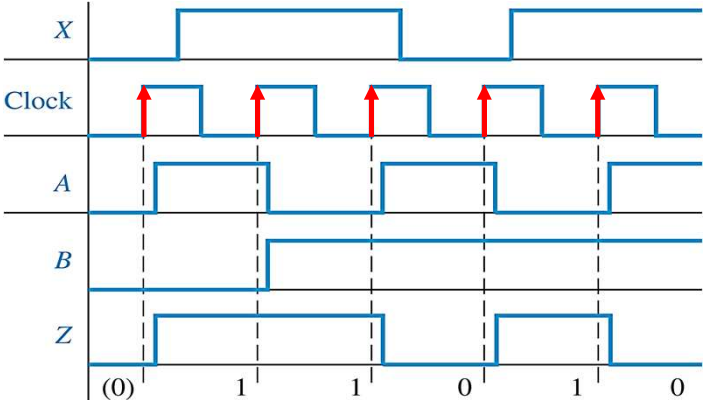

13.2 Analysis by Signal Tracing and Timing Charts (5)

p.422

- Then X → 1, so $D_A = 0$, $D_B = 1$ and AB = 01 after 2nd rising clock edge. The initial state is A = B = 0, and all state changes occur after the rising edge of the clock.
- After the state change, X remains 1, so $D_A = D_B = 1$, and 3rd rising edge causes the state → 11.
- When X → 0, D_A=0 and D_B=1, and the state → AB=01 on 4th rising edge.
- Then, with X = 1, $D_A = D_B = 1$, so 5th rising clock edge causes the state → AB = 11.

$X = 0\ 1\ 1\ 0\ 1$

$A = 0\ 1\ 0\ 1\ 0\ 1$

$B = 0\ 0\ 1\ 1\ 1\ 1$

$Z = (0)\ 1\ 1\ 0\ 1\ 0$

XOR OR

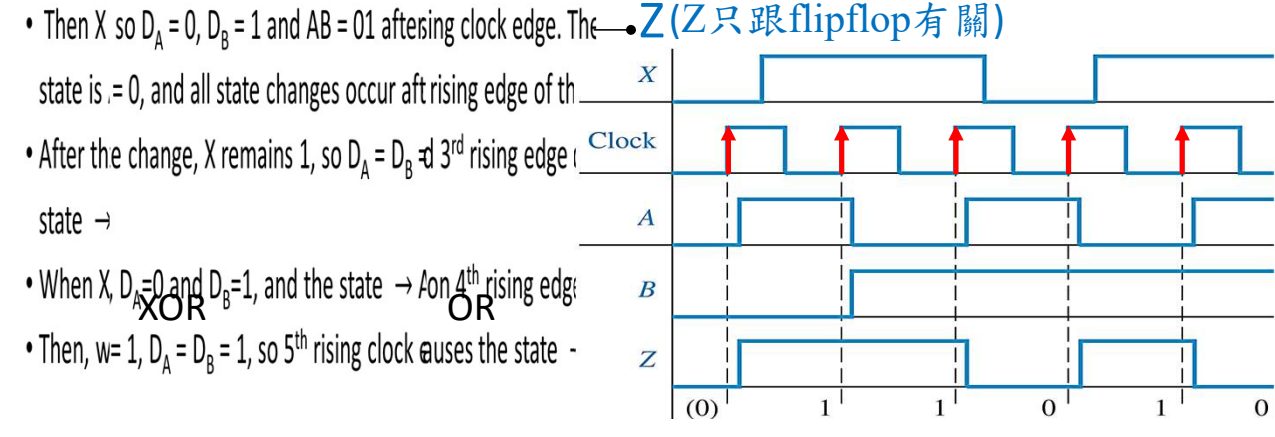

13.2 Analysis by Signal Tracing and Timing Charts (6)

- An example of a **Moore circuit**: p.423
- Note that for the Moore circuit, the output which results from application of a given input does not appear until after the active clock edge; therefore, the output sequence is displaced in time with respect to the input sequence.

$X = 0\ 1\ 1\ 0\ 1$

$A = 0\ 1\ 0\ 1\ 0\ 1$

$B = 0\ 0\ 1\ 1\ 1\ 1$

$Z = (0)\ 1\ 1\ 0\ 1\ 0$

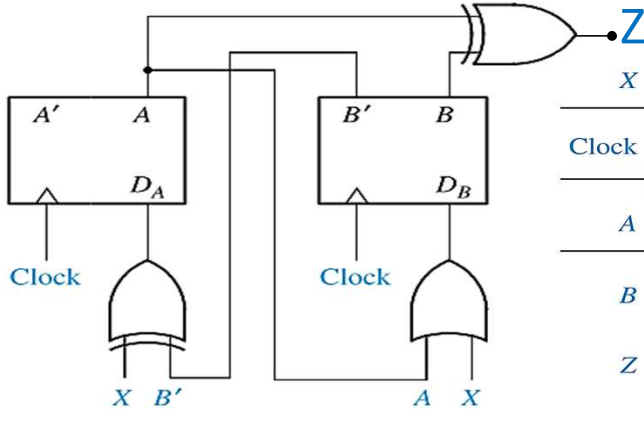

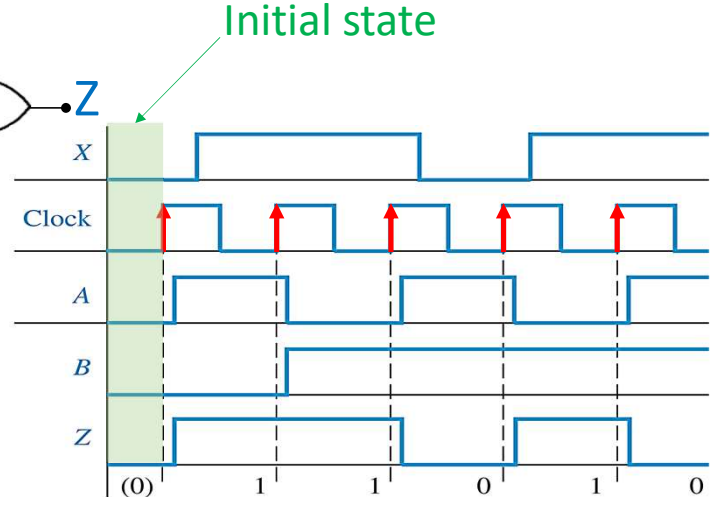

13.2 Analysis by Signal Tracing and Timing Charts (7)

- An example of a **Mealy circuit**: p.423
- The input is synchronized with the clock so that input changes occur after the falling edge.
- The output depends on both the input (X) and the flip-flop states (A & B), so Z may change either when the input changes or when the flip-flops change state.

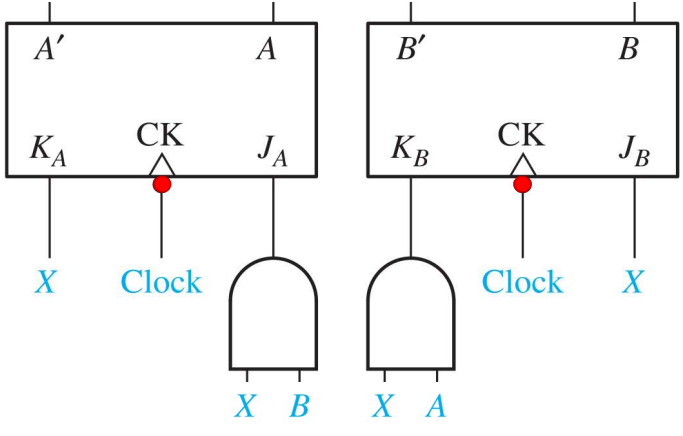

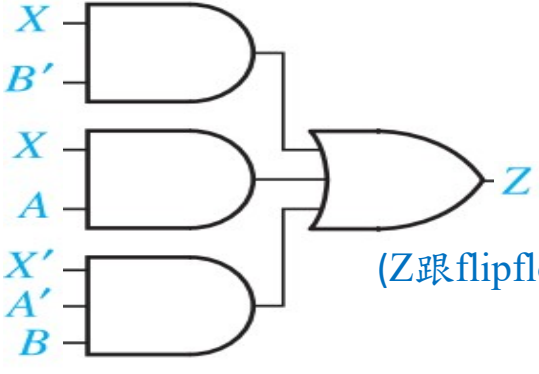

(Z跟flipflop和inputs有 關)

13.2 Analysis by Signal Tracing and Timing Charts (8)

p.424

- The flip-flop states are A = 0, B = 0. If X = 1, the output is Z = 1 and J_B = K_A = 1.
- After the falling edge of 1st clock pulse, B →1 so Z → 0. If the input → X = 0, Z → 1. All flip-flop inputs → 0.

J	K	Q	Q^+
0	0	0	0
0	0	1	1
0	1	0	0
0	1	1	1
1	0	0	1
1	0	1	1
1	1	0	1
1	1	1	0

$X = 1 \quad 0 \quad 1 \quad 0 \; 1$

$A = 0 \quad 0 \quad 0 \quad 1 \; 1 \; 0$

$B = 0 \quad 1 \quad 1 \quad 1 \; 1 \; 0$

$Z = 1(0) \; 1 \; 0(1) \; 0 \; 1$

Initial state

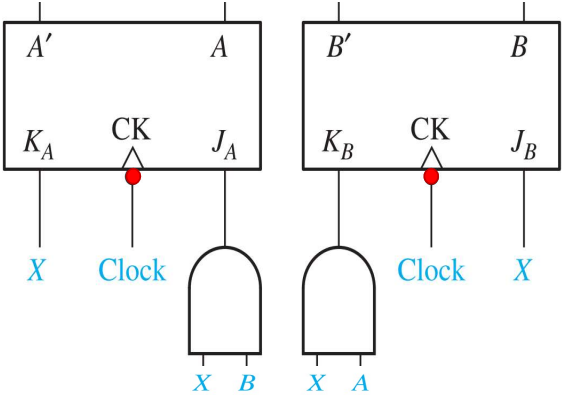

- T flip-flop stse A = 0, B
  If= 1, the ouutZ = 1 and
  K= 1.
- ler the fallirec of 1st cloc
  pse, B →1 so→ If the inpu
) 0, Z → 1. Aflilop inputs

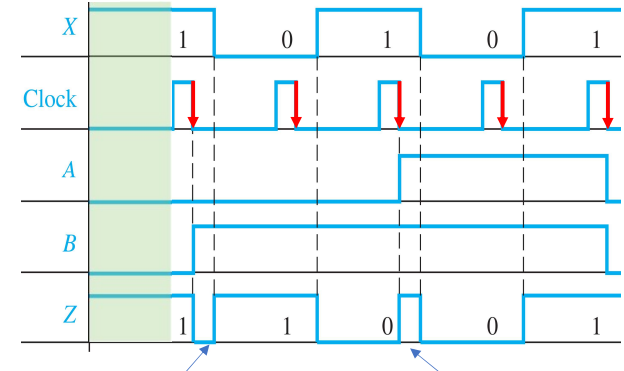

"False" 0 output

"False" 1 output

13.2 Analysis by Signal Tracing and Timing Charts (9)

p.424

- The flip-flop states are A = 0, B = 0. If X = 1, the output is Z = 1 and $J_B = K_A = 1$.
- When X → 1, Z → 0 and $J_A = K_A = J_B = 1$. A → 1.

$X = 1$	0	1	0	1	
$A = 0$	0	0	1	1	0
$B = 0$	1	1	1	1	0
$Z = 1(0)$	1	0(1)	0	1	

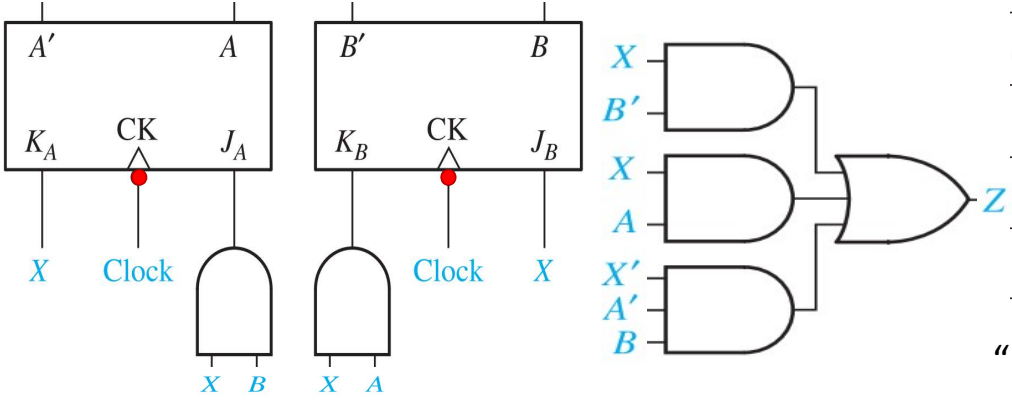

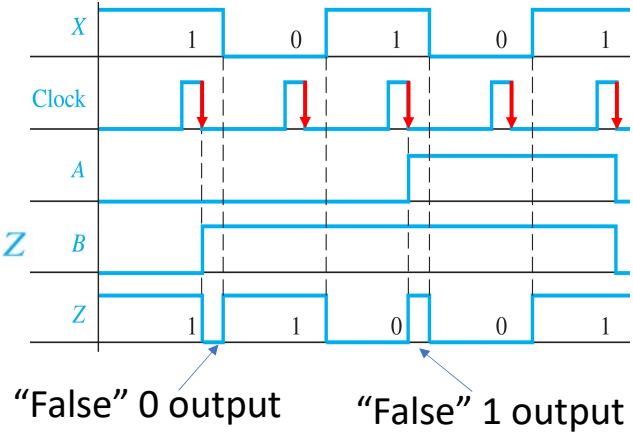

13.2 Analysis by Signal Tracing and Timing Charts (10)

p.424

- Next, X $\rightarrow$ 0 so Z $\rightarrow$ 0, and no state change occurs with 4th clock pulse. Then, X $\rightarrow$ 1, and Z $\rightarrow$ 1.
- Because $J_A=K_A=J_B=K_B=1$, 5th clock pulse returns the circuit to the initial state.

$X=1$	0	1	0	1
$A=0$	0	0	1	1 0
$B=0$	1	1	1	1 0
$Z=1(0)$	1	0(1)	0	1

(False outputs are indicated in parentheses.)

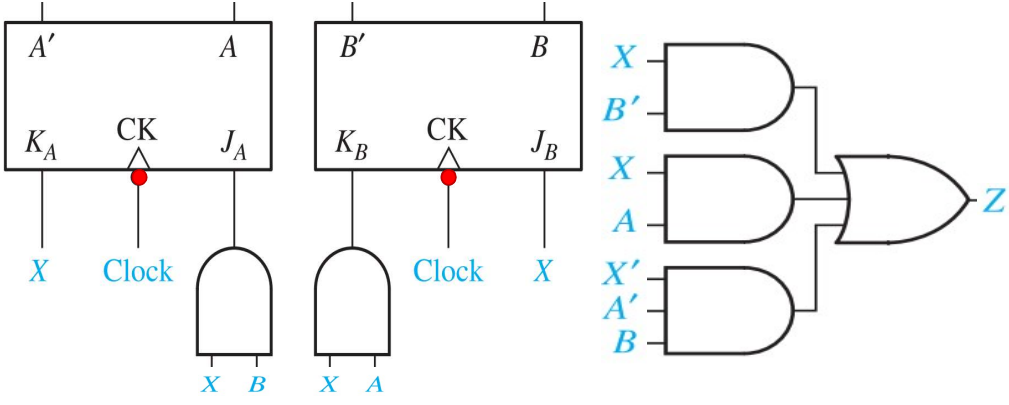

13.2 Analysis by Signal Tracing and Timing Charts (11)

p.424

- A careful interpretation of the output waveform (Z) of the Mealy circuit is necessary.
- After the circuit has changed state and before the input is changed, the output may temporarily assume an incorrect value, which we call **a false output. (glitch)**

$X = 1$	0	1	0	1	
$A = 0$	0	0	1	1	0
$B = 0$	1	1	1	1	0
$Z = 1(0)$	1	0(1)	0	1	

(False outputs are indicated in parentheses.)

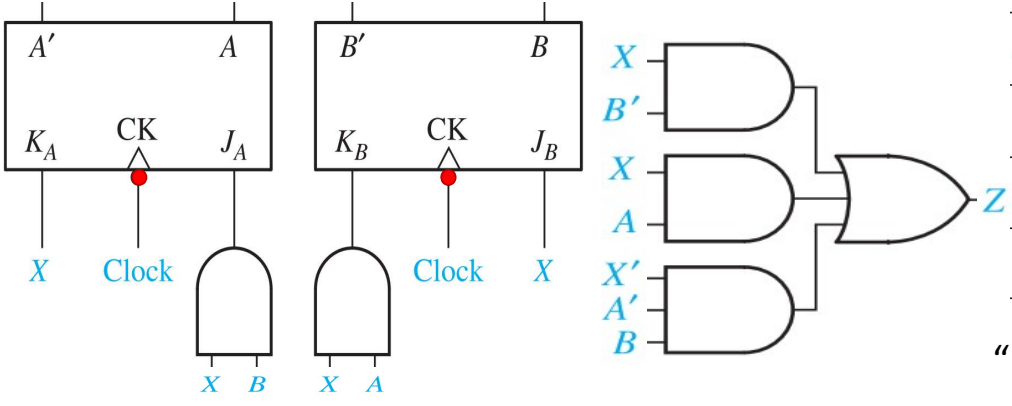

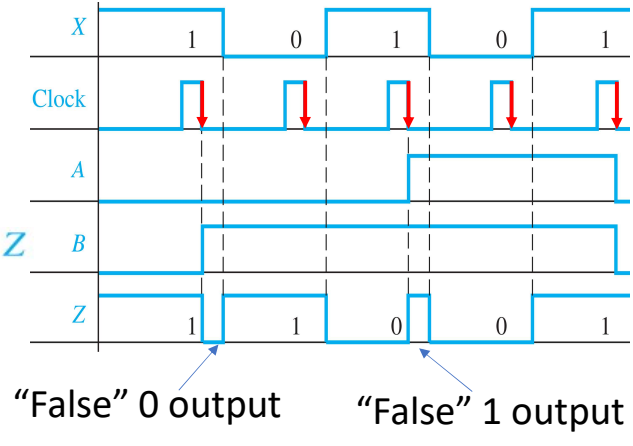

13.2 Analysis by Signal Tracing and Timing Charts (12)

p.424

- The output from a Mealy circuit is only of interest immediately preceding the active clock edge, and extra output changes (false outputs) which might occur between active clock edges should be ignored.

$X = 1$	0	1	0	1	
$A = 0$	0	0	1	1	0
$B = 0$	1	1	1	1	0
$Z = 1(0)$	1	0(1)	0	1	

(False outputs are indicated in parentheses.)

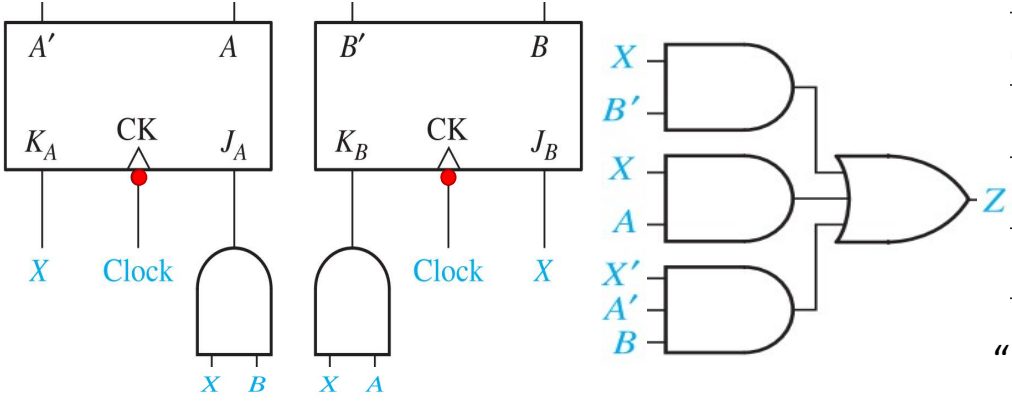

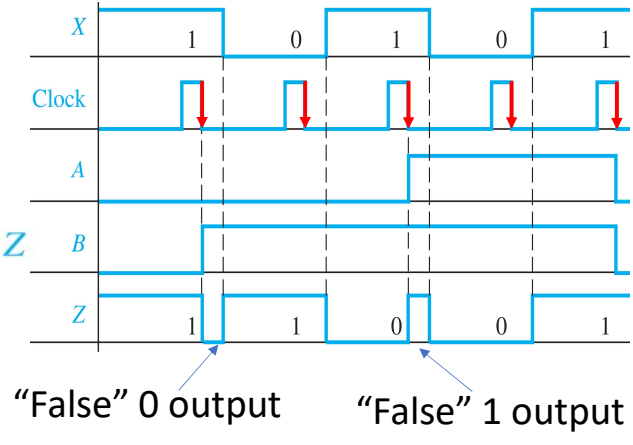

13.3 State Tables and Graphs

p.425

- **State tables and graphs** provide a more systematic approach which is useful for the analysis of larger circuits and which leads to a general synthesis procedure for sequential circuits.
- **The state table** specifies the next state and output of a sequential circuit in terms of its present state and input.

13.3 State Tables and Graphs

p.425

- The following method can be used to construct the state table:

1. Determine the flip-flop input equations and the output equations from the circuit.
2. Derive the next-state equation for each flip-flop from its input equations, using one of the following relations:

D flip-flop	$Q^+ = D$	(13-1)
D-CE flip-flop	$Q^+ = D \cdot CE + Q \cdot CE'$	(13-2)
T flip-flop	$Q^+ = T \oplus Q$	(13-3)
S-R flip-flop	$Q^+ = S + R'Q$	(13-4)
J-K flip-flop	$Q^+ = JQ' + K'Q$	(13-5)

3. Plot a next-state map for each flip-flop.
4. Combine these maps to form the state table. Such a state table, which gives the next state of the flip-flops as a function of their present state and the circuit inputs, is frequently referred to as a transition table.

13.3 State Tables and Graphs (1)

p.424

- An example:

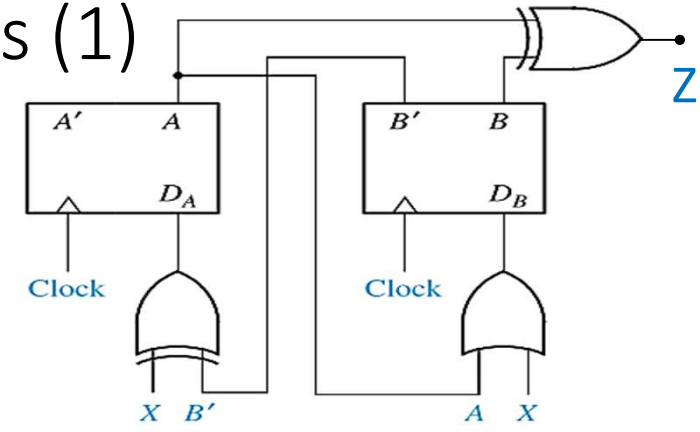

1. The flip-flop input equations and output equation are

$$D_A = X \oplus B' \qquad D_B = X + A \qquad Z = A \oplus B$$

2. The next-state equations for the flip-flops are

$$A^+ = X \oplus B' \qquad B^+ = X + A$$

3. The corresponding maps are

AB \ X	0	1
00	1	0
01	0	1
11	0	1
10	1	0

A^+

AB \ X	0	1
00	0	1
01	0	1
11	1	1
10	1	1

B^+

p.426

4. Combining these maps yields the transition table:

$$Z = A \oplus B$$

	A^+B^+		
AB	X = 0	X = 1	Z
00	10	01	0
01	00	11	1
11	01	11	0
10	11	01	1

Present State	Next State X = 0	Next State X = 1	Present Output (Z)
S_0	S_3	S_1	0
S_1	S_0	S_2	1
S_2	S_1	S_2	0
S_3	S_2	S_1	1

p.426

13.3 State Tables and Graphs (2)

- Initially AB = 00 and X=0, so Z = 0 and A^+B^+ = 10.
- This means that after the rising clock edge, the flip-flop state will be AB = 10.
- Then, with AB = 10, the output is Z = 1. The next input is X = 1, so A^+B^+ = 01 and the state will change after the next rising clock edge. Continuing in this manner, we can complete the timing chart.

	A^+B^+		
AB	$X = 0$	$X = 1$	Z
00	10	01	0
01	00	11	1
11	01	11	0
10	11	01	1

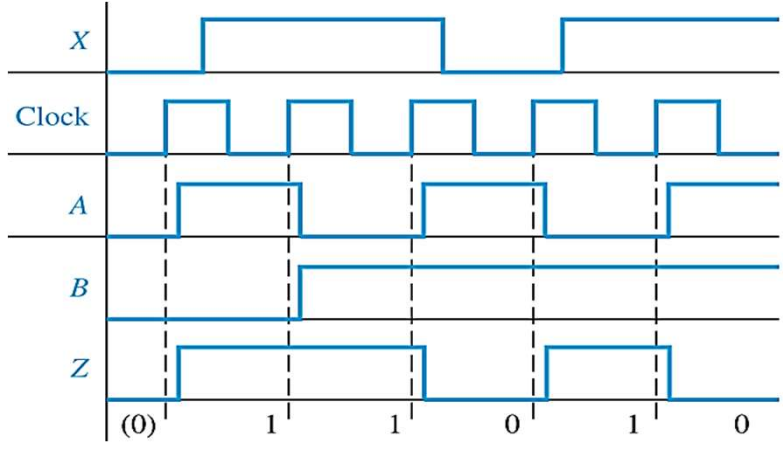

p.427

13.3 State Tables and Graphs (3)

- The Z column is labeled Present Output because it is the output associated with the Present State.
- Each node of the graph represents a state of the circuit, and the corresponding output is placed in the circle below the state symbol.
- The arc joining two nodes is labeled with the value of X which will cause a state change between these nodes. Thus, if the circuit is in state S_0 and X = 1, a clock edge will cause a transition to state S_1 .

Present State	Next State $X = 0$	Next State $X = 1$	Present Output (Z)
S_0	S_3	S_1	0
S_1	S_0	S_2	1
S_2	S_1	S_2	0
S_3	S_2	S_1	1

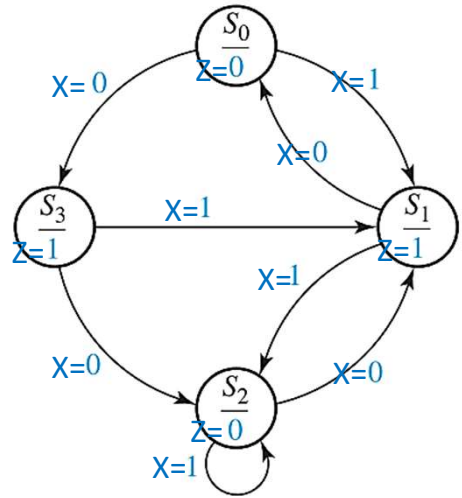

13.3 State Tables and Graphs (4)

- An example of a **Mealy circuit**:
  - The next-state and output equations are

$$A^+ = J_A A' + K'_A A = XBA' + X'A$$

$$B^+ = J_B B' + K'_B B = XB' + (AX)'B = XB' + X'B + A'B$$

$$Z = X'A'B + XB' + XA$$

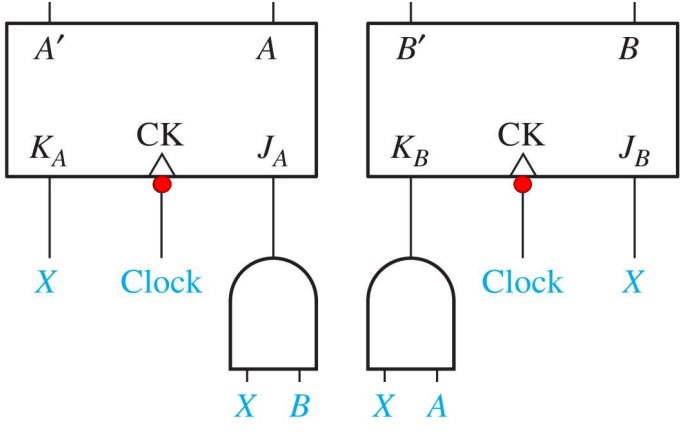

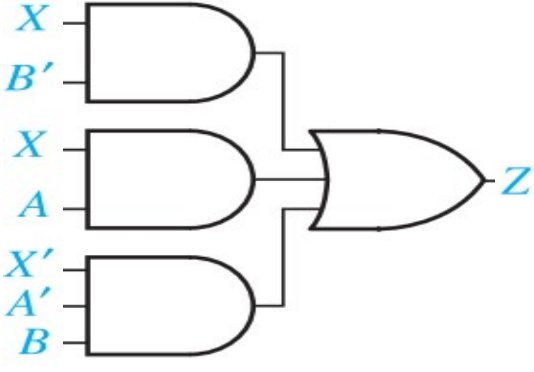

13.3 State Tables and Graphs (5)

- An example of a **Mealy circuit**:
  - The next-state and output equations are

$$A^+ = J_A A' + K'_A A = XBA' + X'A$$

$$B^+ = J_B B' + K'_B B = XB' + (AX)'B = XB' + X'B + A'B$$

$$Z = X'A'B + XB' + XA$$

AB \ X	0	1
00	0	0
01	0	1
11	1	0
10	1	0

A^+

AB \ X	0	1
00	0	1
01	1	1
11	1	0
10	0	1

B^+

AB \ X	0	1
00	0	1
01	1	0
11	0	1
10	0	1

Z

AB	A^+B^+ X = 0	1	Z X = 0	1
00	00	01	0	1
01	01	11	1	0
11	11	00	0	1
10	10	01	0	1

Present State	Next State X = 0	1	Present Output X = 0	1
S_0	S_0	S_1	0	1
S_1	S_1	S_2	1	0
S_2	S_2	S_0	0	1
S_3	S_3	S_1	0	1

p.428

13.3 State Tables and Graphs (5)

- An example of a **Mealy circuit**:
- AB = 00 to S_0 , 01 to S_1 , 11 to S_2 , and 10 to S_3.
- the Present Output gives the output with the present state and present input.
- If the present state is S_0 and the input changes from 0 to 1, the output will immediately change from 0 to 1.
- However, the state will not change to the next state (S_1) until after the clock pulse.

Present State	Next State $X = 0$	Next State 1	Z Present Output $X = 0$	Z Present Output 1
S_0	S_0	S_1	0	1
S_1	S_1	S_2	1	0
S_2	S_2	S_0	0	1
S_3	S_3	S_1	0	1

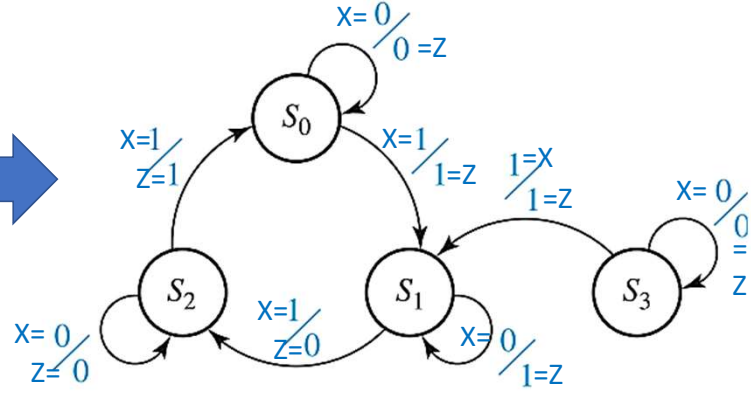

p.429

13.3 State Tables and Graphs (5)

- An example of a serial adder :
  - The binary numbers are fed in serially, one pair of bits at a time.
  - The sum is read out serially.
  - x_0 & y_0 are fed in; a sum digit s_0 is generated, and the carry c_1 is stored.
  - At the next clock time, x_1 & y_1 are fed in and added to c_1 to give the next sum digit s_1 and the new carry c_2 , which is stored.

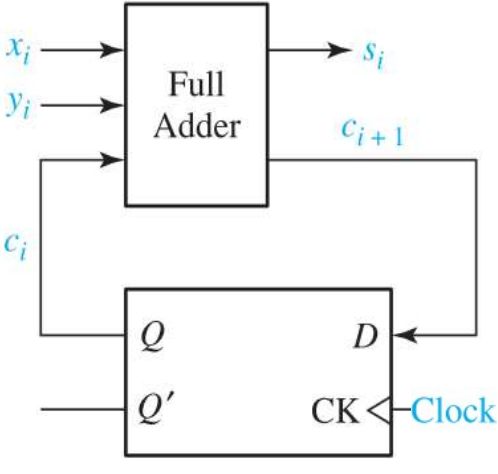

x_i	y_i	c_i	c_{i+1}	s_i
0	0	0	0	0
0	0	1	0	1
0	1	0	0	1
0	1	1	1	0
1	0	0	0	1
1	0	1	1	0
1	1	0	1	0
1	1	1	1	1

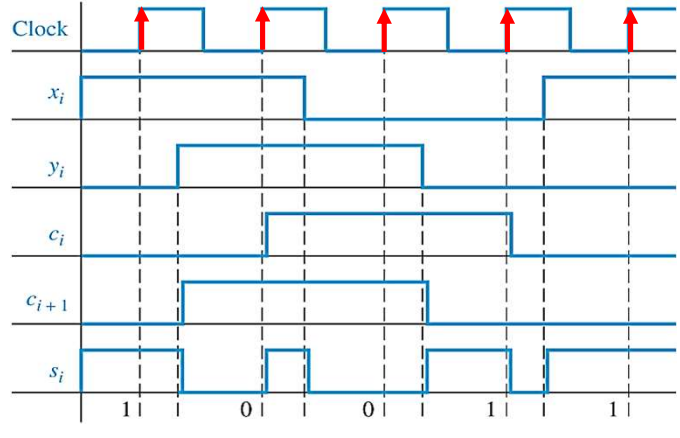

(add 10011 + 00110 =11001 with a carry of 0)

13.3 State Tables and Graphs (6)

$C_0=0=S_0$	X	Y	Z	C_{nxt}
$S_0=0$	0	0	0	0 (S_0)
	0	1	1	0 (S_0)
	1	0	1	0 (S_0)
	1	1	0	1 (S_1)

$C_1=1=S_1$	X	Y	Z	C_{nxt}
$S_1=1$	0	0	1	0 (S_0)
	0	1	0	1 (S_1)
	1	0	0	1 (S_1)
	1	1	1	1 (S_1)

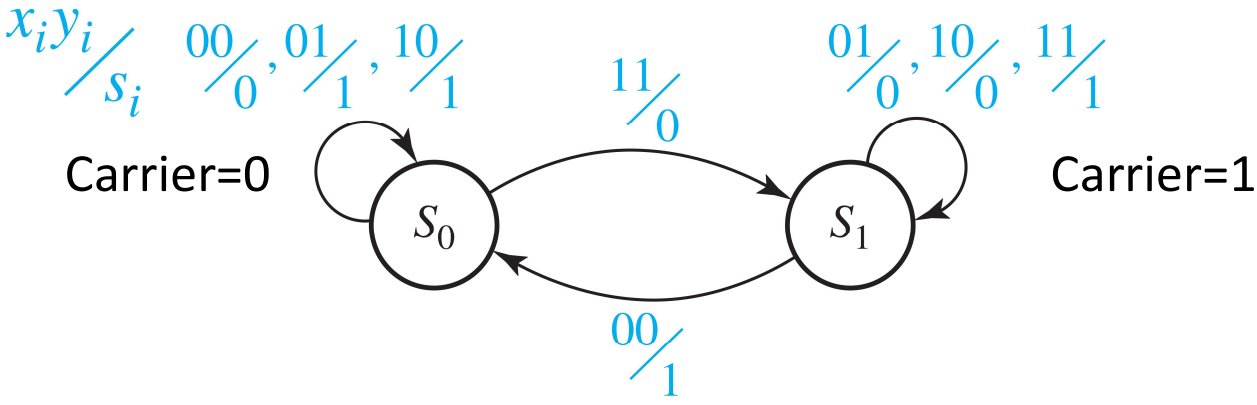

p.430

13.3 State Tables and Graphs (7)

- Construction and Interpretation of Timing Charts:

1. When constructing timing charts, note that a state change can only occur after the rising (or falling) edge of the clock, depending on the type of flip-flop.
2. The input will normally be stable immediately before and after the active clock edge.
3. For a Moore circuit, the output can change only when the state changes.
4. For a Mealy circuit, the output can change when the input changes as well as when the state changes.
5. If the state has changed to its next value, but the old input is still present, the output may be temporarily incorrect.
6. False outputs are difficult to determine from the state graph, so use either signal tracing through the circuit or use the state table when constructing timing charts for Mealy circuits.

13.3 State Tables and Graphs (8)

- Construction and Interpretation of Timing Charts:

1. When using a Mealy state table for constructing timing charts, the procedure is as follows:
   (a) For the first input, read the present output and plot it.
   (b) Read the next state and plot it (following the active edge of the clock pulse).
   (c) Go to the row in the table which corresponds to the next state and read the output under the old input column and plot it. (This may be a false output.)
   (d) Change to the next input and repeat steps (a), (b), and (c).

2. For Mealy circuits, the best time to read the output is just **before the active** edge of the clock, because the output should always be correct at that time.

p.431

13.3 State Tables and Graphs (9)

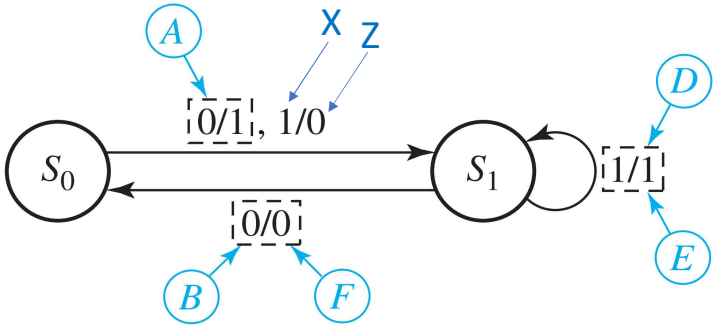

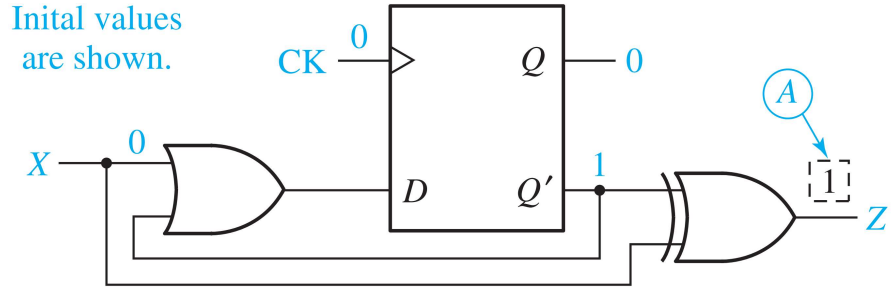

Q		$X = 0$	X=1	X = 0	X = 1
0	S_0	S_1	S_1	1	0
1	S_1	S_0	S_1	0	1

A D E B F
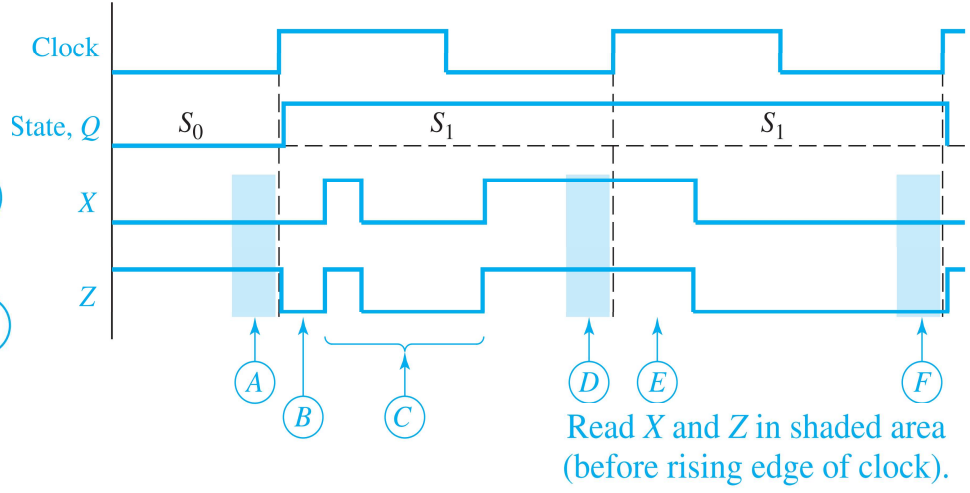
Z