EE2016-B- Fall 2021

數位系統導論

Fundamentals of Logic Design-Chapter 2: Boolean Algebra

Prof. E Ray Hsieh 謝易叡 助理教授

2.1 Introduction (p36)

- **Boolean algebra** is a basic mathematical tool for studying the logical design of digital systems. George Boole played Boolean algebra in 1847 to solve mathematically logical problems.
- Boolean algebra is used in many ways, including Set theory and mathematical logic, but this book is limited to its application in switching circuits.

2.1 Introduction (p37)

- We will use **Boolean** variables, such as X or Y, to represent the input or output of the switching circuit, assuming that these variables can only take one of two different values. The symbols "0" and "1" are used to represent these two different values. Therefore, if X is a **Boolean** (swap) variable, then X is 0 or X is 1.

2.1 Introduction (p37)

- The symbols 0 and 1 applied to **Boolean** algebra are not numeric values. They represent **two states** of the logic circuit, and are two values of an exchange variable.
- In the logic gate circuit, the symbol **0** (generally) corresponds to **a low voltage**, and the symbol **1** corresponds to **a high voltage**.
- In the **switching circuit**, the symbol **0** (usually) represents the switch **open** and the symbol **1** represents the **closed** circuit.
- In general, in any binary digital system, 0 and 1 are used to represent both states.

2.2 Basic Operations (p37)

- The basic operations for **Boolean** algebra or exchange algebra are AND, OR, and complement (or inverse).
- **Complement:**

0’=1 and 1’=0

X’=1 if X=0 and X’=0 if X=1

- **Invertor:**

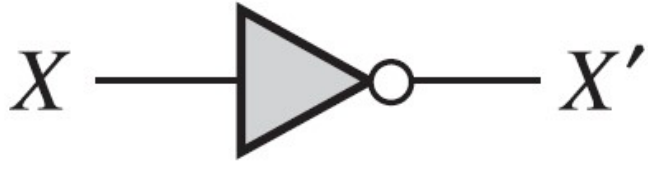

2.2 Basic Operations (p37)

Truth Table

A	B	$C = A \cdot B$
0	0	0
0	1	0
1	0	0
1	1	1

- The function defined by **the truth table** on the left is called AND, written in algebraic form as $C = A \cdot B$ ◦ The symbol " · " is often omitted so they are usually written as AB rather than $A \cdot B$ ◦
- AND operations are also known as logical (**Boolean**) multiplication.

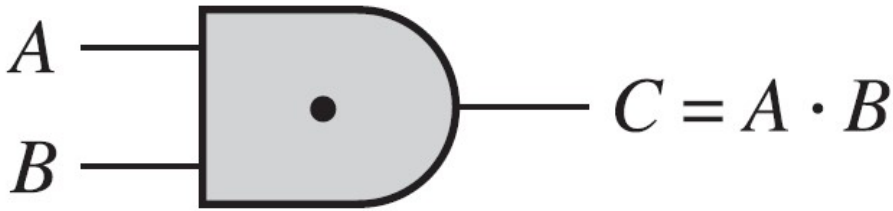

2.3 Boolean Expressions and Truth Table (p39)

- Computation Order of Boolean Expression:

Parenthesis () → complement ‘→ AND → OR

2.3 Boolean Expressions and Truth Table (p40)

- Each algebraic formula corresponds directly to a logic gate circuit:

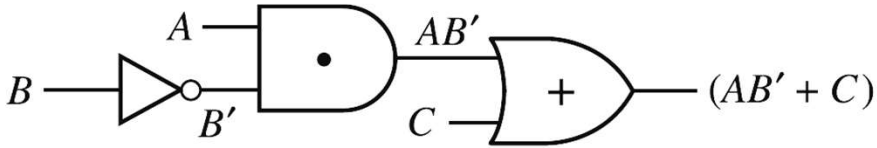

(a)

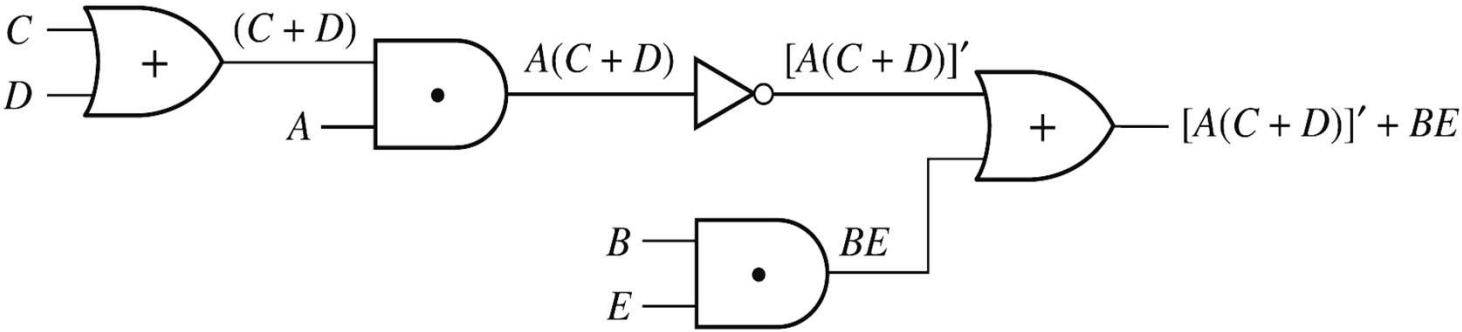

(b)

2.3 Truth Table (p40)

- $F = A' + B$

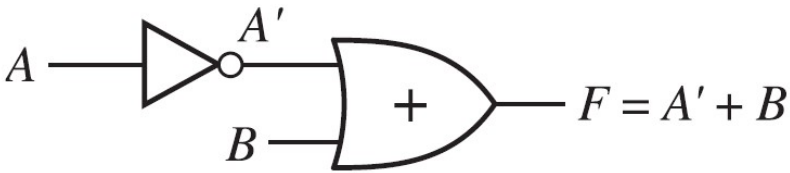

(a)

(b)

A	B	A'	$F = A' + B$
0	0	1	1
0	1	1	1
1	0	0	0
1	1	0	1

2.3 Truth Table (p 41)

- $AB' + C = (A + C)(B' + C)$ (2-3)

3 variables

A	B	C	B'	AB'	$AB' + C$	$A + C$	$B' + C$	$(A + C)(B' + C)$
0	0	0	1	0	0	0	1	0
0	0	1	1	0	1	1	1	1
0	1	0	0	0	0	0	0	0
0	1	1	0	0	1	1	1	1
1	0	0	1	1	1	1	1	1
1	0	1	1	1	1	1	1	1
1	1	0	0	0	0	1	0	0
1	1	1	0	0	1	1	1	1

2.4 Basic Theorems (p 41)

- Computing with Bit "0" and "1": 0: Logic Low (L) ; 1: Logic High (H);

$$X + 0 = X \quad (2\text{-}4) \qquad X \cdot 1 = X \quad (2\text{-}4\text{D})$$

$$\boxed{X + 1 = 1} \quad (2\text{-}5) \qquad X \cdot 0 = 0 \quad (2\text{-}5\text{D})$$

二次元世界只有 "嗨" (High) 沒有 "更嗨" (Even Higher)!!

- Idempotent laws (同體律)

$$\boxed{X + X = X} \quad (2\text{-}6) \qquad X \cdot X = X \quad (2\text{-}6\text{D})$$

2.4 Basic Theorems (p 42)

- Involution laws (摺疊律):

$$(X')' = X \qquad (2\text{-}7)$$

- Laws of complementarity (互補律)

$$X + X' = 1 \qquad (2-8)$$

$$X \cdot X' = 0 \qquad (2-8\mathrm{D})$$

2.5 Commutative, Associative, Distributive, DeMorgan's Law

- Commutative laws (交換律): (p 43)

$$XY = YX \qquad (2-9)$$

$$X + Y = Y + X \qquad (2-9\mathrm{D})$$

- Associative Laws (結合律)

$$(XY)Z = X(YZ) = XYZ \qquad (2-10)$$

$$(X + Y) + Z = X + (Y + Z) = X + Y + Z \qquad (2-10\mathrm{D})$$

2.5 Commutative, Associative, Distributive, DeMorgan's Law

(p 44)

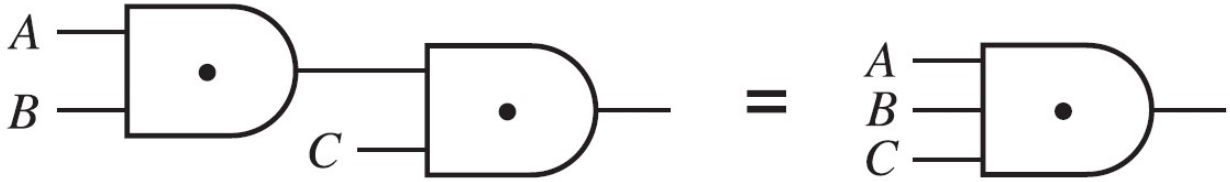

$$(AB)C = ABC$$

(a)

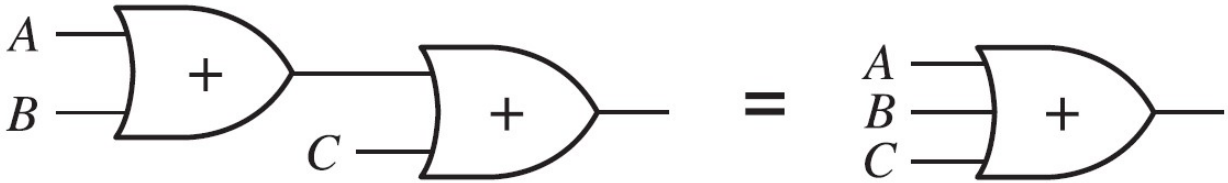

$$(A + B) + C = A + B + C$$

(b)

2.5 Commutative, Associative, Distributive, DeMorgan's Law

(p 45)

- Distributive Law:

$$X(Y+Z) = XY + XZ \qquad (2-11)$$

$$X + YZ = (X+Y)(X+Z) \qquad (2-11\mathrm{D})$$

2.5 Commutative, Associative, Distributive, DeMorgan's Law

(p 45)

- The Second Distributive Law: *(frequently used)*

$$\boxed{(X+Y)(X+Z)} = X(X+Z)+Y(X+Z) = XX+XZ+YX+YZ$$

（由 (2-11) 式）

$$= X+XZ+XY+YZ = X\cdot 1+XZ+XY+YZ$$

（由 (2-6D) 式和 (2-4D) 式）

$$= X(1+\boxed{Z+Y})+YZ = X\cdot 1+YZ = \boxed{X+YZ}$$

（由 (2-11) 式、(2-5) 式和 (2-4D) 式）

$\boxed{(X+Y)(X+Z)} = X+YZ$

Redundant Variable (邏輯1+任何變數最後結果一定還是邏輯1。)

2.5 Commutative, Associative, Distributive, DeMorgan's Law

(p 45)

- DeMorgan's Law:

$$(X+Y)'=X'Y'; \qquad (XY)'=(X'+Y')$$

X	Y	X'	Y'	X+Y	(X+Y)'	X'+Y'	XY	(XY)'	X'Y'
0	0	1	1	0	1	1	0	1	1
0	1	1	0	1	0	1	0	1	0
1	0	0	1	1	0	1	0	1	0
1	1	0	0	1	0	0	1	0	0

2.5 Commutative, Associative, Distributive, DeMorgan's Law

(p 46)

0 和 1 的運算：

1. $X+0=X$ 　　1D. $X\cdot 1=X$

2. $X+1=1$ 　　2D. $X\cdot 0=0$

同體律（idempotent laws）：

3. $X+X=X$ 　　3D. $X\cdot X=X$

摺疊律（involution laws）：

4. $(X)'=X$

互補律（laws of complementarity）：

5. $X+X'=1$ 　　5D. $X\cdot X'=0$

交換律（commutative laws）：

6. $X+Y=Y+X$ 　　6D. $XY=YX$

結合律（associative laws）：

7. $(X+Y)+Z=X+(Y+Z)$ 　　7D. $(XY)Z=X(YZ)=XYZ$

$=X+Y+Z$

分配律（distributive laws）：

8. $X(Y+Z)=XY+XZ$ 　　8D. $X+YZ=(X+Y)(X+Z)$

笛摩根定律（DeMorgan's laws）：

9. $(X+Y)'=X'Y'$ 　　9D. $(XY)'=X'+Y'$

2.6 Simplification Theorems

(p 46)

1. Uniting： $XY + XY' = X$ (2-15)

$(X + Y)(X + Y') = X$ (2-15D)

---

2. Absorption： $X + XY = X$ (2-16)

$X(X + Y) = X$ (2-16D)

---

3. Elimination： $X + X'Y = X + Y$ (2-17)

$X(X' + Y) = XY$ (2-17D)

---

4. Consensus： $XY + X'Z + YZ = XY + X'Z$ (2-18)

$(X + Y)(X' + Z)(Y + Z) = (X + Y)(X' + Z)$

(2-18D)

2.6 Simplification Theorems

(p 47)

$$Proof\ of\ (2-15):$$

$$XY + XY' = X(Y + Y') = X(1) = X$$

$$Proof\ of\ (2-16):$$

$$X + XY = X \cdot 1 + XY = X(1 + Y) = X \cdot 1 = X$$

2.6 Simplification Theorems (p 47)

Redundant Variable (它的存在與否不會改變括號內的真偽)

因為X+X'已經包含所有可能性了!!!!

$$Proof\ of\ (2-17): X + X'Y$$

$$= X(X + X' + Y) + X'Y = XX + XX' + XY + X'Y$$

$$= X(X + X') + Y(X + X') = (X + X')(X + Y)$$

$$= 1(X + Y) = X + Y$$

2.6 Simplification Theorems

(p 47)

$$Proof\ of\ (2-18):$$

$$XY + X'Z + YZ = XY + X'Z + (1)YZ$$

$$= XY + X'Z + (X + X')YZ$$

$$= XY + XYZ + X'Z + X'YZ$$

$$= XY(1+Z) + X'Z(1+Y)$$

$$= XY + X'Z \quad (Absorption\ twice)$$

2.6 Simplification Theorems

(p 48)

F=A(A'+B)

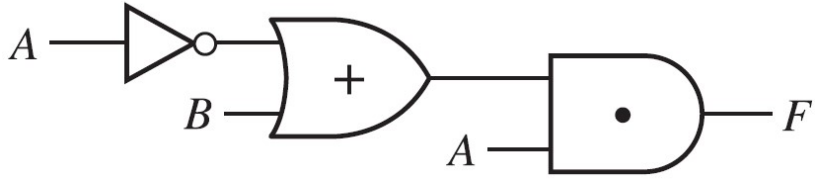

(a)

|||

F=A(A'+B)= AA' + AB=0+AB=AB

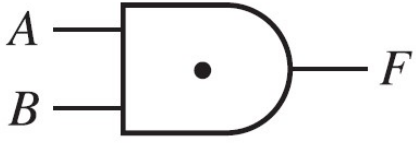

(b)

➡ Reduction of Gate counts ➡ Area & Cost Reduction

➡ Your boss'll love you more ❤️❤️❤️

2.6 Simplification Theorems (p 48)

- Example 1:
  - **To Simplify Z = A'BC+ A'**

If X is A' and Y is BC, then this algebraic is the same to the absorption theorem format of (2-16)
Therefore, this algebraic formula can be simplified to

$$Z=X+XY=X\ (1+Y)=X*1=X=A'$$

2.6 Simplification Theorems (p 48)

- Example 2:

Simplify: $Z = [\underbrace{A + B'C}_{} + \underbrace{D + EF}_{}]\,[\underbrace{A + B'C}_{} + \underbrace{(D + EF)'}_{}]$

Substitute: $Z = [\quad X \quad + \quad Y \quad]\,[\quad X \quad + \quad Y' \quad]$

$$Z = XX + XY' + YX + \cancel{YY'} = X + X(Y' + Y) = X + X(1) = X + X = X$$

$$\Rightarrow \quad Z = X = A + B'C$$

2.6 Simplification Theorems (p 48)

- Example 3:

Simplify: $Z = \underbrace{(AB + C)}_{X'}\underbrace{(B'D + C'E')}_{Y} + \underbrace{(AB + C)'}_{X}$

Substitute: $Z = X' \quad Y \quad + \quad X$

Applying (2-17) elimination theorem:

$Z = X + Y = B'D + C'E' + (AB + C)'$

Note in this example, in order to conform to the (2-17) elimination theorem format, we make X = (AB+C)′ instead of (AB+C).

2.6 Simplification Theorems (p 49)

聯合定理（uniting theorems）：

1. $XY + XY' = X$ 1D. $(X + Y)(X + Y') = X$

吸收定理（absorption theorems）：

2. $X + XY = X$ 2D. $X(X + Y) = X$

消除定理（elimination theorems）：

3. $X + X'Y = X + Y$ 3D. $X(X' + Y) = XY$

對偶性（duality）：

4. $(X + Y + Z + \cdots)^D = XYZ\ldots$ 4D. $(XYZ\ldots)^D = X + Y + Z + \cdots$

乘開與分解定理（theorems for multiplying out and factoring）：

5. $(X + Y)(X' + Z) = XZ + X'Y$ 5D. $XY + X'Z = (X + Z)(X' + Y)$

重合定理（consensus theorems）：

6. $XY + YZ + X'Z = XY + X'Z$ 6D. $(X + Y)(Y + Z)(X' + Z) = (X + Y)(X' + Z)$

2.7 Multiplying Out and Factoring (p 49)

- Distribution laws are commonly used to multiply algebraic to obtain product and sum-of-products, SOP. (積項和)

- Distribution laws can also be used to break down algebraic in the form of product-of-sums, POS. (和項積)

2.7 Multiplying Out and Factoring (p 49)

- Sum-of-products, SOP. (積項和)

$$AB' + CD'E + AC'E' \qquad (2\text{-}19)$$

$$ABC' + DEFG + H \qquad (2\text{-}20)$$

$$A + B' + C + D'E \qquad (2\text{-}21)$$

2.7 Multiplying Out and Factoring (p 50)

- Product-of-sums, POS. (和項積)

$$(A+B')(C+D'+E)(A+C'+E') \qquad (2\text{-}22)$$

$$(A+B)(C+D+E)F \qquad (2\text{-}23)$$

$$AB'C(D'+E) \qquad (2\text{-}24)$$

2.7 Multiplying Out and Factoring (p 50)

- Example 1:

Break down the A+B'CD. This is in the form of X+YZ, where X=A, Y=B' and Z=CD. So

$$A + B'CD = (X + Y)(X + Z) = (A + B')(\underbrace{A + CD})$$

The A+CD can be broken down again using the second distribution law, so A+CD = $\underbrace{(A+C)(A+D)}$, substituting into

$$A + B'CD = (A + B')\overbrace{(A + C)(A + D)}$$

2.7 Multiplying Out and Factoring (p 50)

- Example 2:

Break down the AB’+C’D

$$AB' + C'D = (AB' + C')(AB' + D)$$

← 留意在此如何運用

$$X + YZ = (X + Y)(X + Z)$$

AB’ C’ D

$$= (A + C')(B' + C')(A + D)(B' + D)$$

← 每一項再用一次第二分配律

2.7 Multiplying Out and Factoring (p 51)

- Example 3:

Break down the C'D+C'E'+G'H

$C'D + C'E' + G'H = C'(D + E') + G'H$ ← 先運用一般的分配律

$XY + XZ = X(Y + Z)$

$= (C' + G'H)(D + E' + G'H)$ ← 再用第二分配律

$= (C' + G')(C' + H)(D + E' + G')(D + E' + H)$ ← 再用第二分配律

2nd distribution: X+YZ=(X+Y)(X+Z)

2.7 Multiplying Out and Factoring (p 51)

- Circuits shown in Figures 2-5 and 2-6 are often referred to as second-order circuits because there are only two logic gates in series between the input and output of the circuit.

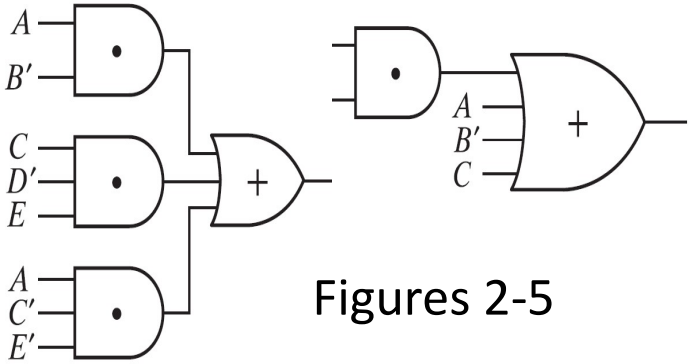

Figures 2-5

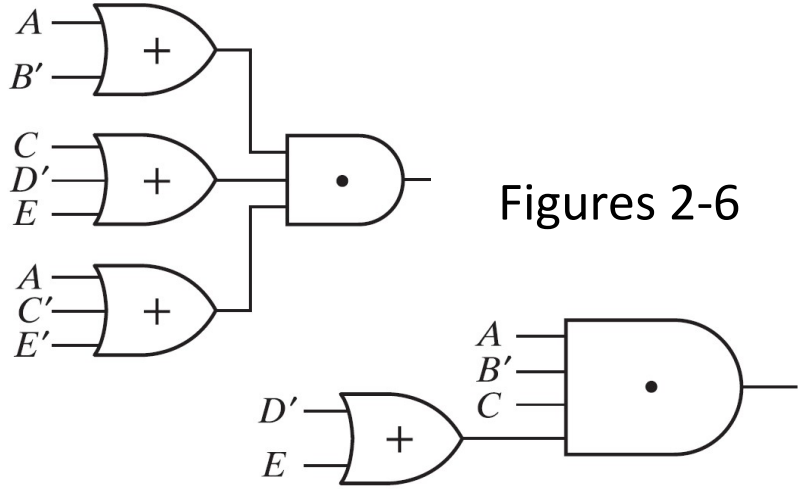

Figures 2-6

2.8 A complement to Boolean algebra (p 52)

- DeMorgan's law can easily be expanded to n variables:

$$(X_1 + X_2 + X_3 + \ldots + X_n)' = X_1' X_2' X_3' \ldots X_n' \quad (2\text{-}25)$$

$$(X_1 X_2 X_3 \ldots X_n)' = X_1' + X_2' + X_3' + \ldots + X_n' \quad (2\text{-}26)$$

- The complement of the product is equal to the sum of the complements. (積項的補數等於補數項的和。)

- The complement of the sum item is equal to the product of the complements. (和項的補數等於補數項的積。)

2.8 A complement to Boolean algebra (p 52)

- Example 1:

$$[(A'+B)C']' = (A'+B)'+(C')' = AB'+C$$

2.8 A complement to Boolean algebra (p 52)

- Example 2:

$$
\begin{aligned}
[(AB'+C)D'+E]' &= [(AB'+C)D']'E' && \text{（運用 (2-12) 式）} \\
&= [(AB'+C)'+D]E' && \text{（運用 (2-13) 式）} \\
&= [(AB')C'+D]E' && \text{（運用 (2-12) 式）} \\
&= [(A'+B)C'+D]E' && \text{（運用 (2-13) 式）} \quad (2\text{-}27)
\end{aligned}
$$

2.8 A complement to Boolean algebra (p 53)

- Inverse or complement of the expression (反轉式):

$$\boxed{F=A'B+AB'}$$

$$F'=(A'B+AB')'=(A'B)'(AB')'=(A+B')(A'+B)$$
$$=AA'+AB+B'A'+B'B=A'B'+AB$$

2.8 A complement to Boolean algebra (p 53)

- Dual (對偶式):

$$\boxed{F=(AB'+C)}$$

to take the complement of the entire algebraic formula,

$$F'=(AB'+C)'=(AB')'C'=(A'+B)C'$$

and then take the complement of each variable,

$$F^D=(A+B')C$$

2.8 A complement to Boolean algebra (p 53)

- Dual (對偶式):

對偶性（duality）：

4. $(X+Y+Z+\cdots)^D = XYZ\ldots$	4D. $(XYZ\ldots)^D = X+Y+Z+\cdots$
F=(X+Y+Z+…)	F=(XYZ…)
F’=(X+Y+Z+…)’=X’Y’Z’…	F’=X’+Y’+Z’+…
F^D=XYZ…	F^D=X+Y+Z…