EE2016-B- Fall 2021

數位系統導論

Fundamentals of Logic Design-Chapter 4:

Boolean Algebra

Minterm and Maxterm Expansion

Prof. E Ray Hsieh 謝易叡 助理教授

4.1 Conversion of English Sentences to Boolean Equations

p 94

- **The three main steps in designing a single-output combinational switching circuit are:**

1. Find a switching function that specifies the designed behavior of the circuit.
2. Find a simplified algebraic expression for the function.
3. Realize the simplified function using available logic elements.

4.1 Conversion of English Sentences to Boolean Equations

p 95

- **Represent the sentence below by Boolean variable:**

E.g.1:

Mary watches TV if it is Monday night and she has finished her homework.

1. F=1 if “Mary watches TV” is true; otherwise, F=0.
2. A=1 if “it is Monday night” is true; otherwise, A=0.
3. B=1 if “she has finished her homework” is true; otherwise, B=0.

➡ F is “true” if A and B are both “true”.

➡ **F=A*B**

4.1 Conversion of English Sentences to Boolean Equations

p 95

E.g.2:

"The alarm will ring **iff** its switch is turned on **and** the door is *not* closed **or** it is after 6 P.M. **and** the window is *not* closed."

➡ **(The alarm will ring) iff (its switch is turned on)** and

Z "=" A

(the door is not closed) or **(it is after 6 P.M.)** and

B' C

(the window is not closed.) ➡ $\boxed{Z=AB'+CD'}$

D'

4.1 Conversion of English Sentences to Boolean Equations

p 95

E.g.2:

$$\boxed{Z=AB'+CD'}$$

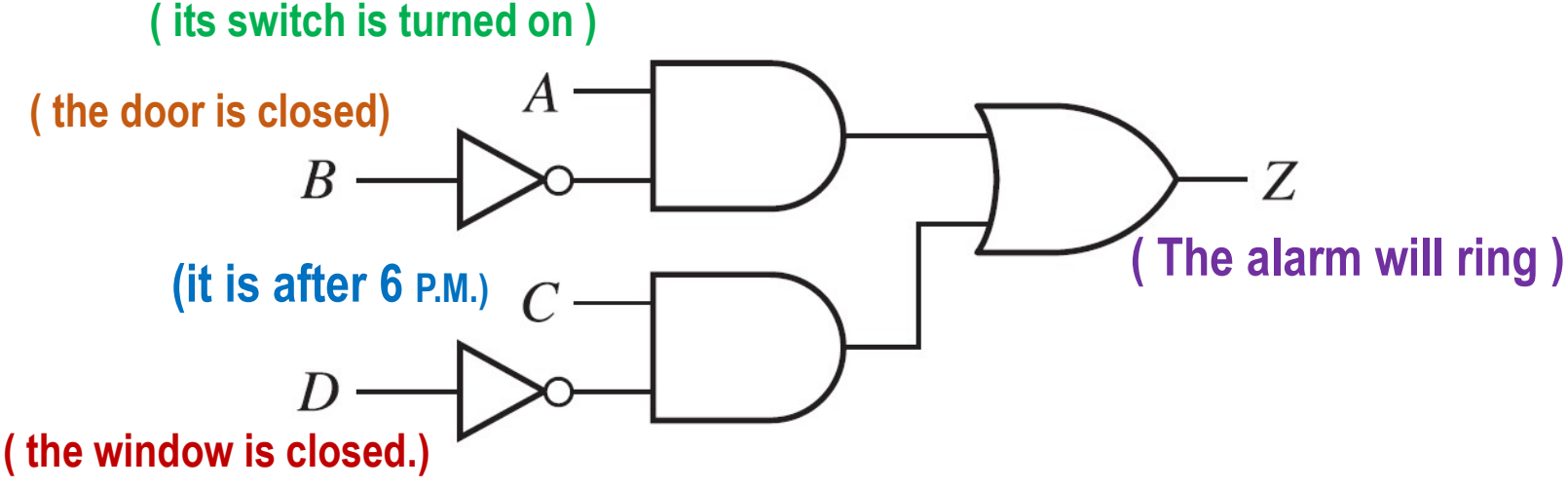

4.2 Combinational Logic Design Using a Truth Table

p 96

- A Switching CKT has 3 inputs and 1 output.
- The inputs A, B, C represent the 1st, 2nd, 3rd bit, respectively, of a binary N.
- The output is to be f=1 if N≥ 011 and f =0 if N < 011.

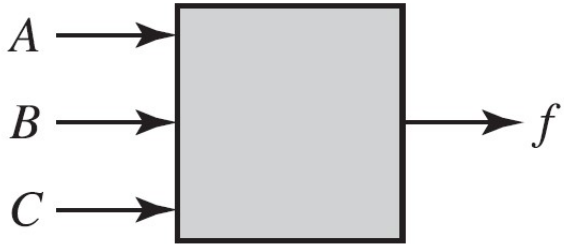

A	B	C	f	f′
0	0	0	0	1
0	0	1	0	1
0	1	0	0	1
0	1	1	1	0
1	0	0	1	0
1	0	1	1	0
1	1	0	1	0
1	1	1	1	0

4.2 Combinational Logic Design Using a Truth Table

p 96

A	B	C	f	f'
0	0	0	0	1
0	0	1	0	1
0	1	0	0	1
0	1	1	1	0
1	0	0	1	0
1	0	1	1	0
1	1	0	1	0
1	1	1	1	0

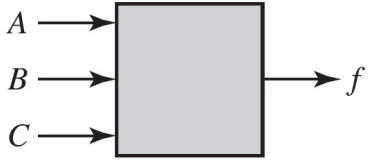

(method 1 - *SOP of f*)

$$f = A'BC + (AB'C' + AB'C) + (ABC' + ABC)$$

$$f = A'BC + AB' + AB = A'BC + A = A + BC$$

f=A+BC

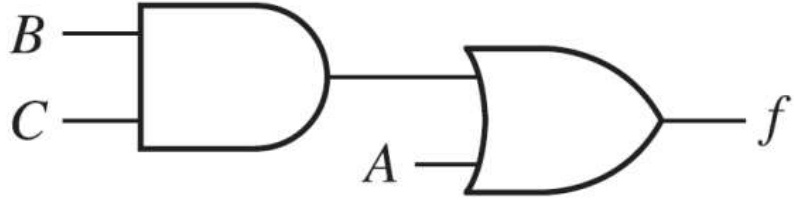

4.2 Combinational Logic Design Using a Truth Table

A	B	C	f	f'
0	0	0	0	1
0	0	1	0	1
0	1	0	0	1
0	1	1	1	0
1	0	0	1	0
1	0	1	1	0
1	1	0	1	0
1	1	1	1	0

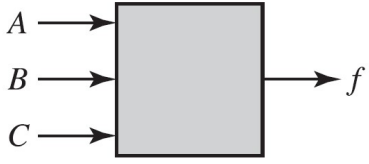

(method 2- *POS of f*)

$$f = \underbrace{(A + B + C)(A + B + C')}_{\text{absorption}}(A + B' + C)$$

$$f = (A + B)(A + B' + C) = A + B(B' + C)$$
$$= A + BC$$

f=A+BC

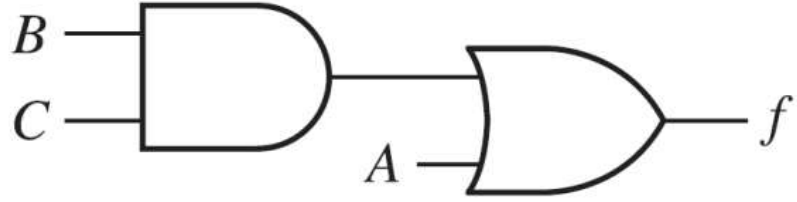

4.2 Combinational Logic Design Using a Truth Table

p 97

A	B	C	f	f'
0	0	0	0	1
0	0	1	0	1
0	1	0	0	1
0	1	1	1	0
1	0	0	1	0
1	0	1	1	0
1	1	0	1	0
1	1	1	1	0

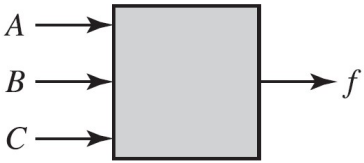

(method 3 - *SOP of f'*)

$$f' = A'B'C' + A'B'C + A'BC'$$

$$f = (A + B + C)(A + B + C')(A + B' + C)$$

$$\vdots$$

(method 4 - *POS of f'*)

$$f' = (A + B' + C')(A' + B + C)(A' + B + C')$$
$$(A' + B' + C)(A' + B' + C')$$

$$f = A'BC + AB'C' + AB'C + ABC' + ABC$$

$$\vdots$$

4.3 Minterm and Maxterm Expansions

p 97

- minterm（全及項）: A minterm of n variables is a **product** of n literals in which each variable appears exactly once in either true or complemented form, but not both.

列數	$A\ B\ C$	全及項
0	0 0 0	$A'B'C' = m_0$
1	0 0 1	$A'B'C = m_1$
2	0 1 0	$A'BC' = m_2$
3	0 1 1	$A'BC = m_3$
4	1 0 0	$AB'C' = m_4$
5	1 0 1	$AB'C = m_5$
6	1 1 0	$ABC' = m_6$
7	1 1 1	$ABC = m_7$

ABC都連在一起，寫起來佔位較小 → 小m。

4.3 Minterm and Maxterm Expansions

p 97

- Maxterm（全或項）: A maxterm of n variables is a **sum** of n literals in which each variable appears exactly once in either true or complemented form, but not both.

列數	$A\ B\ C$	全或項
0	0 0 0	$A + B + C = M_0$
1	0 0 1	$A + B + C' = M_1$
2	0 1 0	$A + B' + C = M_2$
3	0 1 1	$A + B' + C' = M_3$
4	1 0 0	$A' + B + C = M_4$
5	1 0 1	$A' + B + C' = M_5$
6	1 1 0	$A' + B' + C = M_6$
7	1 1 1	$A' + B' + C' = M_7$

ABC中間有+號，寫起來佔位較大 → 大M。

4.3 Minterm and Maxterm Expansions

p 98

$$m \xleftrightarrow[\text{each other}]{\text{compliment to}} M$$

全及項	全或項
$A'B'C' = m_0$	$A + B + C = M_0$
$A'B'C = m_1$	$A + B + C' = M_1$
$A'BC' = m_2$	$A + B' + C = M_2$
$A'BC = m_3$	$A + B' + C' = M_3$
$AB'C' = m_4$	$A' + B + C = M_4$
$AB'C = m_5$	$A' + B + C' = M_5$
$ABC' = m_6$	$A' + B' + C = M_6$
$ABC = m_7$	$A' + B' + C' = M_7$

4.3 Minterm and Maxterm Expansions p 98

- minterm expansion（全及項展開式）或 Standard sum of products（標準積項和）：

- The minterm expansion for a function *f* is **unique**.

$$f(A,B,C) = \overset{A'BC}{m_3} + \overset{AB'C'}{m_4} + \overset{AB'C}{m_5} + \overset{ABC'}{m_6} + \overset{ABC}{m_7} \qquad (4\text{-}5)$$

$$f(A,B,C) = \sum m(3,4,5,6,7) \qquad (4\text{-}5a)$$

4.3 Minterm and Maxterm Expansions

p 99

- Maxterm expansion（全或項展開式）或 Standard product of sums（標準和項積）：

- The Maxterm expansion for a function *f* is **unique**.

A+B+C　　A+B+C'　　A+B'+C

$$f(A,B,C) = M_0 M_1 M_2 \qquad (4\text{-}6)$$

$$f(A,B,C) = \Pi M(0,1,2) \qquad (4\text{-}6a)$$

4.3 Minterm and Maxterm Expansions

p 98

m $\xleftrightarrow[\text{each other}]{\text{compliment to}}$ M

$A'B'C'$	$= m_0$	$A + B + C$	$= M_0$
$A'B'C$	$= m_1$	$A + B + C'$	$= M_1$
$A'BC'$	$= m_2$	$A + B' + C$	$= M_2$
$A'BC$	$= m_3$	$A + B' + C'$	$= M_3$
$AB'C'$	$= m_4$	$A' + B + C$	$= M_4$
$AB'C$	$= m_5$	$A' + B + C'$	$= M_5$
ABC'	$= m_6$	$A' + B' + C$	$= M_6$
ABC	$= m_7$	$A' + B' + C'$	$= M_7$

$$f(A,B,C) = M_0 M_1 M_2$$

F's compliment

$$f'(A,B,C) = (M_0 M_1 M_2)' =$$

$$M'_0 + M'_1 + M'_2 = (A+B+C)' + (A+B+C')' + (A+B'+C)' =$$

$$(A'B'C') + (A'B'C) + (A'BC') = m_0 + m_1 + m_2$$

4.3 Minterm and Maxterm Expansions

p 98

$$m \xleftrightarrow[\text{each other}]{\text{compliment to}} M$$

Another opinion:

Because f' is 1 as f=0. the **minterm expansion for f'** contains those minterms not present in f.

$$f(A,B,C) = m_3 + m_4 + m_5 + m_6 + m_7 \qquad (4-5)$$

F's compliment

$$f' = m_0 + m_1 + m_2 = \sum m(0,\ 1,\ 2) \qquad (4\text{-}7)$$

$$f' = \Pi M(3,4,5,6,7) = M_3 M_4 M_5 M_6 M_7 \qquad (4\text{-}8)$$

4.3 Minterm and Maxterm Expansions

p 99

- A general switching expression can be converted to a minterm or Maxterm expansion either a truth table or algebraically.

- To obtain the minterm expansion is to first write the expression as a sum of products and then introduce the missing variables in each term by applying the theorem :

$$\boxed{X+X'=1}$$

4.3 Minterm and Maxterm Expansions

p 99

- E.g. 1 minterm expansion:

補項

$$f = a'b' + a'd + acd'$$

$$= a'b'(c+c')(d+d') + a'd(b+b')(c+c') + acd'(b+b')$$

$$= \underbrace{a'b'c'd'}_{\underset{0\ 0\ 0\ 0}{m_0}} + \underbrace{a'b'c'd}_{\underset{0\ 0\ 0\ 1}{m_1}} + \underbrace{a'b'cd'}_{\underset{0\ 0\ 1\ 0}{m_2}} + \underbrace{a'b'cd}_{\underset{0\ 0\ 1\ 1}{m_3}} + \cancel{a'b'c'd} + \cancel{a'b'cd}$$

$$\underset{0\ 0\ 0\ 1}{} \qquad \underset{0\ 0\ 1\ 1}{}$$

$$+ \underbrace{a'bc'd}_{\underset{0\ 1\ 0\ 1}{m_5}} + \underbrace{a'bcd}_{\underset{0\ 1\ 1\ 1}{m_7}} + \underbrace{abcd'}_{\underset{1\ 1\ 1\ 0}{m_{14}}} + \underbrace{ab'cd'}_{\underset{1\ 0\ 1\ 0}{m_{10}}}$$

$$= \sum m(0,1,2,3,5,7,10,14)$$

4.3 Minterm and Maxterm Expansions

p 100

- E.g. 2 Maxterm expansion:

$$f = \sum m(0,1,2,3,5,7,10,14)$$

$\downarrow$ the compliment of f

$$f' = \sum m(4,6,8,9,11,12,13,15)$$

$\downarrow$ the compliment of f'

$$(f')' = f = \prod M(4,6,8,9,11,12,13,15) \quad \text{(DeMorgan's law)}$$

4.3 Minterm and Maxterm Expansions

p 100

- E.g. 2 Maxterm expansion: (another opinion)

$$f = a'(b'+d) + acd' \quad \text{(consensus)}$$

$$= \boxed{(a'+cd')}(a+b'+d) = \boxed{(a'+c)(a'+d')}(a+b'+d)$$

$$= (a'+\boxed{bb'}+c+\boxed{dd'})(a'+\boxed{bb'}+\boxed{cc'}+d')(a+b'+\boxed{cc'}+d)$$

$$= (a'+bb'+c+d)(a'+bb'+c+d')\,\cancel{(a'+bb'+c+d')}(a'+bb'+c'+d')$$

$$(a+b'+cc'+d)$$

$$= (a'+b+c+d)(a'+b'+c+d)(a'+b+c+d')(a'+b'+c+d')$$

1000 1100 1001 1101

$$(a'+b'+c'+d')(a'+b'+c'+d')(a+b'+c+d)(a+b'+c'+d)$$

1011 1111 0100 0110

$$= \Pi M(4,6,8,9,11,12,13,15) \qquad (4\text{-}11)$$

4.3 Minterm and Maxterm Expansions

p 100

- E.g. 3 minterm expansion: (another opinion)

$$a'c + b'c' + ab = a'b' + bc + ac'$$

$a'c + b'c' + ab =$	$a'b' + bc + ac' =$
$a'c\,(b+b') + b'c'\,(a+a') + ab\,(c+c') =$	$a'b'\,(c+c') + (a+a')bc + a\,(b+b')\,c' =$
$a'bc + a'b'c + ab'c' + a'b'c' + abc + abc' =$	$a'b'c + a'b'c + abc + a'bc + abc' + ab'c' =$
$m_3 + m_1 + m_4 + m_0 + m_7 + m_6 =$	$m_1 + m_0 + m_7 + m_3 + m_6 + m_4$

$$A'B'C' = m_0 \quad A'BC' = m_2 \quad AB'C' = m_4 \quad ABC' = m_6$$
$$A'B'C = m_1 \quad A'BC = m_3 \quad AB'C = m_5 \quad ABC = m_7$$

4.4 General minterm and Maxterm Expansions

p 102

SOP → m

POS → M

希望的形式

已知的形式	(m) f 的全及項展開式	(M) f 的全或項展開式	(m) f' 的全及項展開式	(M) f' 的全或項展開式
$f =$ (全及項) $\Sigma\, m(3, 4, 5, 6, 7)$		$\Pi\, M(0, 1, 2)$	$\Sigma\, m(0, 1, 2)$	$\Pi\, M(3, 4, 5, 6, 7)$
$f =$ (全或項) $\Pi\, M(0, 1, 2)$	$\Sigma\, m(3, 4, 5, 6, 7)$		$\Sigma\, m(0, 1, 2)$	$\Pi\, M(3, 4, 5, 6, 7)$

4.4 General minterm and Maxterm Expansions

p 102

SOP → m

POS → M

希望的形式

已知的形式	(m) f 的全及項展開式	(M) f 的全或項展開式	(m) f' 的全及項展開式	(M) f' 的全或項展開式
$f =$ (全及項) $\Sigma\, m(3, 4, 5, 6, 7)$		$\Pi\, M(0, 1, 2)$		
$f =$ (全或項) $\Pi\, M(0, 1, 2)$	$\Sigma\, m(3, 4, 5, 6, 7)$			

Step 1: 找相同。

4.4 General minterm and Maxterm Expansions

p 102

SOP → m

POS → M

已知的形式	(m) f 的全及項展開式	(M) f 的全或項展開式	(m) f' 的全及項展開式	(M) f' 的全或項展開式
$f =$ (全及項) $\Sigma\, m(3, 4, 5, 6, 7)$		$\Pi\, M(0, 1, 2)$		$\Pi\, M(3, 4, 5, 6, 7)$
$f =$ (全或項) $\Pi\, M(0, 1, 2)$	$\Sigma\, m(3, 4, 5, 6, 7)$		$\Sigma\, m(0, 1, 2)$	

Step 2: 找互補。

4.4 General minterm and Maxterm Expansions

p 102

希望的形式

已知的形式	f 的全及項展開式	f 的全或項展開式	f' 的全及項展開式	f' 的全或項展開式
$f =$ (全及項) $\Sigma\, m(3, 4, 5, 6, 7)$		$\Pi\, M(0, 1, 2)$	$\Sigma\, m(0, 1, 2)$	$\Pi\, M(3, 4, 5, 6, 7)$
$f =$ (全或項) $\Pi\, M(0, 1, 2)$	$\Sigma\, m(3, 4, 5, 6, 7)$		$\Sigma\, m(0, 1, 2)$	$\Pi\, M(3, 4, 5, 6, 7)$

Step 3: 同行的一樣。

4.4 General minterm and Maxterm Expansions

p 102

SOP → m

POS → M

Step 1: 找相同。

Step 2: 找互補。

Step 3: 同行的一樣。

已知的形式	f 的全及項展開式	f 的全或項展開式	f' 的全及項展開式	f' 的全或項展開式
$f =$ (全及項) $\Sigma\, m(3, 4, 5, 6, 7)$		$\Pi\, M(0, 1, 2)$	$\Sigma\, m(0, 1, 2)$	$\Pi\, M(3, 4, 5, 6, 7)$
$f =$ (全或項) $\Pi\, M(0, 1, 2)$	$\Sigma\, m(3, 4, 5, 6, 7)$		$\Sigma\, m(0, 1, 2)$	$\Pi\, M(3, 4, 5, 6, 7)$

4.5 Incompletely Specified Functions

p 103

- Consider the following example in which the output of circuit N1 drives the input of circuit N2.

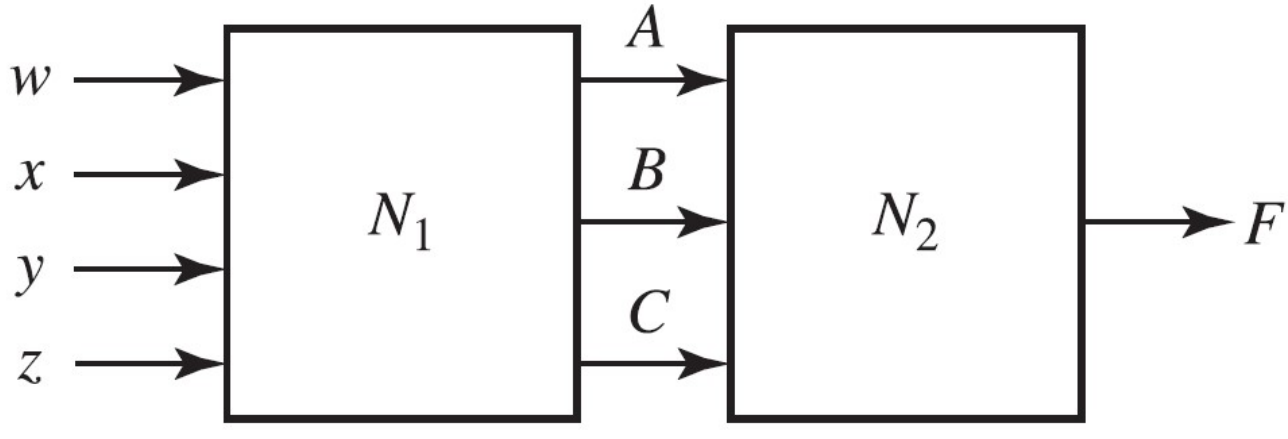

4.5 Incompletely Specified Functions

p 103

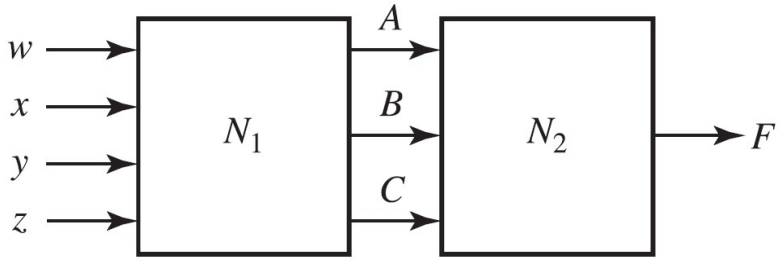

A B C	F
0 0 0	1
0 0 1	X
0 1 0	0
0 1 1	1
1 0 0	0
1 0 1	0
1 1 0	X
1 1 1	1

"X" means "don't care"

F is incompletely specified.
(未完全定義)

- Truth Table with Don't Cares.

4.5 Incompletely Specified Functions

p 103

- If both "X"s = 0,

A B C	F
0 0 0	1
0 0 1	X=0
0 1 0	0
0 1 1	1
1 0 0	0
1 0 1	0
1 1 0	X=0
1 1 1	1

$$F = A'B'C' + A'BC + ABC = A'B'C' + BC$$

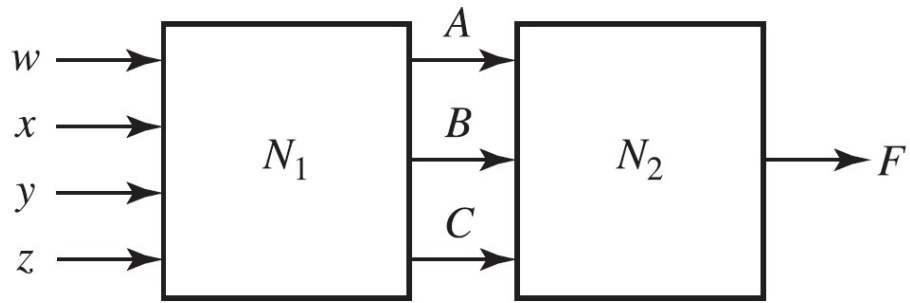

4.5 Incompletely Specified Functions

p 103

- If both "X"s = 1,

A B C	F
0 0 0	1
0 0 1	X=1
0 1 0	0
0 1 1	1
1 0 0	0
1 0 1	0
1 1 0	X=1
1 1 1	1

$$F = A'B' + BC$$

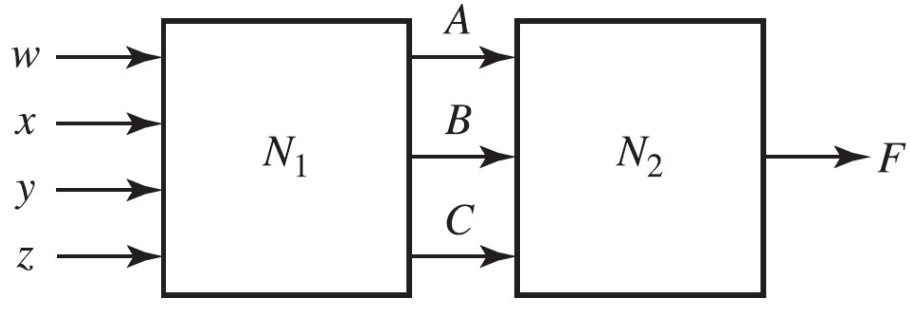

4.5 Incompletely Specified Functions

p 104

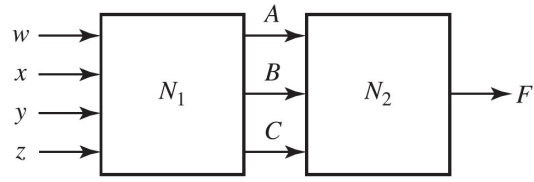

- If one "X"s = 1 and the other "X"s = 0 ,

CASE 1

A	B	C	F
0	0	0	1
0	0	1	X=1
0	1	0	0
0	1	1	1
1	0	0	0
1	0	1	0
1	1	0	X=0
1	1	1	1

$$F = A'B' + BC + ABC$$

CASE 2

A	B	C	F
0	0	0	1
0	0	1	X=0
0	1	0	0
0	1	1	1
1	0	0	0
1	0	1	0
1	1	0	X=1
1	1	1	1

$$F = A'B'C' + BC + AB$$

4.5 Incompletely Specified Functions p 104

- If both "X"s = 0, $F = A'B'C' + A'BC + ABC = A'B'C' + BC$
- If both "X"s = 1, $F = A'B' + BC$ (the most condensed)
- If one "X"s = 1 and the other "X"s = 0 ,

$$F = A'B' + BC + ABC; \quad F = A'B'C' + BC + AB$$

- Expansion of Minterms: $F = \sum m(0,3,7) + \sum d(1,6)$
- Expansion of Maxterms: $F = \prod M(2,4,5) \cdot \prod D(1,6)$

4.6 Examples of Truth Table Constructions p 104

- E.g. 1: We will design a simple binary adder that adds 2 1-bit binary numbers, a and b, to give a 2=bit sum.

a	b	Sum
0	0	00 $(0+0=0)$
0	1	01 $(0+1=1)$
1	0	01 $(1+0=1)$
1	1	10 $(1+1=2)$

A	B	X	Y
0	0	0	0
0	1	0	1
1	0	0	1
1	1	1	0

$$X = AB \quad \text{和} \quad Y = A'B + AB' = A \oplus B$$

4.6 Examples of Truth Table Constructions

p 105

- E.g. 2: An adder is to be designed which adds 2 2-bit binary number to give a 3-bit binary sum.

	A	B	N1
+	C	D	N2
X	Y	Z	N3

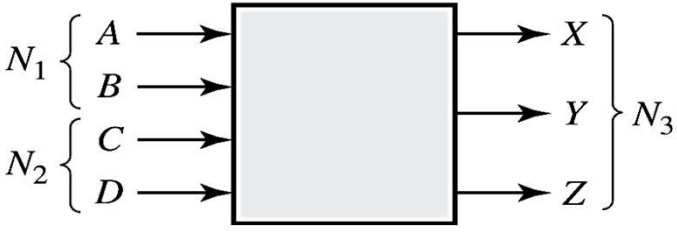

N_1		N_2		N_3		
A	B	C	D	X	Y	Z
0	0	0	0	0	0	0
0	0	0	1	0	0	1
0	0	1	0	0	1	0
0	0	1	1	0	1	1
0	1	0	0	0	0	1
0	1	0	1	0	1	0
0	1	1	0	0	1	1
0	1	1	1	1	0	0
1	0	0	0	0	1	0
1	0	0	1	0	1	1
1	0	1	0	1	0	0
1	0	1	1	1	0	1
1	1	0	0	0	1	1
1	1	0	1	1	0	0
1	1	1	0	1	0	1
1	1	1	1	1	1	0

4.6 Examples of Truth Table Constructions

p 106

N_1		N_2		N_3		
A	B	C	D	X	Y	Z
0	0	0	0	0	0	0
0	0	0	1	0	0	1
0	0	1	0	0	1	0
0	0	1	1	0	1	1
0	1	0	0	0	0	1
0	1	0	1	0	1	0
0	1	1	0	0	1	1
0	1	1	1	1	0	0
1	0	0	0	0	1	0
1	0	0	1	0	1	1
1	0	1	0	1	0	0
1	0	1	1	1	0	1
1	1	0	0	0	1	1
1	1	0	1	1	0	0
1	1	1	0	1	0	1
1	1	1	1	1	1	0

$$X(A,B,C,D) = \sum m(7,10,11,13,14,15)$$

$$Y(A,B,C,D) = \sum m(2,3,5,6,8,9,12,15)$$

$$Z(A,B,C,D) = \sum m(1,3,4,6,9,11,12,14)$$

4.6 Examples of Truth Table Constructions

p 106

- e.g. 1 Design an error detector for 6-3-1-1 binary-coded-decimal digits.

$$F = \sum m(2,6,10,13,14,15)$$

$$= A'B'CD' + A'BCD' + AB'CD' + ABCD' + ABC'D + ABCD$$

$$= A'CD' + ACD' + ABD = CD' + ABD$$

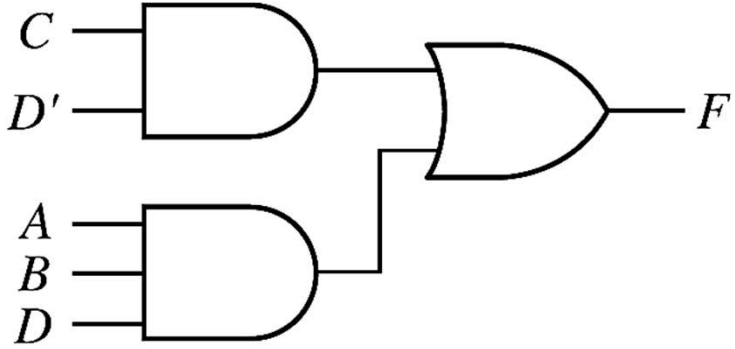

A	B	C	D	F
0	0	0	0	0
0	0	0	1	0
0	0	1	0	1
0	0	1	1	0
0	1	0	0	0
0	1	0	1	0
0	1	1	0	1
0	1	1	1	0
1	0	0	0	0
1	0	0	1	0
1	0	1	0	1
1	0	1	1	0
1	1	0	0	0
1	1	0	1	1
1	1	1	0	1
1	1	1	1	1

4.6 Examples of Truth Table Constructions

p 107

- e.q. 2 The 4 inputs to a circuit (A, B, C, D) represent an 8-4-2-1 binary-coded-decimal digit.
- Design the circuit so that the output (Z) is 1 iff the decimal number represented by the inputs is exactly divisible by 3.
- Assume that only valid BCD digits occur.

$$Z = \sum m(0,3,6,9) + \sum d(10,11,12,13,14,15)$$

Simplify Z by Karnaugh map in chapter 5.

A	B	C	D	Z
0	0	0	0	1
0	0	0	1	0
0	0	1	0	0
0	0	1	1	1
0	1	0	0	0
0	1	0	1	0
0	1	1	0	1
0	1	1	1	0
1	0	0	0	0
1	0	0	1	1
1	0	1	0	X
1	0	1	1	X
1	1	0	0	X
1	1	0	1	X
1	1	1	0	X
1	1	1	1	X

4.7 Design of Binary Adders and Substracters p 108

- A parallel adder that adds two 4-bit unsigned binary numbers and a carry input to give a 4-bit sum and a carry output.

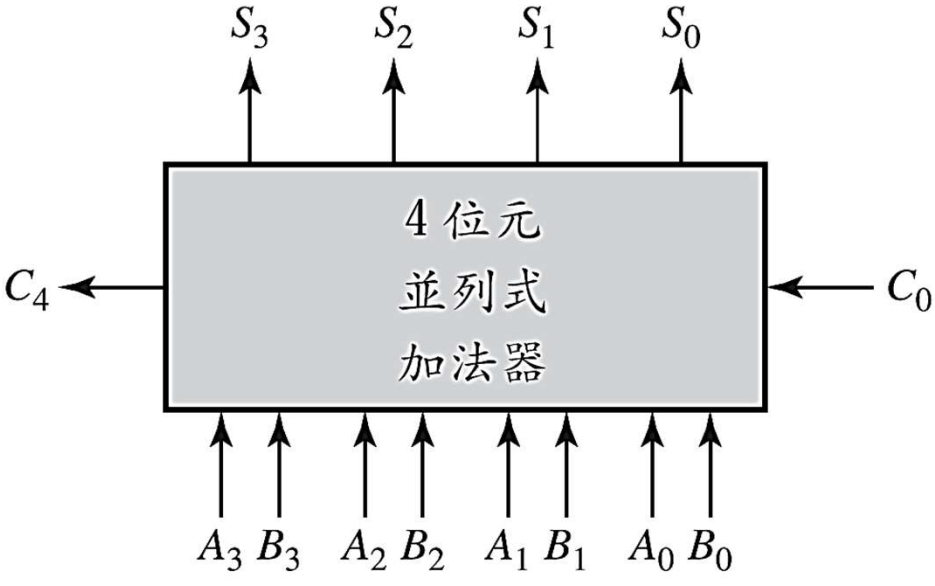

4.7 Design of Binary Adders and Subtractors

p 108

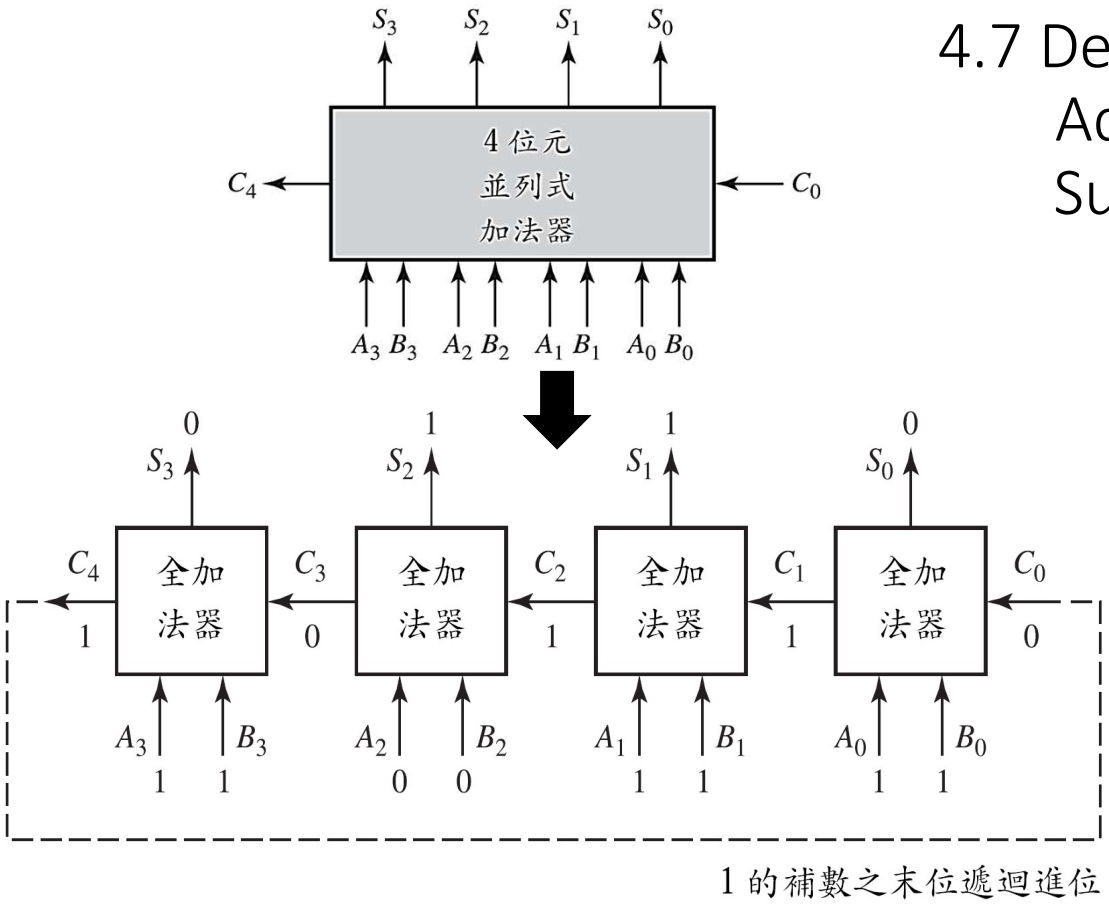

$$
\begin{array}{r}
10110 \quad (\text{進位}) \\
1011 \\
+\ 1011 \\
\hline
10110
\end{array}
$$

4.7 Design of Binary Adders and Subtractors

p 108

- **Full Adders:**

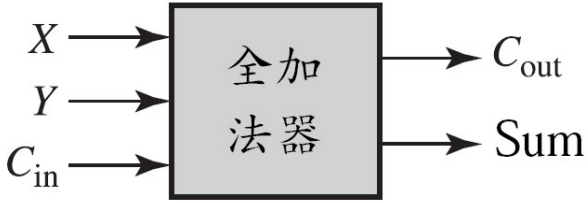

X	Y	C_{in}	C_{out}	Sum
0	0	0	0	0
0	0	1	0	1
0	1	0	0	1
0	1	1	1	0
1	0	0	0	1
1	0	1	1	0
1	1	0	1	0
1	1	1	1	1

4.7 Design of Binary Adders and Subtractors

p 108

- **Full Adders:**

X	Y	C_{in}	C_{out}	Sum
0	0	0	0	0
0	0	1	0	1
0	1	0	0	1
0	1	1	1	0
1	0	0	0	1
1	0	1	1	0
1	1	0	1	0
1	1	1	1	1

$$\begin{aligned}\text{Sum} &= X'Y'C_{in} + X'YC_{in} + XY'C_{in} + XYC_{in} \\ &= X'(Y'C_{in} + YC_{in}) + X(Y'C_{in} + YC_{in}) \\ &= X'(Y \oplus C_{in}) + X(Y \oplus C_{in})' = X \oplus Y \oplus C_{in} \qquad (4\text{-}20)\end{aligned}$$

$$\begin{aligned}C_{out} &= X'YC_{in} + XY'C_{in} + XYC_{in} + XYC_{in} \\ &= (X'YC_{in} + XYC_{in}) + (XY'C_{in} + XYC_{in}) + (XYC_{in} + XYC_{in}) \\ &= YC_{in} + XC_{in} + XY \qquad (4\text{-}21)\end{aligned}$$

$$\boxed{\begin{aligned}\text{Sum} &= X \oplus Y \oplus C_{in} \\ C_{out} &= YC_{in} + XC_{in} + XY\end{aligned}}$$

4.7 Design of Binary Adders and Subtractors

p 109

- **Full Adders:**

X	Y	C_{in}	C_{out}	Sum
0	0	0	0	0
0	0	1	0	1
0	1	0	0	1
0	1	1	1	0
1	0	0	0	1
1	0	1	1	0
1	1	0	1	0
1	1	1	1	1

$$\text{Sum} = X \oplus Y \oplus C_{\text{in}}$$
$$C_{\text{out}} = YC_{\text{in}} + XC_{\text{in}} + XY$$

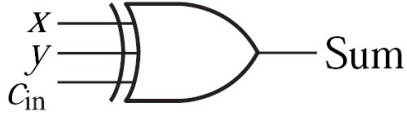

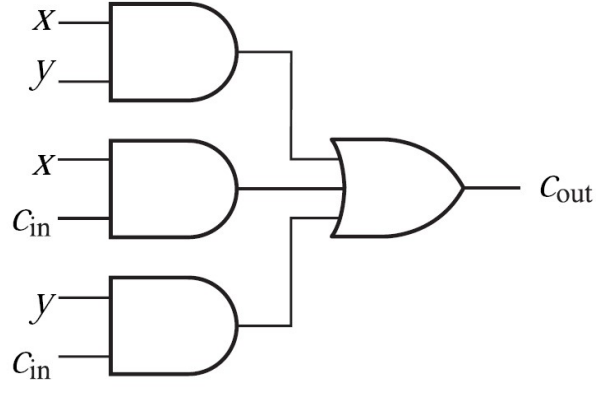

4.7 Design of Binary Adders and Subtractors

p 110

- Full Adders: Subtractors
- To form A – B using the **2's complement** representation for negative numbers.

$$A - B = A + (-B) = A + (2' \text{ of } B)$$

$$(2' \text{ of } B) = (1' \text{ of } B) + 1$$

$A = 0110$ (+6)
$B = 0011$ (+3)

The adder output is

$$\begin{array}{rrl} & 0110 & (+6) \\ & +1100 & (1\text{'s complement of } 3) \\ & +\quad 1 & (\text{first carry input}) \\ \hline (1) & 0011 & = 3 = 6 - 3 \end{array}$$

4.7 Design of Binary Adders and Subtractors p 111

- Full Adders: Subtractors

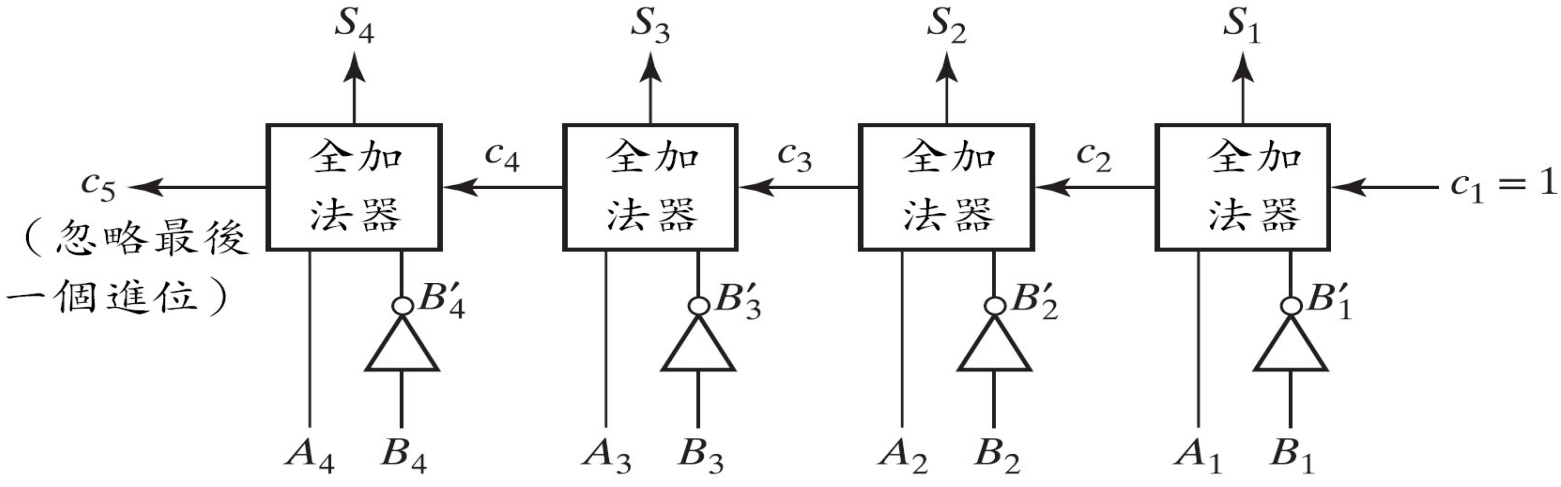

	0110	(+6)
	+1100	(1's complement of 3)
	+ 1	(first carry input)
(1)	0011	$= 3 = 6 - 3$