EE2016-B- Fall 2021

數位系統導論

Fundamentals of Logic Design-Chapter 7: Multi-Level Gate Circuits NAND and NOR Gates

Prof. E Ray Hsieh 謝易叡 助理教授

7.1 Multi-Level Gate Circuits

p. 199

- Level (階數) :The maximum number of gates that can be connected in series between the input and output of a circuit is called the order of the gates.
  1. **AND-OR circuit**
  2. **OR-AND circuit**
  3. **OR-AND-OR circuit**
  4. **ANDs circuit / Ors circuit**

7.1 Multi-Level Gate Circuits

p. 200

- The number of levels in an AND-OR circuit can usually be increased by factoring the sum-of-products expression.
- The number of levels in an OR-AND circuit can be increased by multiplying out some of the terms in the product-of-sums expression.
- The number of gates, gate inputs, and levels in a circuit can be determined by inspection of the corresponding expression.

p. 200

$$Z = (AB + C)[(D + E) + FG] + H$$

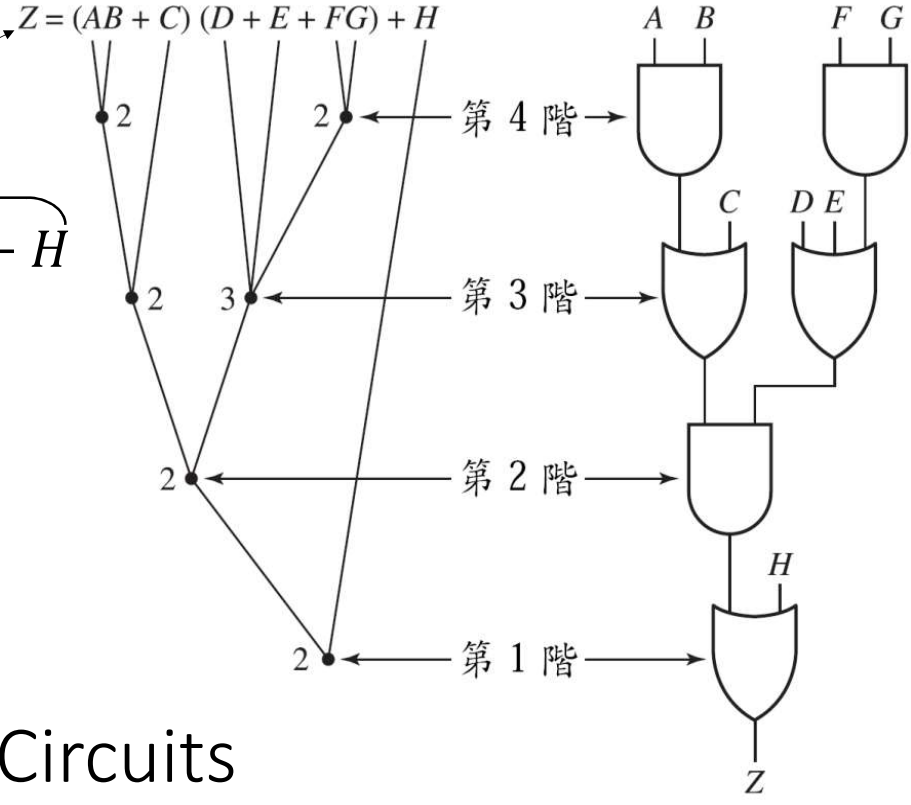

7.1 Multi-Level Gate Circuits

7.1 Multi-Level Gate Circuits

$$Z = (AB + C)[(D + E) + FG] + H =$$
$$AB(D + E) + C(D + E) + ABFG + CFG + H$$

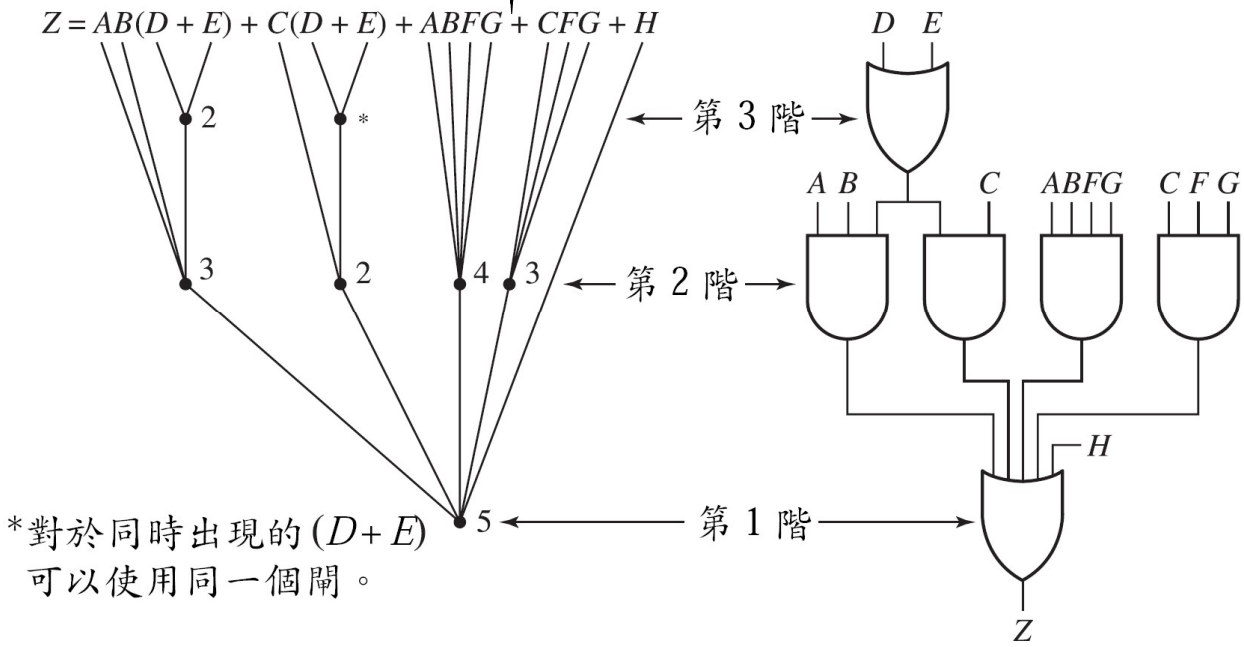

7.1 Multi-Level Gate Circuits

- E.g.1 Find an AND-OR circuit to implement the function:

$$f(a,b,c,d) = \sum m(1,5,6,10,13,14)$$

7.1 Multi-Level Gate Circuits p. 201

- E.g.1 Use Karnaugh map to simplify f:

$cd \backslash ab$	00	01	11	10
00	0	0	0	0
01	1	1	1	0
11	0	0	0	0
10	0	1	1	1

$$f(a,b,c,d) = \sum m(1,5,6,10,13,14)$$

$$= a'c'd + bc'd + bcd' + acd'$$

7.1 Multi-Level Gate Circuits

p. 202

- E.g.1 Obtain a 2-levels AND-OR circuit:

$$f(a,b,c,d) = \sum m(1,5,6,10,13,14)$$

$$= a'c'd + bc'd + bcd' + acd$$

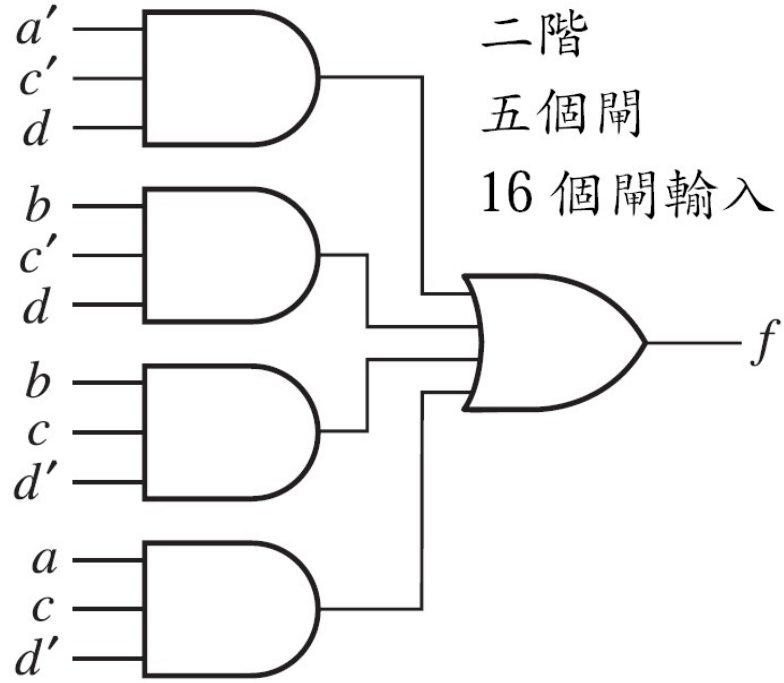

7.1 Multi-Level Gate Circuits p. 202

- E.g.1 Obtain another 2-levels AND-OR circuit:

$$f(a,b,c,d) =$$

$$= a'c'd + bc'd + bcd' + acd' = c'd(a' + b) + cd'(a + b)$$

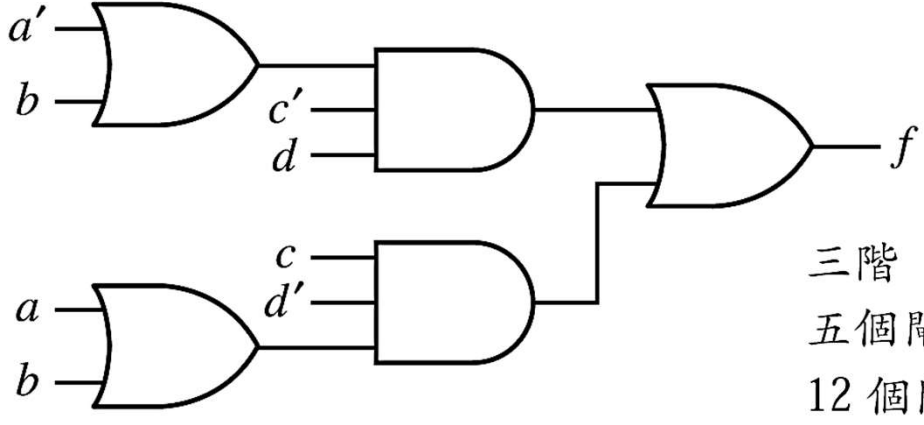

三階

五個閘

12 個閘輸入

7.1 Multi-Level Gate Circuits p. 202

- E.g.1 Obtain the following f by the 0's in Kaunaugh map:

$$f' = c'd' + ab'c' + cd + a'b'c \qquad (7-3)$$

$$f = (c+d)(a'+b+c)(c'+d')(a+b+c') \qquad (7-4)$$

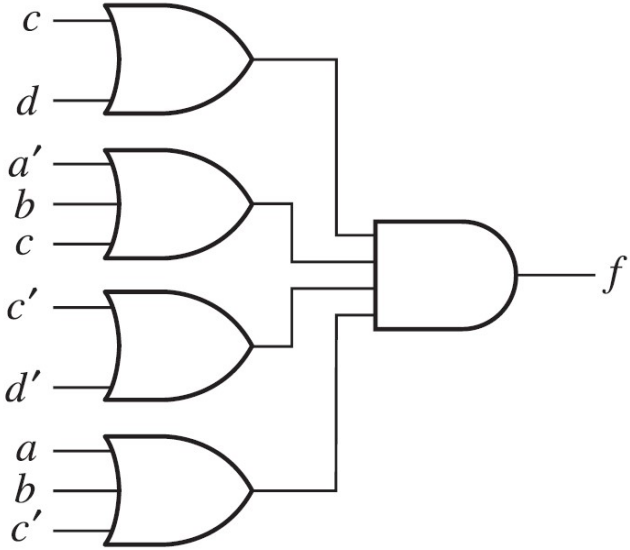

二階

五個閘

14 個閘輸入

7.1 Multi-Level Gate Circuits

p. 203

- E.g.1 Uses (X+Y)(X+Z)=X+YZ:

$$f = [c + d(a' + b)][c' + d'(a + b)] \qquad (7-5)$$

$$f = (c + a'd + bd)(c' + ad' + bd') \qquad (7-6)$$

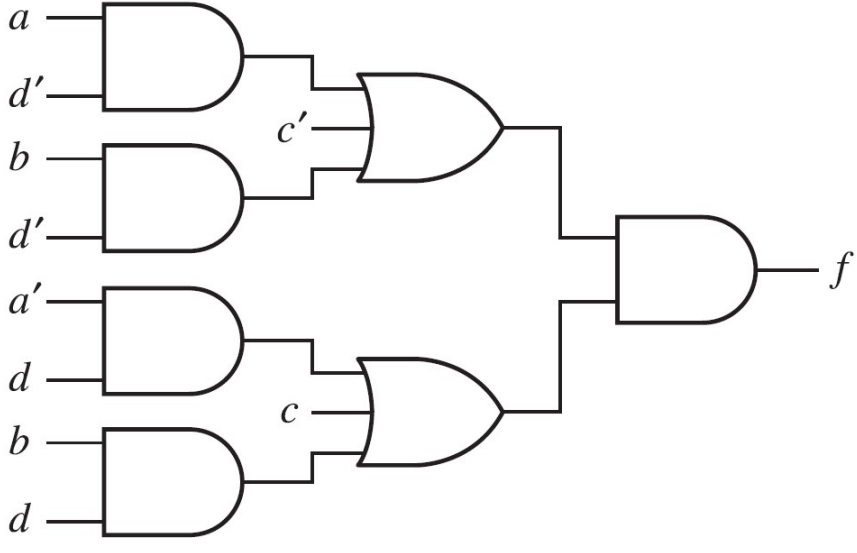

三階

七個閘

16 個閘輸入

7.1 Multi-Level Gate Circuits p. 203

- E.g.1 For this example, the best 2-levels design is the AND gates, and the best 3-levels design is the OR gates.

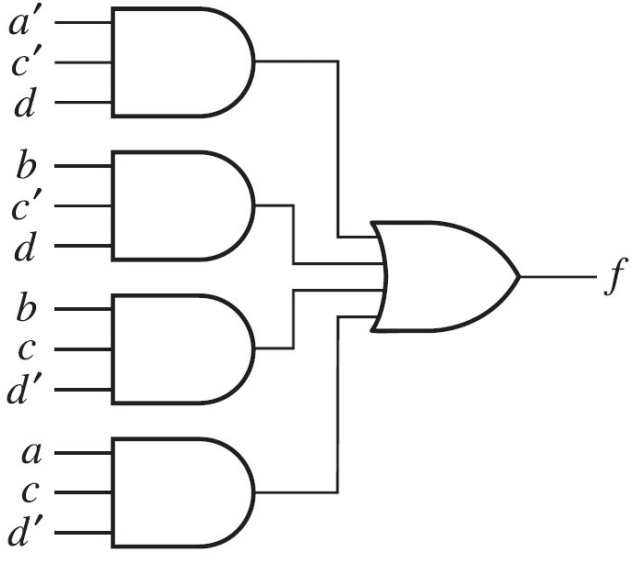

AND gates

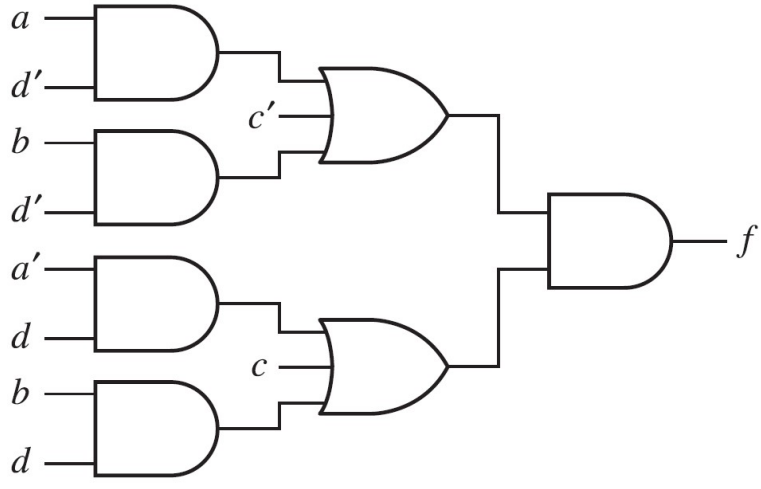

OR gates

7.2 NAND and NOR Gates

p. 204

- NAND gate: AND + NOT = NAND
- Output of NAND: $F = (ABC)' = A' + B' + C'$
- Output of NAND with N inputs:

$$F = (X_1 X_2 \ldots X_n)' = X'_1 + X'_2 + \ldots + X'_n \qquad (7-8)$$

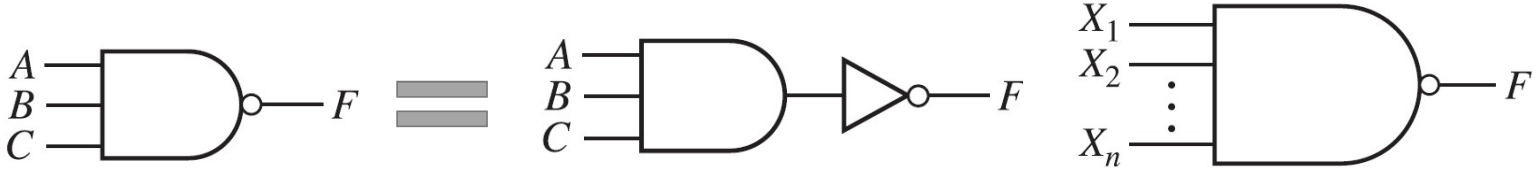

(a) 三輸入 NAND 閘　(b) 等效 NAND 閘　(c) n 輸入 NAND 閘

7.2 NAND and NOR Gates

p. 204

- Functionally complete (功能完備): A set of logic operations is said to be ***functionally complete*** if any Boolean function can be expressed in terms of this set of operations.
- The set AND, OR, and NOT is obviously functionally complete because any function can be expressed in SOP form, and a SOP expression uses only the AND, OR, and NOT operations.

7.2 NAND and NOR Gates

p. 205

- Because the set of operations AND, OR, and NOT is functionally complete, any set of logic gates which can realize AND, OR, and NOT is also functionally complete.
- For instance, AND and NOT are a functionally complete set of gates because OR can also be realized using AND and NOT :

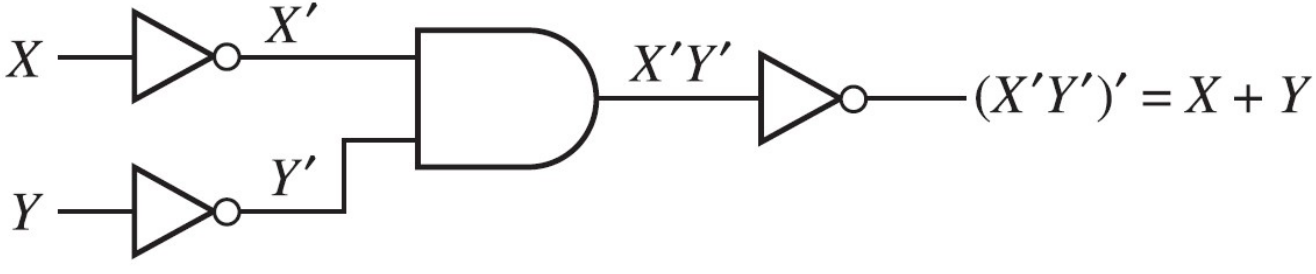

7.2 NAND and NOR Gates

p. 205

- If a single gate forms a functionally complete set by itself, then any switching function can be realized using only gates of that type.
- The NAND gate is an example of such a gate. NOT, AND, and OR can be realized using only NAND gates.

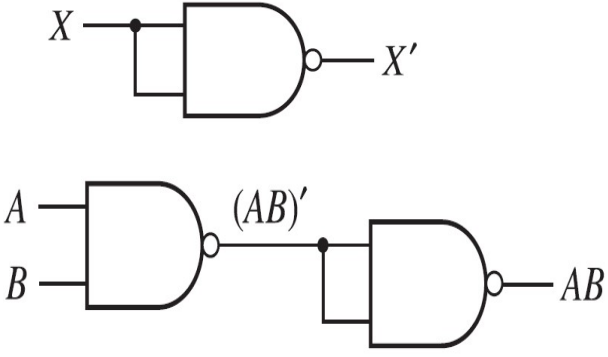

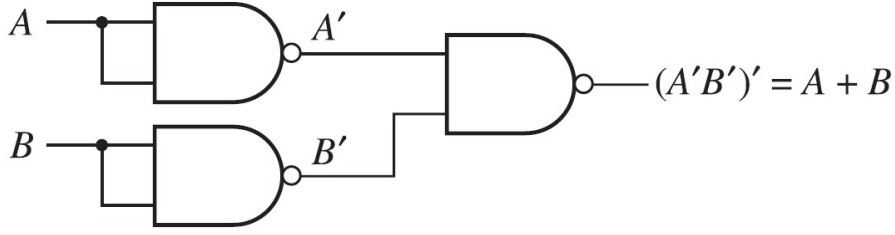

7.2 NAND and NOR Gates

p. 205

- **Determine if the logic set is functionally complete:**

1. Write a minimum SOP expression for the function realized by each gate. If no complement appears, then NOT cannot be realized; the set is not functionally complete.

2. Implement NOT: NOT can be realized by a choice of inputs to the corresponding gate. (e.g. NOT can be realized by NAND)

3. Implement AND, OR: Use DeMorhan's laws. e.g. if OR and NOT are available, AND can be realized by **XY= (X'+Y')'**

4. If the logic set can be implemented by NOT, AND, OR, it is functionally complete.

7.3 Design of 2-level NAND- and NOR- Gate Circuits

- A 2-level circuit composed of AND and OR gates is easily converted to a circuit composed of NAND gates or NOR gates.
- This conversion is carried out by using F = (F')' and then applying DeMorgan's laws:

$$(X_1 + X_2 + \cdots + X_n)' = X_1{}'X_2{}' \ldots X_n{}' \qquad (7-11)$$
$$(X_1X_2 \ldots X_n)' = X_1{}' + X_2{}' + \cdots + X_n{}' \qquad (7-12)$$

p. 206

7.3 Design of 2-level NAND- and NOR- Gate Circuits

p. 206

- The following example illustrates conversion of a minimum sum-of-products form to several other two-level forms.

$$F = A + BC' + B'CD = [(A + BC' + B'CD)']' \qquad (7-13)$$
$$= [A' \cdot (BC')' \cdot (B'CD)']' \qquad \text{（由 (7−11) 式）} \quad (7-14)$$
$$= [A' \cdot (B' + C) \cdot (B + C' + D')]' \qquad \text{（由 (7−12) 式）} \quad (7-15)$$
$$= A + (B' + C)' + (B + C' + D')' \qquad \text{（由 (7−12) 式）} \quad (7-16)$$

- Equations (7-13), (7-14), (7-15) and (7-16) represent the AND-OR, NAND-NAND, OR-NAND, and NOR-OR forms, respectively, as shown in Fig. 7-11.

p. 207

7.3 Design of 2-level NAND- and NOR-Gate Circuits

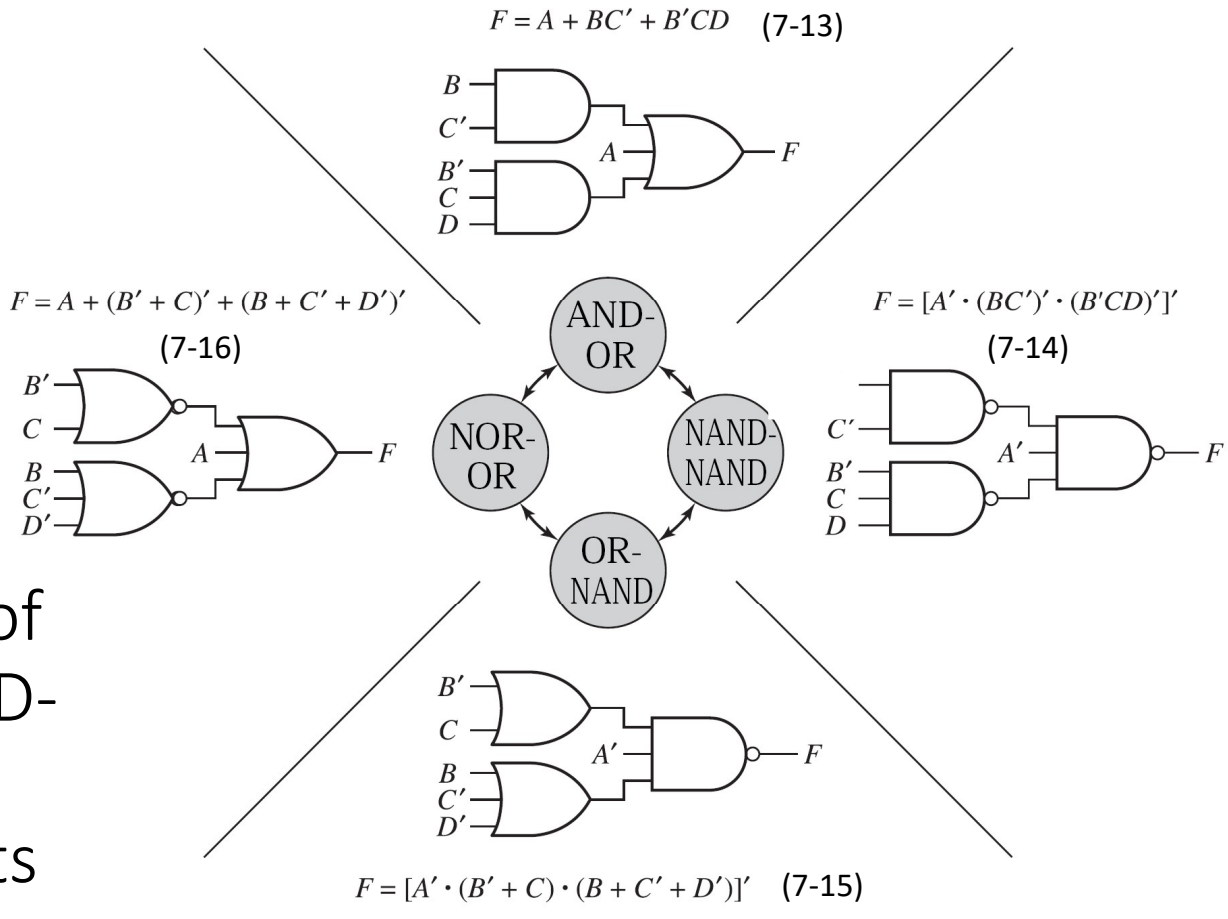

7.3 Design of 2-level NAND- and NOR- Gate Circuits

- After obtaining the minimum product of sums from a Karnaugh map, F can be written in the 2-level forms:

$$
\begin{aligned}
F &= (A+B+C)(A+B'+C')(A+C'+D) && (7-18)\\
&= \{[(A+B+C)(A+B'+C')(A+C'+D)]'\}' \\
&= [(A+B+C)'+(A+B'+C')'+(A+C'+D)']' && \text{（由 (7−12) 式）} \quad (7-19)\\
&= (A'B'C'+A'BC+A'CD')' && \text{（由 (7−11) 式）} \quad (7-20)\\
&= (A'B'C')'\cdot(A'BC)'\cdot(A'CD')' && \text{（由 (7−11) 式）} \quad (7-21)
\end{aligned}
$$

- Equations (7-18), (7-19), (7-20) and (7-21) represent the AND-OR, NAND-NAND, OR-NAND, and NOR-OR forms, respectively, as shown in Fig. 7-11.

p. 206

p. 207

7.3 Design of 2-level NAND- and NOR-Gate Circuits

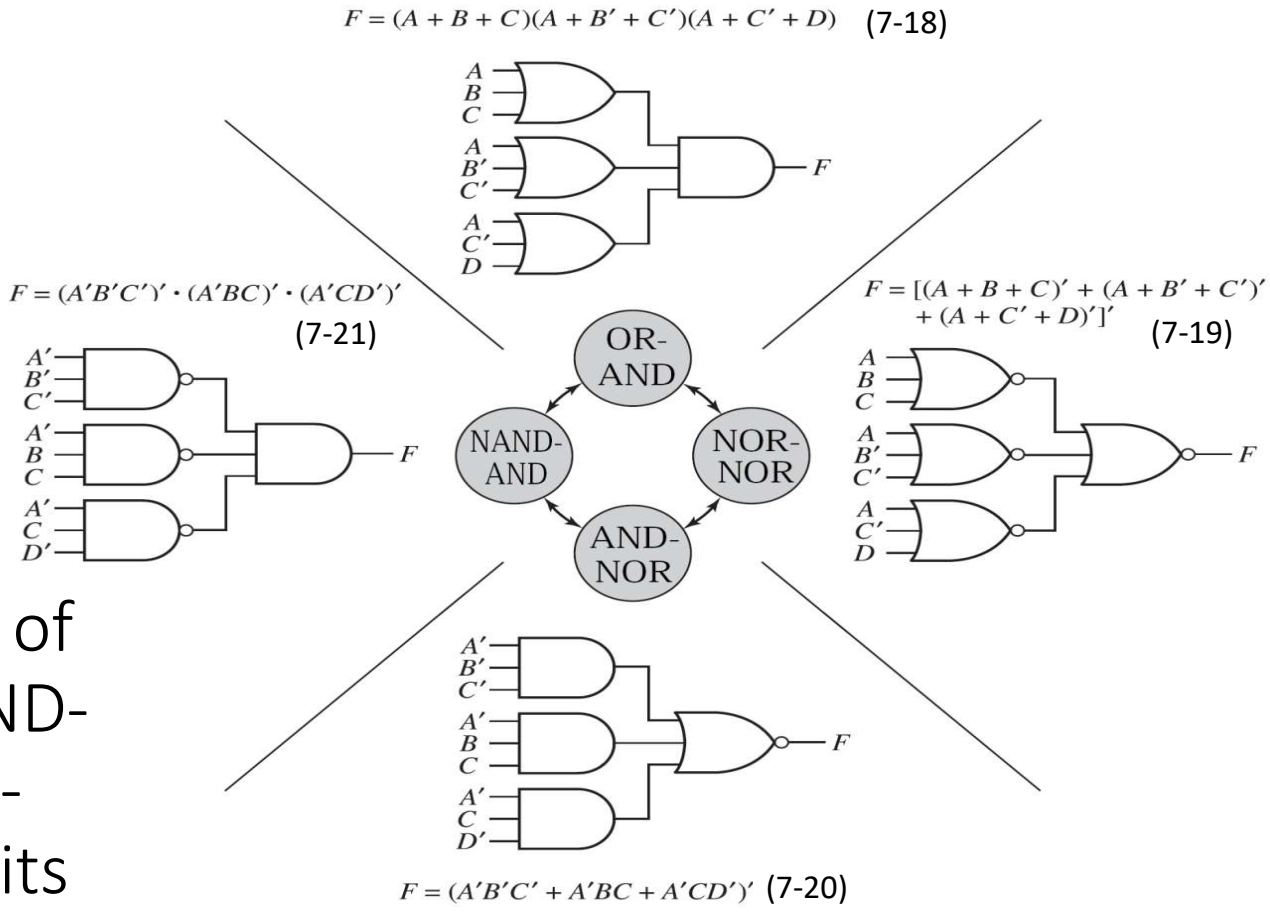

7.3 Design of 2-level NAND- and NOR- Gate Circuits

- The other eight possible 2-level forms (AND-AND, OR-OR, OR-NOR, AND-NAND, NAND-NOR, NOR-NAND) are degenerate (退化) in the sense that they cannot realize all switching functions. Consider, the NAND-NOR circuit:

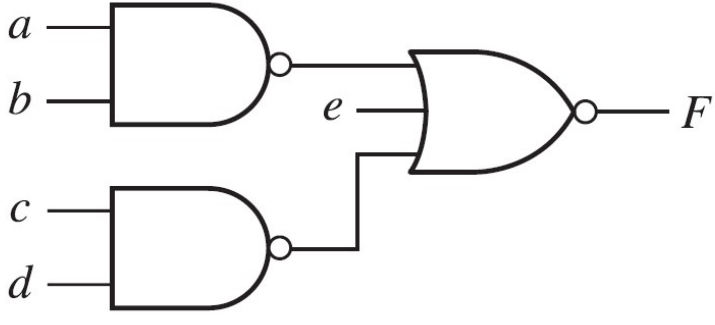

$$F = [(ab)' + (cd)' + e]' = abcde'$$

- The NAND-NOR form can realize only a product of literals and not a SOP form.

p. 208

7.3 Design of 2-level NAND- and NOR- Gate Circuits

- Procedure for designing a minimum 2-level NAND-NAND circuit:

1. Find a minimum SOP form for F.
2. Draw the 2-level AND-OR circuit.
3. Replace all gates with NAND gates leaving the gate interconnection unchanged. If the output gate has any single literals as inputs, complement these literals.

p. 208

7.3 Design of 2-level NAND- and NOR- Gate Circuits

p. 208

- In general, F is a sum of literals (l_1, l_2,…) and product terms (P_1, P_2,…):

$$F = \ell_1 + \ell_2 + \cdots P_1 + P_2 + \cdots$$

- Applying DeMorgan's Law:

$$F = (\ell_1{}'\ell_2{}'\cdots P_1{}'P_2{}'\cdots)'$$

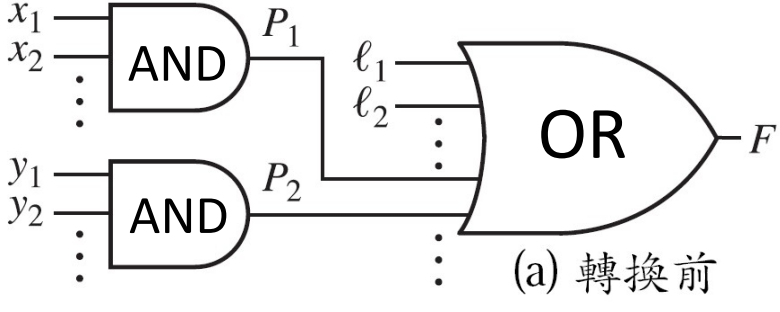

(a) 轉換前

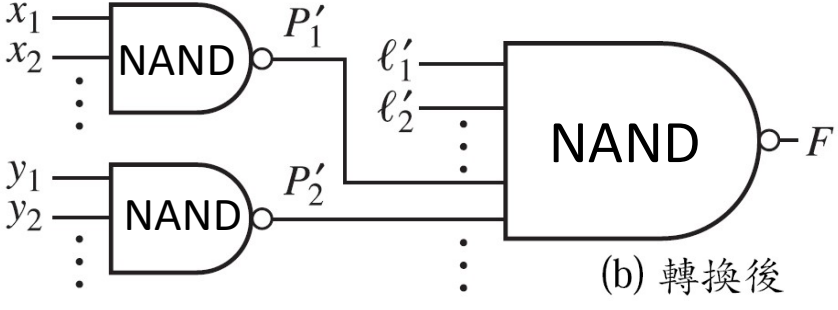

(b) 轉換後

7.3 Design of 2-level NAND- and NOR- Gate Circuits

- Procedure for designing a minimum 2-level NOR-NOR circuit:

1. Find a minimum POS form for F.
2. Draw the 2-level OR-AND circuit.
3. Replace all gates with NOR gates leaving the gate interconnection unchanged. If the output gate has any single literals as inputs, complement these literals.

p. 209

7.4 Design of Multi-level NAND- and NOR- Gate Circuits

- Procedure for designing a minimum multi-level NAND circuit:

1. Simplify the switching function to be realized.
2. Design a multi-level circuit of AND and OR gates. The output must be OR. AND-gate outputs cannot be used as AND-gate inputs; OR-gate outputs cannot be used as OR-gate inputs.
3. Number the levels starting with the output gate as lv. 1. Replace all gates with inputs to lv. 2, 4, 6,… unchanged. Inver any literals which appear as inputs to lv. 1, 3, 5…

p. 209

7.4 Design of Multi-level NAND- and NOR-Gate Circuits

- e. g. $F_1 = a'[b' + c(d + e') + f'g'] + hi'j + k$

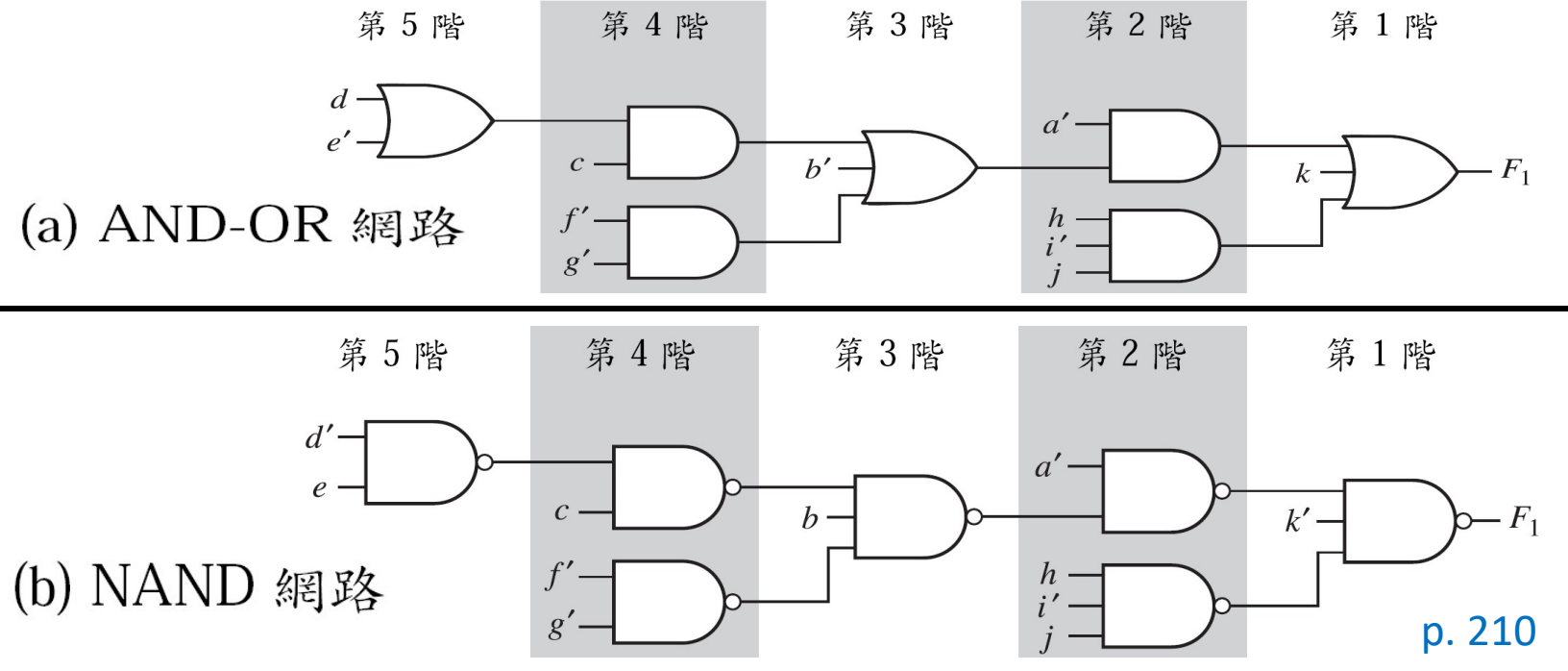

p. 210

7.5 Circuit Conversion Using Alternative Gate Symbols

●反相器：

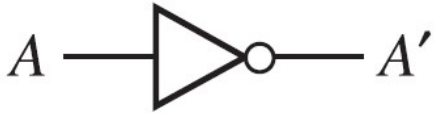

或

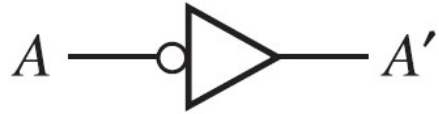

●AND、OR、NAND和NOR閘：

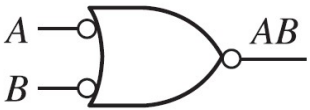

$AB = (A' + B')'$

(a) AND

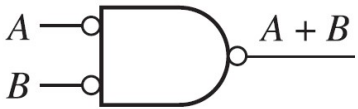

$A + B = (A'B')'$

(b) OR

$(AB)' = A' + B'$

(c) NAND

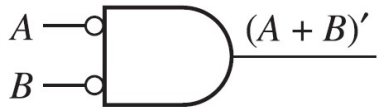

$(A + B)' = A'B'$

(d) NOR

p. 210

7.5 Circuit Conversion Using Alternative Gate Symbols

p. 210

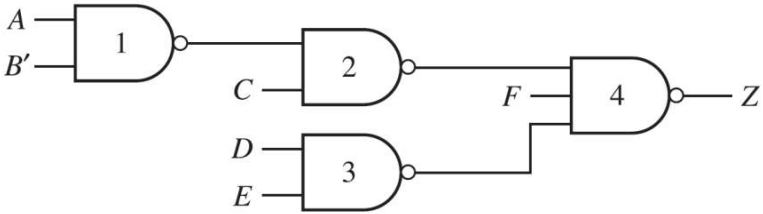

(a) NAND 閘網路

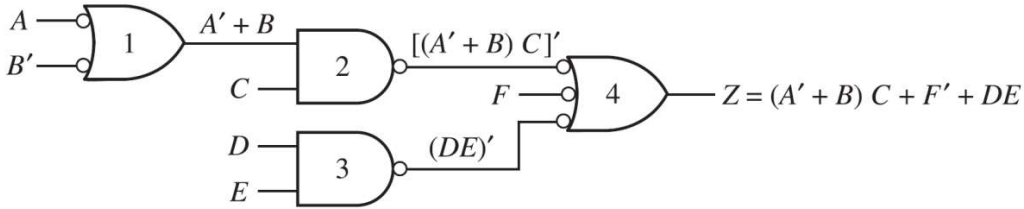

(b) NAND 閘網路的另一種形式

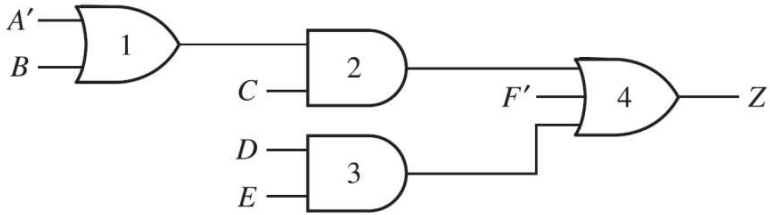

(c) 等效的 AND-OR 網路

7.5 Circuit Conversion Using Alternative Gate Symbols

p. 211

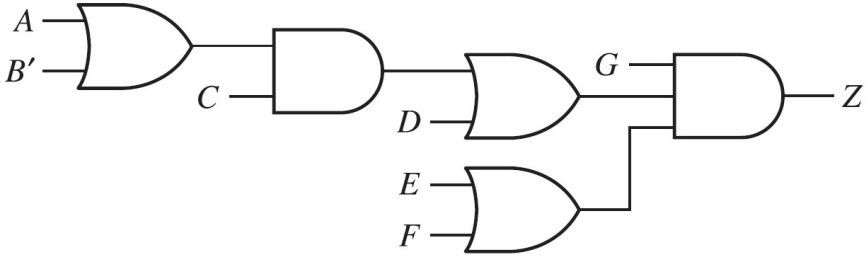

(a) 具有 OR 和 AND 閘的電路

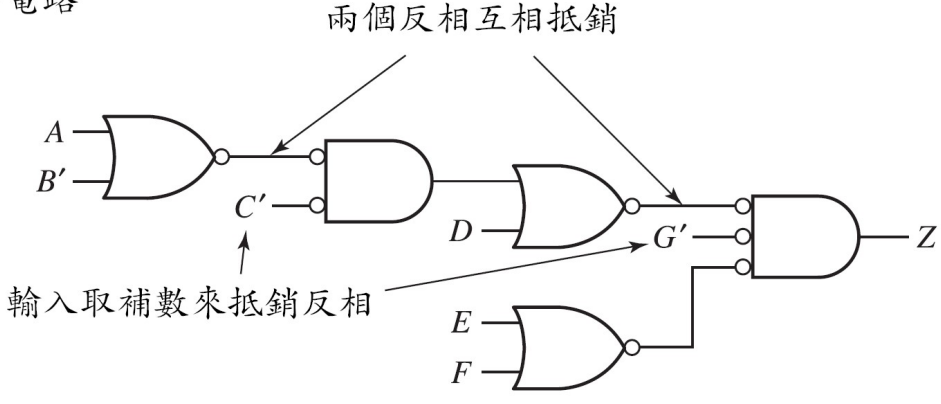

(b) 等效 NOR 閘電路

7.5 Circuit Conversion Using Alternative Gate Symbols

p. 211

- Even if AND and OR gates do not alternate, we can still convert an AND-OR circuit to a NAND or NOR circuit, but it may be necessary to add extra inverters so that each added inversion is cancelled by another inversion.

7.5 Circuit Conversion Using Alternative Gate Symbols p. 212

- The following procedure may be used to convert to a NAND (or NOR) circuit:
  - **1.** Convert all AND gates to NAND gates by adding an inversion bubble at the output. Convert all OR gates to NAND gates by adding inversion bubbles at the inputs. (To convert to NOR, add inversion bubbles at all OR gate outputs and all AND gate inputs.)
  - **2.** Whenever an inverted output drives an inverted input, no further action is needed because the two inversions cancel.
  - **3.** Whenever a noninverted gate output drives an inverted gate input or vice versa, insert an inverter so that the bubbles will cancel. (Choose an inverter with the bubble at the input or output as required.)
  - **4.** Whenever a variable drives an inverted input, complement the variable (or add an inverter) so the complementation cancels the inversion at the input.

7.5 Circuit Conversion Using Alternative Gate Symbols

- E.g. 1

p. 212

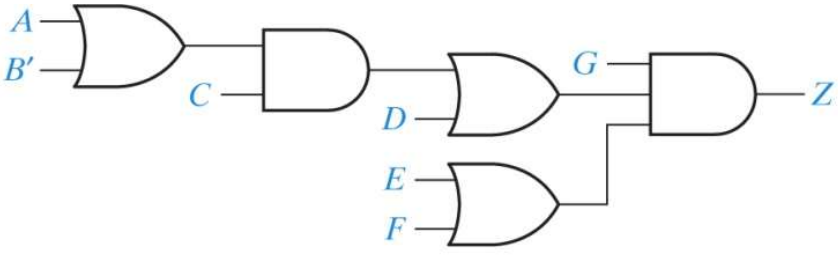

(a) Circuit with OR and AND gates

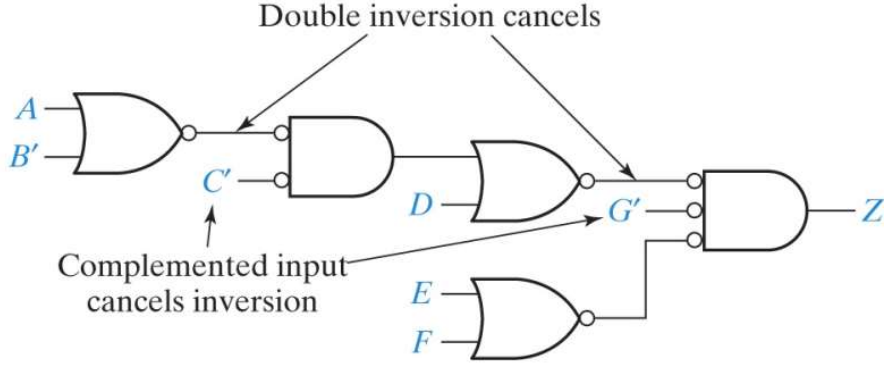

(b) Equivalent circuit with NOR gates

7.5 Circuit Conversion Using Alternative Gate Symbols

- E.g. 2

p. 212

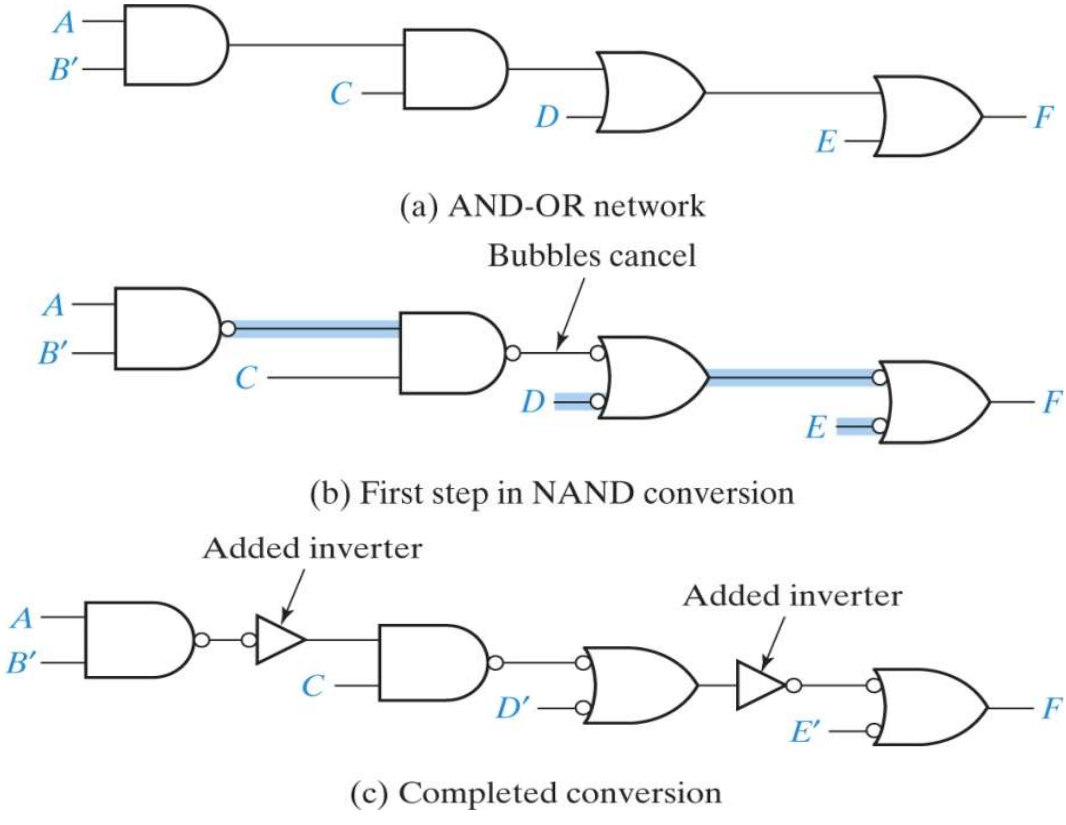

(a) AND-OR network

(b) First step in NAND conversion

(c) Completed conversion

7.5 Circuit Conversion Using Alternative Gate Symbols

- E.g. 3

p. 213

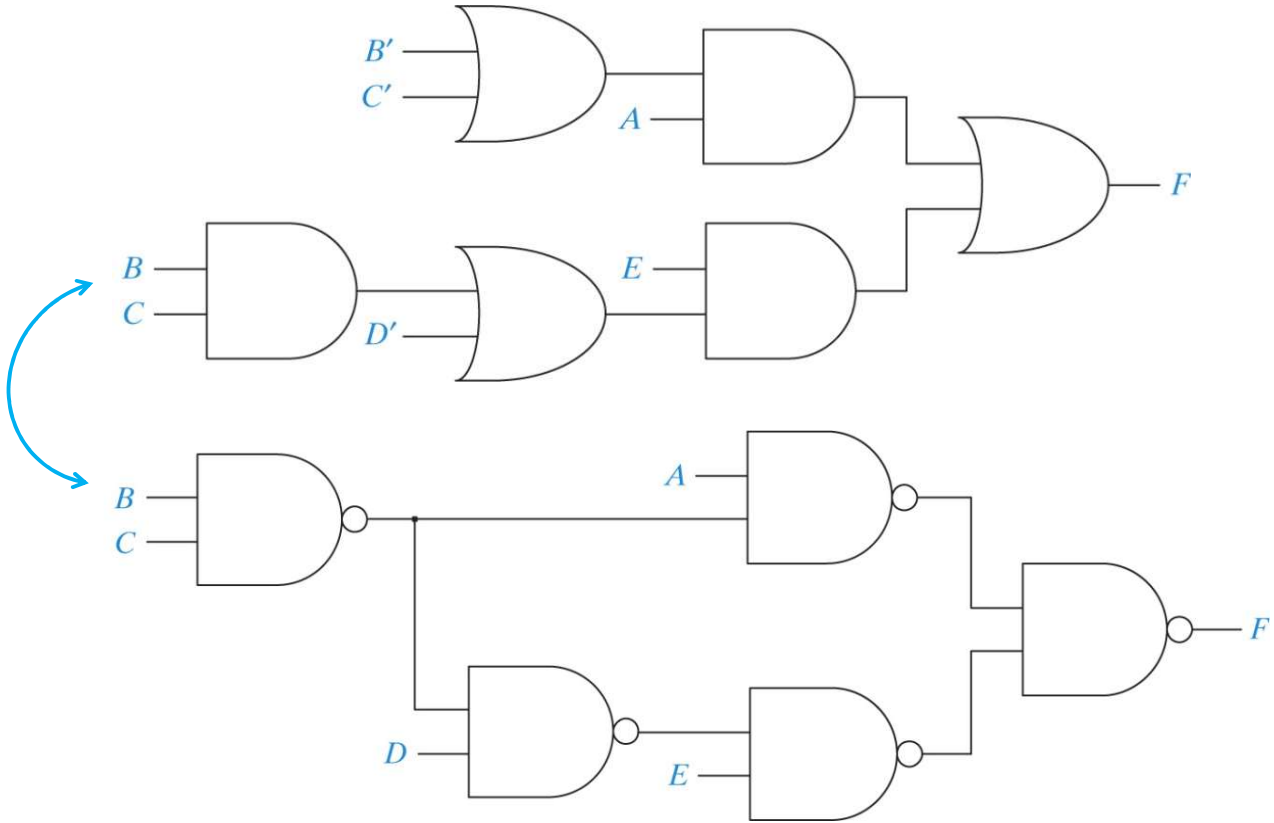

7.6 Design of 2-level, Multiple-output Circuits

p. 214

- e. g. 1

$$F_1(A,B,C,D) = \sum m(11,12,13,14,15)$$

$$F_2(A,B,C,D) = \sum m(3,7,11,12,13,15) \quad (7\text{-}24)$$

$$F_3(A,B,C,D) = \sum m(3,7,12,13,14,15)$$

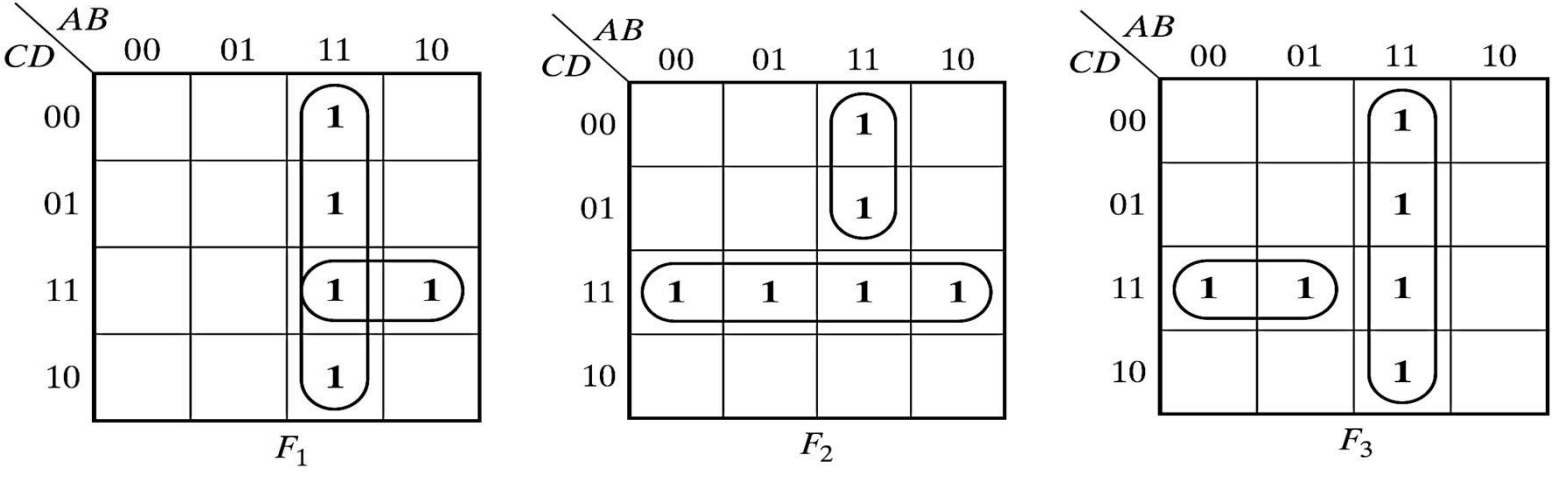

7.6 Design of 2-level, Multiple-output Circuits

CD \ AB	00	01	11	10
00			1	
01			1	
11			1	1
10			1	

F_1

CD \ AB	00	01	11	10
00			1	
01			1	
11	1	1	1	1
10				

F_2

CD \ AB	00	01	11	10
00			1	
01			1	
11	1	1	1	
10			1	

F_3

$F_1 = AB + ACD$

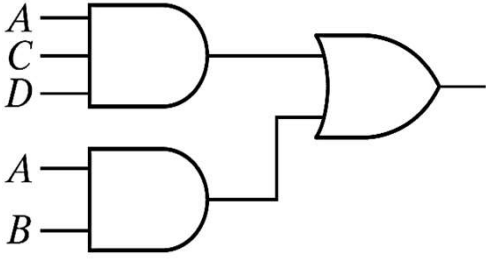

$F_2 = ABC' + CD$

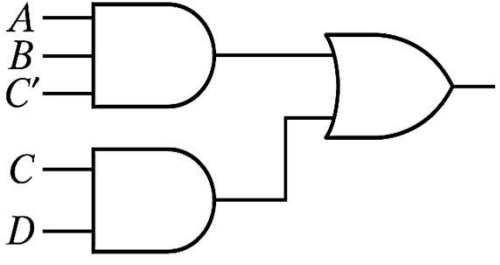

$F_3 = A'CD + AB$

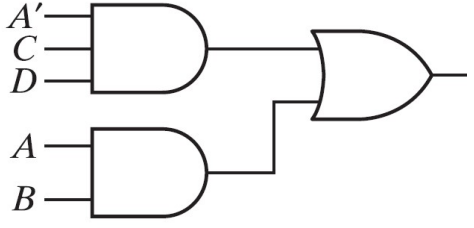

p. 215

7.6 Design of 2-level, Multiple-output Circuits

p. 215

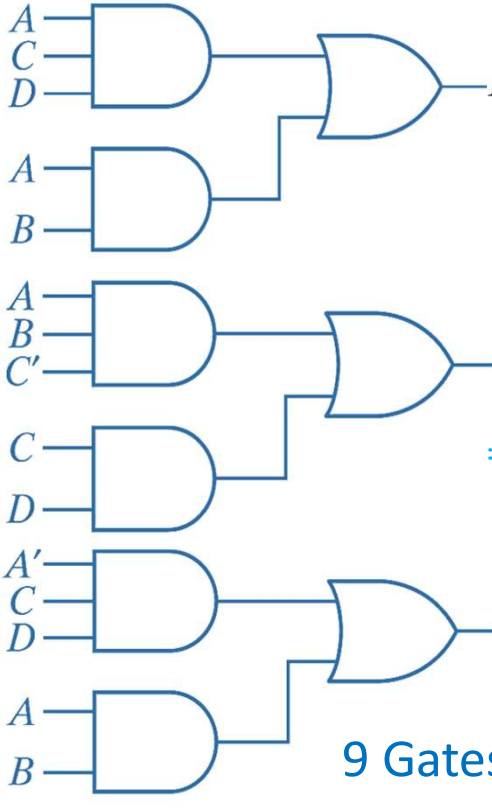

$F_1 = AB + ACD$

$F_2 = ABC' + CD$

$=ABC'+A'CD+ACD$

$F_3 = A'CD + AB$

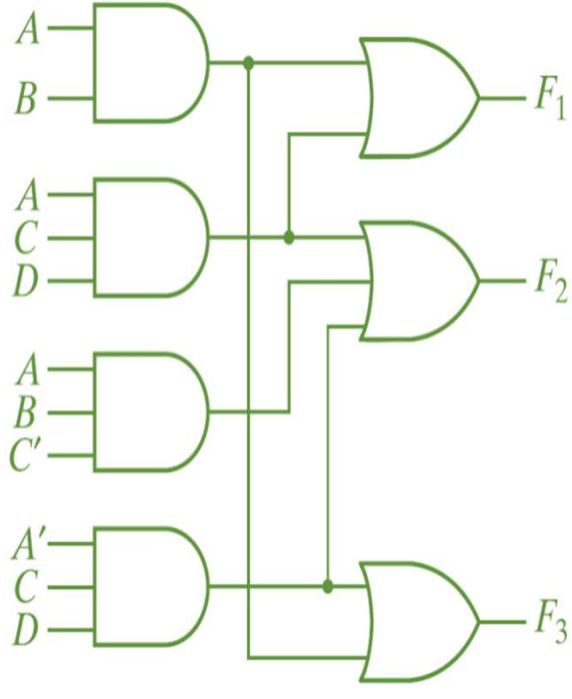

9 Gates with 21 inputs

7 Gates with 18 inputs

7.6 Design of 2-level, Multiple-output Circuits

- e. g. 2 A 4-input, 3-output circuit to realize *f's*:

$$f_1 = \sum m(2,3,5,7,8,9,10,11,13,15)$$

$$f_2 = \sum m(2,3,5,6,7,10,11,14,15) \qquad (7\text{-}24)$$

$$f_3 = \sum m(6,7,8,9,13,14,15)$$

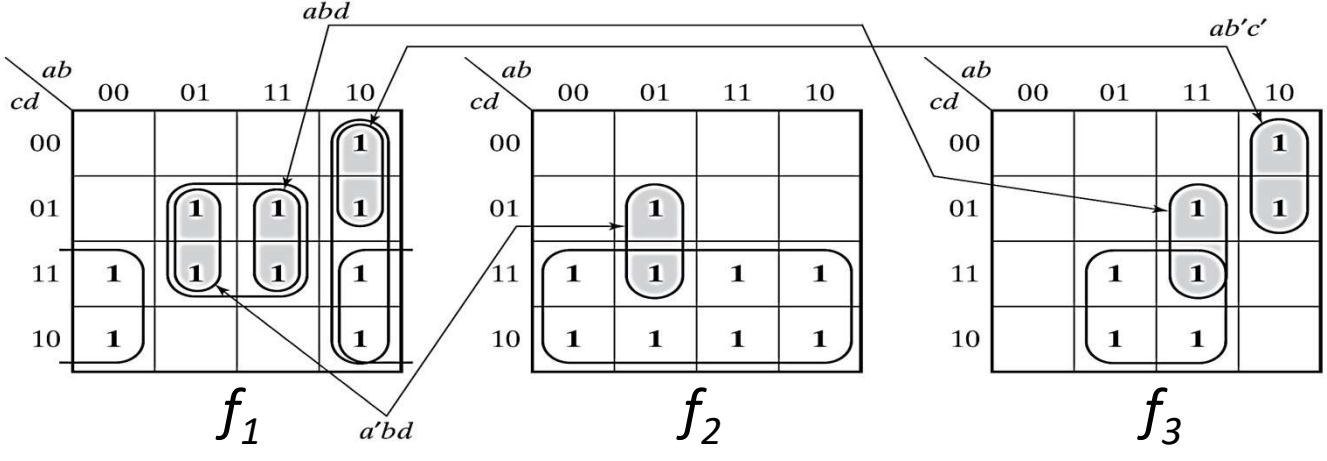

p. 215

7.6 Design of 2-level, Multiple-output Circuits

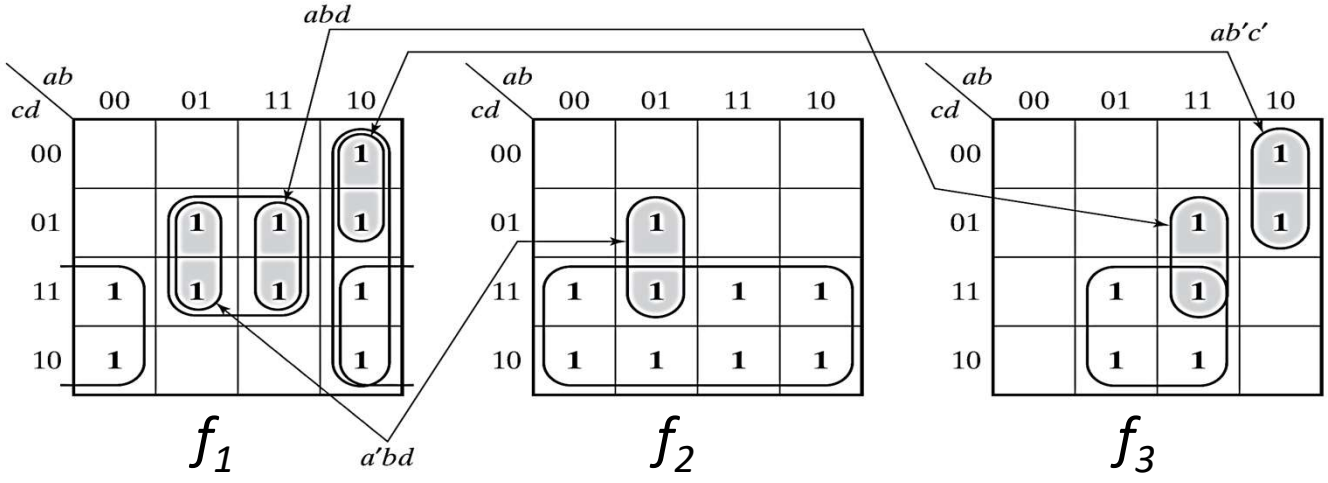

$$f_1 = bd + b'c + ab' \quad f_2 = c + a'bd \quad f_3 = bc + ab'c' + \left\{ \begin{matrix} abd \\ 或 \\ ac'd \end{matrix} \right\}$$

十個閘　　25個閘輸入

p. 216

7.6 Design of 2-level, Multiple-output Circuits

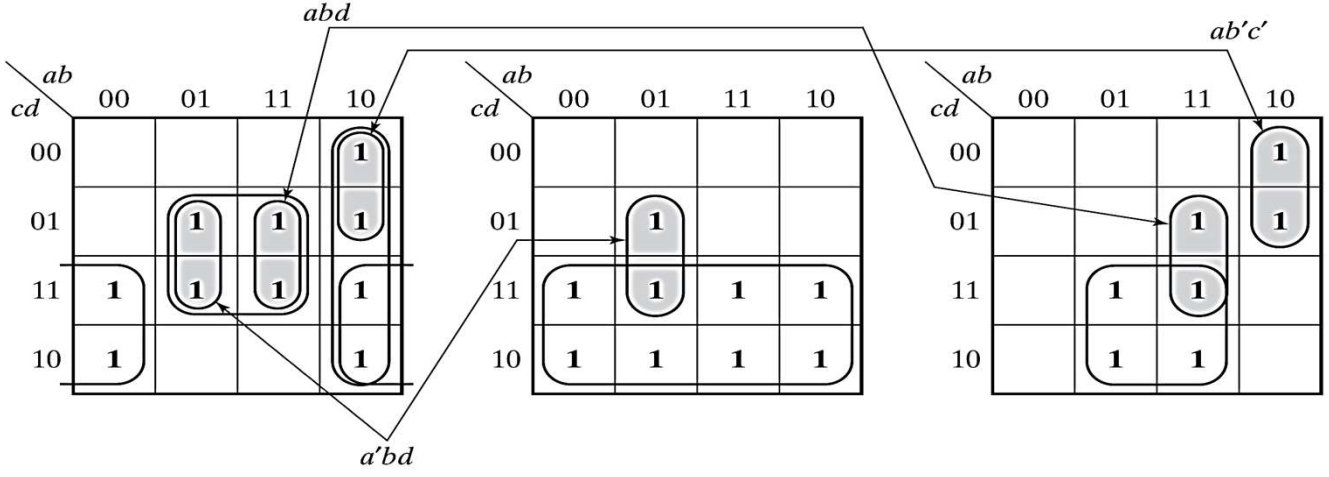

$$f_1 = \underline{a'bd} + \underline{abd} + \underline{ab'c'} + b'c$$

$$f_2 = c + \underline{a'bd}$$

八個閘

$$f_3 = bc + \underline{ab'c'} + \underline{abd}$$

22個閘輸入

p. 216

7.6 Design of 2-level, Multiple-output Circuits

p. 216

$$f_1 = bd + b'c + ab'$$

$$f_2 = c + a'bd$$

$$f_3 = bc + ab'c' + \left\{ \begin{array}{c} abd \\ \text{或} \\ ac'd \end{array} \right\}$$

十個閘

25個閘輸入

$$f_1 = a'bd + abd + ab'c' + b'c$$

$$f_2 = c + a'bd$$

八個閘

$$f_3 = bc + ab'c' + abd$$

22個閘輸入

7.6 Design of 2-level, Multiple-output Circuits

- e. g. 2 When designing multiple output circuits, it is sometimes best not to merge 1 with adjacent 1.

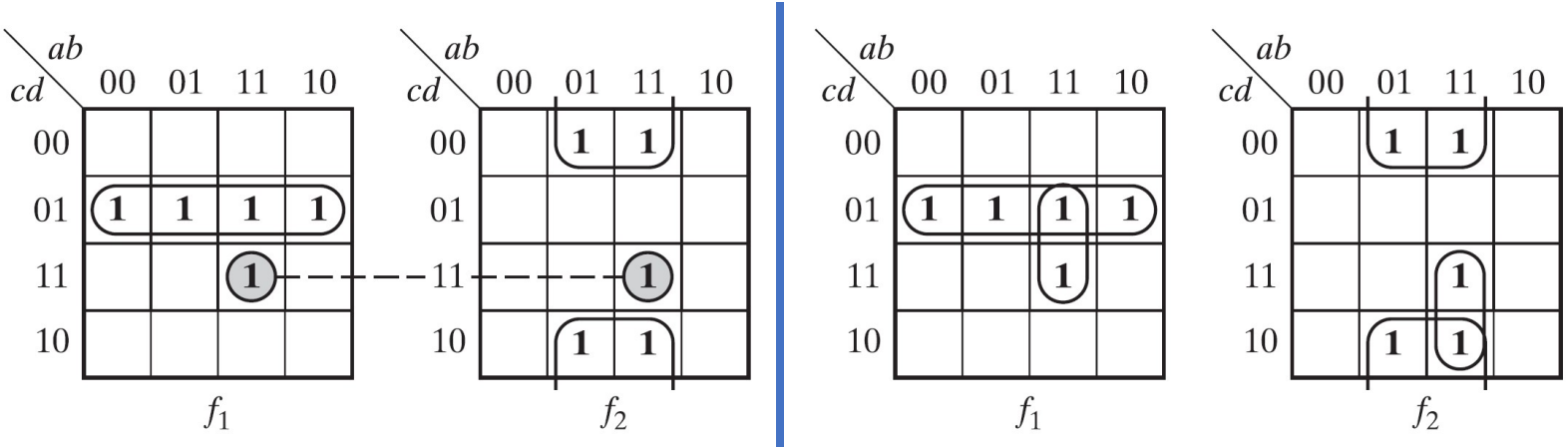

(a) 最佳解

(b) 需要額外閘的解

p. 217

7.6 Design of 2-level, Multiple-output Circuits

- e. g. 3 The solution with the maximum numbers of common items is not necessarily the best solution.

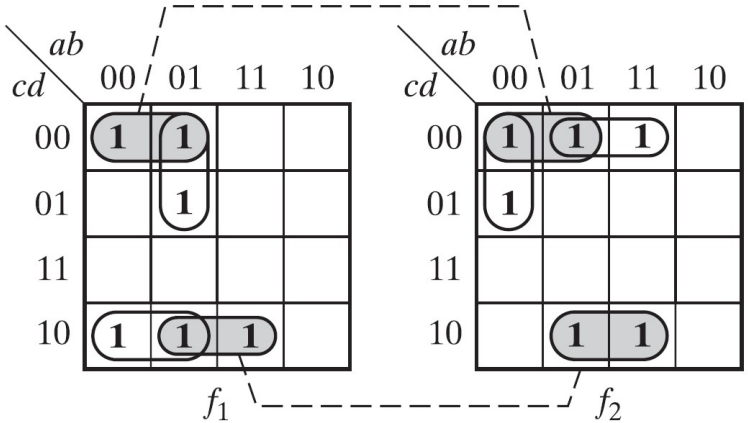

(a) 共同項最多的解
需要八個閘、26 個閘輸入

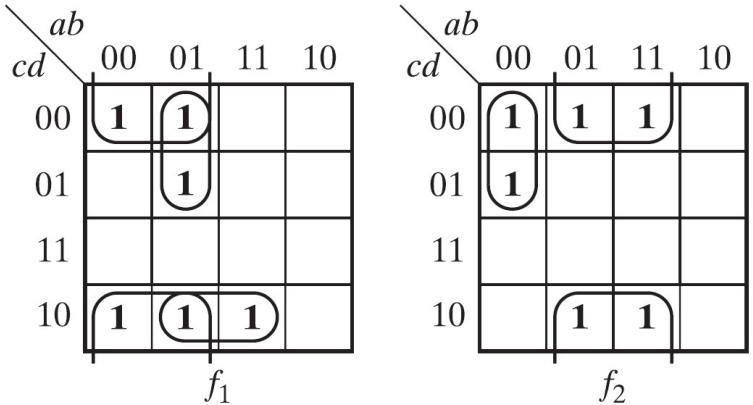

(b) 最佳解需要七個閘、
18 個閘輸入且沒有共同項

p. 217

7.7 Design of Multi-level NAND- and NOR- Gate Circuits

p. 217

- Procedure for designing a minimum multi-level NOR circuit:

1. Simplify the switching function to be realized.
2. Design a multi-level circuit of AND and OR gates. The output must be AND. AND-gate outputs cannot be used as AND-gate inputs; OR-gate outputs cannot be used as OR-gate inputs.
3. Number the levels starting with the output gate as lv. 1. Replace all gates with inputs to lv. 2, 4, 6,… unchanged. Inver any literals which appear as inputs to lv. 1, 3, 5…

7.7 Design of Multi-level NAND- and NOR-Gate Circuits

- e. g. $F_1 = [(a+b')c+d](e'+f)$ $F_2 = [(a+b')c+g'](e'+f)h$

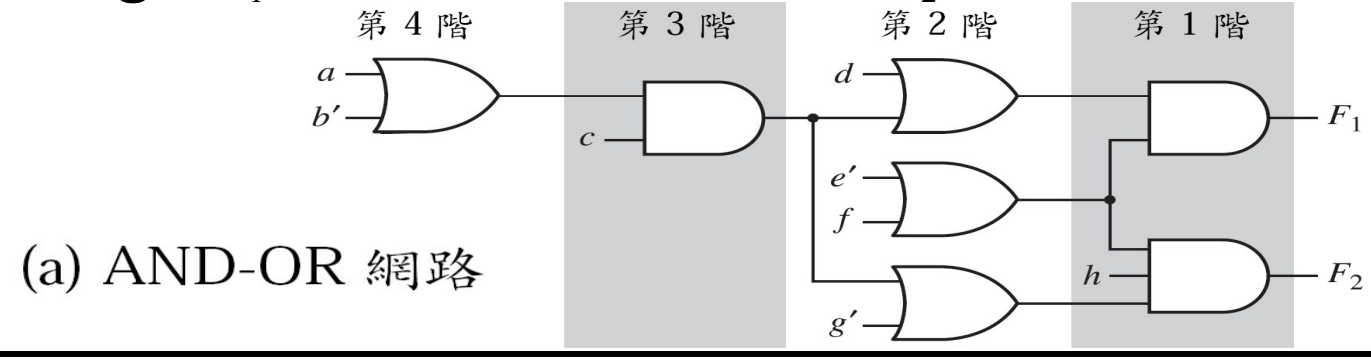

(a) AND-OR 網路

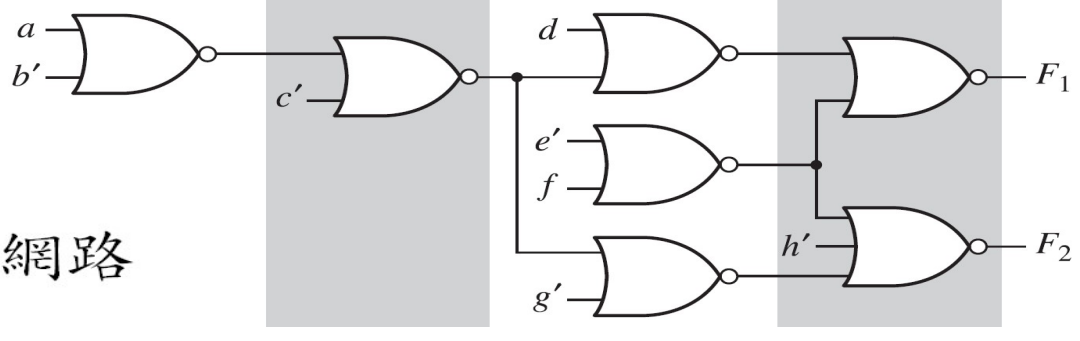

(b) NOR 網路

p. 218